LIST No. 3040

FOUR 99 VEHICLE ENGINES

OCTOBER, 1959

19 NOV 1962

LIST No. 3040
2nd Revision
OCTOBER 1959

Perkins

DIESEL ENGINES

PARTS LIST

APPLICABLE TO

FOUR 99 VEHICLE ENGINES

COMMENCING ENGINE NUMBER 7000251

PRICE 5/- NETT

PERKINS ENGINES LIMITED,
PETERBOROUGH, ENGLAND.
Telephone and Telegrams:
Peterborough 3241 Parts and Service Dept.
Peterborough 5341 Export and Sales Dept.
Peterborough 67474 Head Office.
Cables:
'Perkoil,' Peterborough, Telex.

INTRODUCTION

TO ALL USERS OF THIS PUBLICATION

This parts list has been published for the special benefit of the operator to simplify the servicing of parts for Perkins Four 99 Vehicle Engines commencing Engine Number 7000251.

As much detail as possible has been incorporated in this list, and if the procedure outlined below is followed, supplies will be obtained with the minimum of delay.

SOURCE OF SUPPLY

Parts are available from the following sources :—

1. The distributive organisations of vehicle manufacturers installing this engine as first equipment.
2. Approved Perkins service signholders and overseas distributors.
3. Recognised motor traders.

We are unable to deal with operators direct from the factory, and therefore supplies should be obtained by placing firm orders with one of the aforementioned sources of supply. To ensure you obtain the best results from your engine and to safeguard your own guarantee, fit only genuine Perkins Parts. These are readily obtainable throughout the world.

INFORMATION REQUIRED

Whenever parts are ordered it is essential that full information is given to the supplier to enable him to identify your requirements. Complete descriptions and part numbers should always be stated, and in the case of parts required for an individual engine, the engine type and serial number with vehicle details must be included.

SPECIAL PARTS

This list covers only standard Four 99 Vehicle Engine parts and does not incorporate conversion or special parts supplied with engines. Supplements covering certain vehicles are published, but if a supplement is not available, you should as in all instances quote full details outlined above to ensure that you receive the correct parts.

INTRODUCTION, Contd.

SPECIAL SERVICE

We are as anxious to give you good service as you are to receive it. Letters addressed to PARTS DEPARTMENT recording difficulties experienced in obtaining the correct parts within a reasonable period, will be the subject of immediate enquiry. This is a special service which we hope you will use should the necessity arise, for in addition to solving your particular problem it will help towards the improvement of our parts distribution as a whole.

ENGINE IDENTIFICATION

The Engine Number is to be found stamped vertically on the right hand side of the Cylinder Block on the Rear End of the Tappet Inspection Cover Face, or on the left hand side of the Cylinder Block on the Fuel Pump Mounting Flange Face.

SCREW THREADS

All screw threads on this engine, except on certain items of proprietary equipment and the Crankshaft, are unified series and American pipe series.

The items illustrated and described in this parts list are correct at the time of publication, but as developments are made we reserve the right to alter or withdraw items without notice.

INDEX

SECTION "A" CYLINDER BLOCK.
Including :—
Liners ; plugs ; studs ; crankshaft rear end cover and seal ; tappet inspection cover ; windscreen wiper driving face blanking plate ; lub. oil dipstick and engine front mounting plate 5

SECTION "B" CYLINDER HEAD.
Including :—
Plugs ; studs ; guides ; valves ; springs ; combustion chamber inserts ; lifting plates ; thermostat and exhaust manifold 9

SECTION "C" CRANKSHAFT.
Including :—
Gear ; key ; flange ; pulley ; main bearings ; connecting rods ; big end bearings and pistons 11

SECTION "D" CYLINDER HEAD COVER.
Including :—
Lub. oil filler cap ; rocker shaft ; springs ; brackets ; levers ; tappets and associate parts 13

SECTION "E" AIR INDUCTION SYSTEM.
Including :—
Air filter ; adaptor and fittings ; induction manifold ; heater and cold starting fuel oil container 15

SECTION "F" TIMING GEAR.
Including :—
Camshaft ; gears ; housing and associate parts 17

SECTION "G" LUBRICATING OIL SYSTEM.
Including :—
Filter ; pump ; suction and delivery pipes ; sump and strainer 19

SECTION "H" WATER PUMP.
Including :—
Fan 23

SECTION "I" FUEL OIL INJECTION EQUIPMENT.
Including :—
Injection pump ; shaft ; driving gear ; pipes ; atomisers ; lift pump and filter ... 25

SECTION "J" ELECTRICAL EQUIPMENT.
Including :—
Dynamo ; pulley ; belt ; support bracket and adjusting lever 31

SECTION "K" JOINTS AND GASKETS (SETS) 32

NUMERICAL INDEX 33

IMPORTANT

For Specification of Screw Threads—See Introduction
Always quote Engine Number when ordering Parts

FIT ONLY GENUINE PERKINS PARTS

Plate "A"

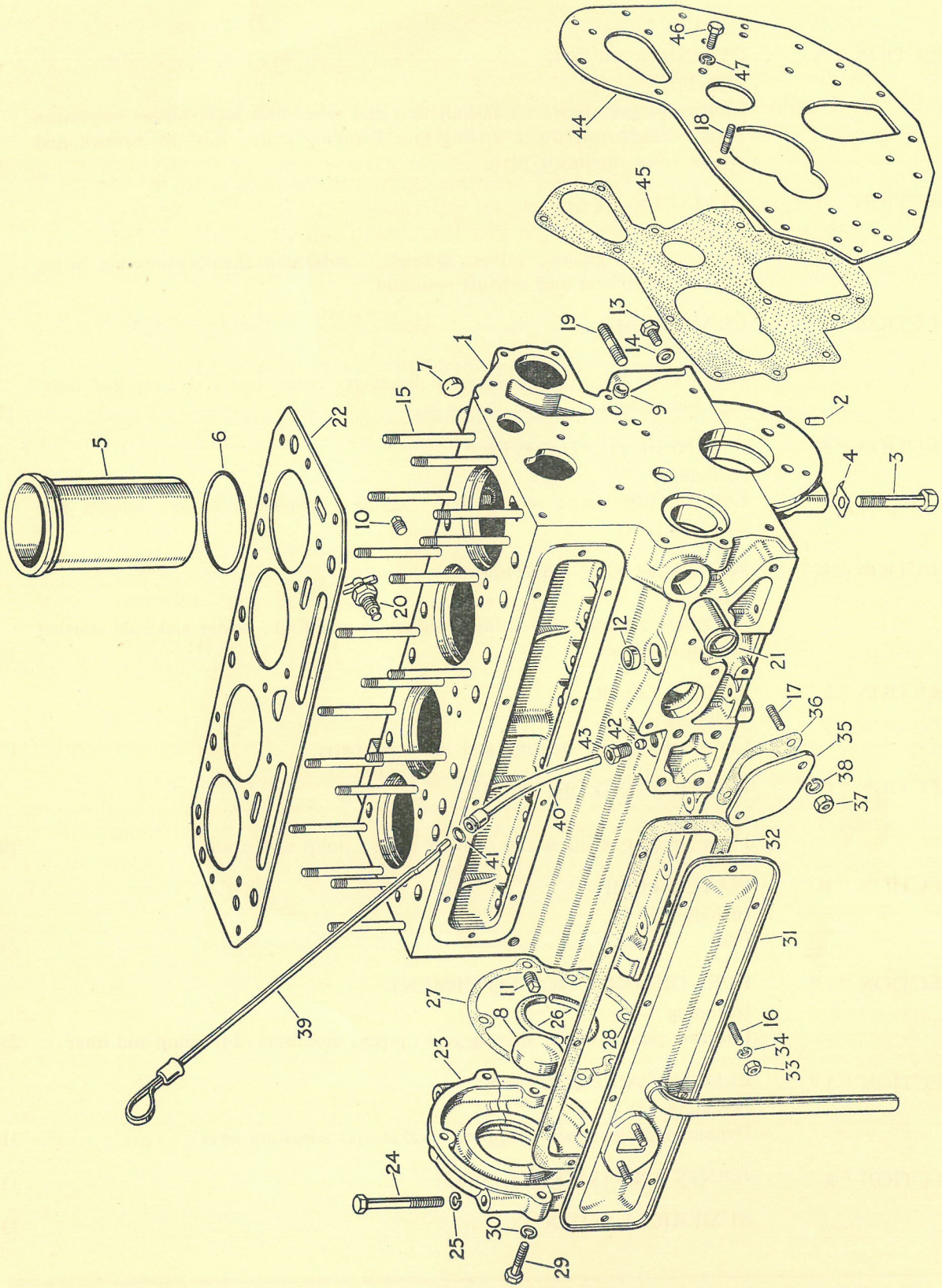
1
2
3
4
5
6
7
8
9
10
11
12
13
14
15
16
17
18
19
20
21
22
23
24
25
26
27
28
29
30
31
32
33
34
35
36
37
38
39
40
41
42
43
44
45
46
47

SECTION "A"

Cylinder Block

Ref. No.	Part No.	Description	Qty. Per Engine	Remarks
1	**55280**	CYLINDER BLOCK (ASSEMBLY)	1	Prior to Eng. No. 7003113. Obsolete—Use service replacement block (Assembly) 57238. See Note *
	56191	CYLINDER BLOCK (ASSEMBLY)	1	Eng. No. 7003113 onwards
		Including :—		
		Cap, crankshaft main bearing—Front		Not serviced
		Cap, crankshaft main bearing—Middle		
		Cap, crankshaft main bearing—Rear		
2	0350014	Dowel, crankshaft main bearing cap to cylinder block ...	6	
3	0745163	Setscrew, crankshaft main bearing cap to cylinder block ...	6	
4	0921127	Tab-washer, crankshaft main bearing cap to cylinder block setscrew	6	
5	0530021	Liner, cylinder block	4	
6	0730118	Seal, cylinder block liner	4	
7	0650714	Plug, cylinder block water jacket	1	3 fitted prior to Eng. No. 7004060
8	0650715	Plug, cylinder block camshaft chamber—Rear	1	Used only with 55280
	0650777	Plug, cylinder block camshaft chamber—Rear	1	Used only with 56191/57238
9	0650717	Plug, cylinder block lub. oil pressure rail	2	
10	0650594	Plug, cylinder block lub. oil pressure switch bosses	2	
11	0650593	Plug, cylinder block alternative draincock position	1	
12	0650664	Plug, cylinder block tachometer drive facing	1	
13	0746616	Plug, cylinder block L.H. side bearer facings	2	1 in Front face lower hole and 1 in Centre face lower front hole
14	0920150	Washer, cylinder block L.H. side bearer facing plug ...	2	
15	0826468	Stud, cylinder block to cylinder head	18	
16	0826220	Stud, cylinder block to tappet inspection cover	10	
17	0826220	Stud, cylinder block to windscreen wiper drive face blanking plate	2	Used only with 55280
18	0826201	Stud, cylinder block to engine front mounting plate and timing gear housing	1	Also detailed on Section "F"
19	0826608	Stud, cylinder block to lub. oil filter	2	Also detailed on Section "G"
	0826218	Stud, cylinder block to fuel oil injection pump	2	Also detailed on Section "I"
20	31419	Cock, cylinder block water drain	1	
21	0201297	Connection, cylinder block water inlet	1	
22	0490655	Gasket, cylinder head	1	
23	**55281**	COVER, CRANKSHAFT REAR END OIL SEAL (ASSEMBLY)	1	
		Including :—		
24	0096238	Setscrew, crankshaft rear end oil seal cover clamping ...	2	
25	0920053	Washer, crankshaft rear end oil seal cover clamping setscrew ...	2	
26	0730127	Seal, crankshaft rear end oil	2	
27	0490658	Joint, crankshaft rear end oil seal cover to cylinder block ...	1	
28	0490659	Joint, crankshaft rear end oil seal cover to rear main bearing cap	1	
29	0746259	Setscrew, crankshaft rear end oil seal cover to cylinder block and rear main bearing cap	6	
30	0920053	Washer, crankshaft rear end oil seal cover to cylinder block and rear main bearing cap setscrew	6	

SECTION "A" Contd.

Cylinder Block

Ref. No.	Part No.	Description	Qty. Per Engine	Remarks
31	**0994443**	COVER, TAPPET INSPECTION	1	Obsolete—Use 37554521
	37554521	COVER, TAPPET INSPECTION	1	
32	0490653	Joint, tappet inspection cover to cylinder block	1	
		Stud, tappet inspection cover to cylinder block		See Cyl. Block (Assembly)
33	0576002	Nut, tappet inspection cover retaining	10	
34	0920053	Washer, tappet inspection cover retaining nut	10	
35	**0941052**	PLATE, WINDSCREEN WIPER DRIVE FACE BLANKING ...	1	Used only with 55280
36	0490649	Joint, windscreen wiper drive face blanking plate to cylinder block	1	Used only with 55280
		Stud, windscreen wiper drive face blanking plate to cylinder block		Used only with 55280
37	0576002	Nut, windscreen wiper drive face blanking plate retaining ...	2	Used only with 55280
38	0920053	Washer, windscreen wiper drive face blanking plate retaining nut ...	2	Used only with 55280
39	**0994446**	DIPSTICK, LUB. OIL	1	
40	0994447	Tube, lub. oil dipstick c/w seal	1	
41	0730135	Seal, lub. oil dipstick tube	1	Included in 0994447
42	0566005	Nipple, lub. oil dipstick tube to cylinder block	1	
43	0571263	Nut, lub. oil dipstick tube to cylinder block	1	
44	**0941159**	PLATE, ENGINE MOUNTING—FRONT	1	
45	0490740	Joint, engine front mounting plate to cylinder block	1	
46	0746254	Setscrew, engine front mounting plate to cylinder block	4	
47	0920053	Washer, engine front mounting plate to cylinder block setscrew ...	4	

NOTE :—

***Service Replacement Cylinder Block 57238 comprises Cylinder Block 51691, Camshaft 0140037, Thrust Plate 0941005, Plug 0650777 and Gear 31171414, all of which are required to effect complete interchangeability with Cylinder Block 55280.**

Notes

Plate "B"

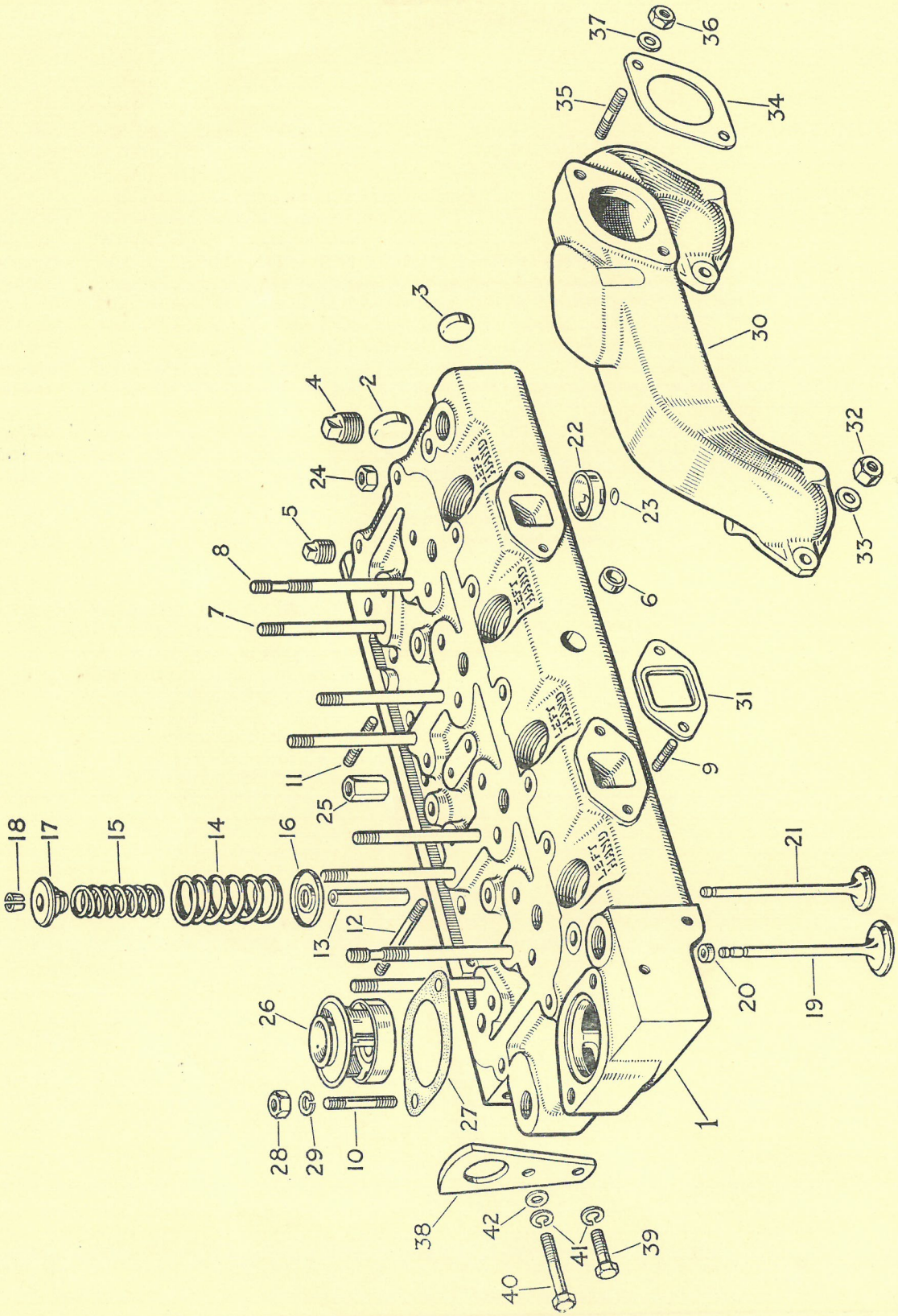
1
2
3
4
5
6
7
8
9
10
11
12
13
14
15
16
17
18
19
20
21
22
23
24
25
26
27
28
29
30
31
32
33
34
35
36
37
38
39
40
41
42

SECTION "B"

Cylinder Head

Ref. No.	Part No.	Description	Qty. Per Engine	Remarks
	56865	CYLINDER HEAD (ASSEMBLY)—MAJOR	1	Replaces 55398/56713
		Comprising :—		
1	**56866**	CYLINDER HEAD (ASSEMBLY)—MINOR	1	Replaces 55399/56714
2	0650710	Plug, cylinder head—Rear face	1	
3	0650713	Plug, cylinder head—Rear face	1	
4	0650540	Plug, cylinder head—Top face	3	
5	0650586	Plug, cylinder head—Top face Included in	4	
6	0650714	Plug, cylinder head—L.H. face 56866 ...	1	
7	0826250	Stud, cylinder head to rocker shaft bracket—Short	6	
8	0825219	Stud, cylinder head to rocker shaft bracket—Long	2	Also secure Cyl. Head cover
9	0826260	Stud, cylinder head to exhaust manifold	4	Replace 0826266/0826232
10	0826419	Stud, cylinder head to water outlet connection	2	
11	0826227	Stud, cylinder head to induction manifold	4	Prior to Eng. No. 7002131. Obsolete—See Section 'E'
12	0826231	Stud, cylinder head to induction manifold— Bottom centre hole	1	
13	0420030	Guide, inlet and exhaust valve	8	
14	0780144	Spring, inlet and exhaust valve—Outer	8	
15	0780143	Spring, inlet and exhaust valve—Inner	8	
16	0921117	Seat, inlet and exhaust valve spring	8	
17	0150143	Cap, inlet and exhaust valve spring retaining	8	
18	0230001	Cotters, inlet and exhaust valve spring retaining cap ...	8	prs.
19	0910064	Valve, inlet	4	
20	0640116	Seal, inlet valve	4	
21	0910061	Valve, exhaust	4	
22	0470652	Insert, combustion chamber	4	
23	0921249	Washer, combustion chamber insert locking	4	
		Gasket, cylinder head		See Section "A"
		Stud, cylinder head to cylinder block		
24	0571417	Nut, cylinder head retaining	13	Replace 0576051
25	0571416	Nut, cylinder head retaining—Special	5	Replace 0571347
26	**32550**	THERMOSTAT	1	Alternative 33841
27	0490184	Joint, cylinder head to water outlet connection	1	
		Stud, cylinder head to water outlet connection		See Cyl. Head (Assembly) —Minor
28	0576051	Nut, cylinder head water outlet connection stud	2	
29	0920054	Washer, cylinder head water outlet connection stud	2	
30	**0540155**	MANIFOLD, EXHAUST	1	Obsolete—Use 0540179/ 0826260
	0540179	MANIFOLD, EXHAUST	1	
31	0490656	Joint, exhaust manifold to cylinder head	2	
		Stud, exhaust manifold to cylinder head		See Cyl. Head (Assembly) —Minor
32	0576031	Nut, exhaust manifold retaining	4	
33	0920003	Washer, exhaust manifold retaining nut	4	
34	0490228	Joint, exhaust manifold outlet flange	1	
35	0826242	Stud, exhaust manifold outlet flange	2	
36	0576031	Nut, exhaust manifold outlet flange	2	
37	0920003	Washer, exhaust manifold outlet flange	2	
38	**0940990**	PLATE, ENGINE LIFTING—FRONT AND REAR	2	
39	0746452	Setscrew, engine lifting plate to cylinder head	3	
40	0096436	Setscrew, engine lifting plate to cylinder head (Also secures Dynamo adjusting lever)—(Replaces 0096437)	1	Also detailed on Section "J"
41	0920054	Washer, engine lifting plate to cylinder head setscrew—Spring (4 required when 0096437 used)	3	
42	0920004	Washer, engine lifting plate to cylinder head setscrew—Plain (used only with 0096437)	1	

IMPORTANT

For Specification of Screw Threads—See Introduction
Always quote Engine Number when ordering Parts

FIT ONLY GENUINE PERKINS PARTS

Plate "C"

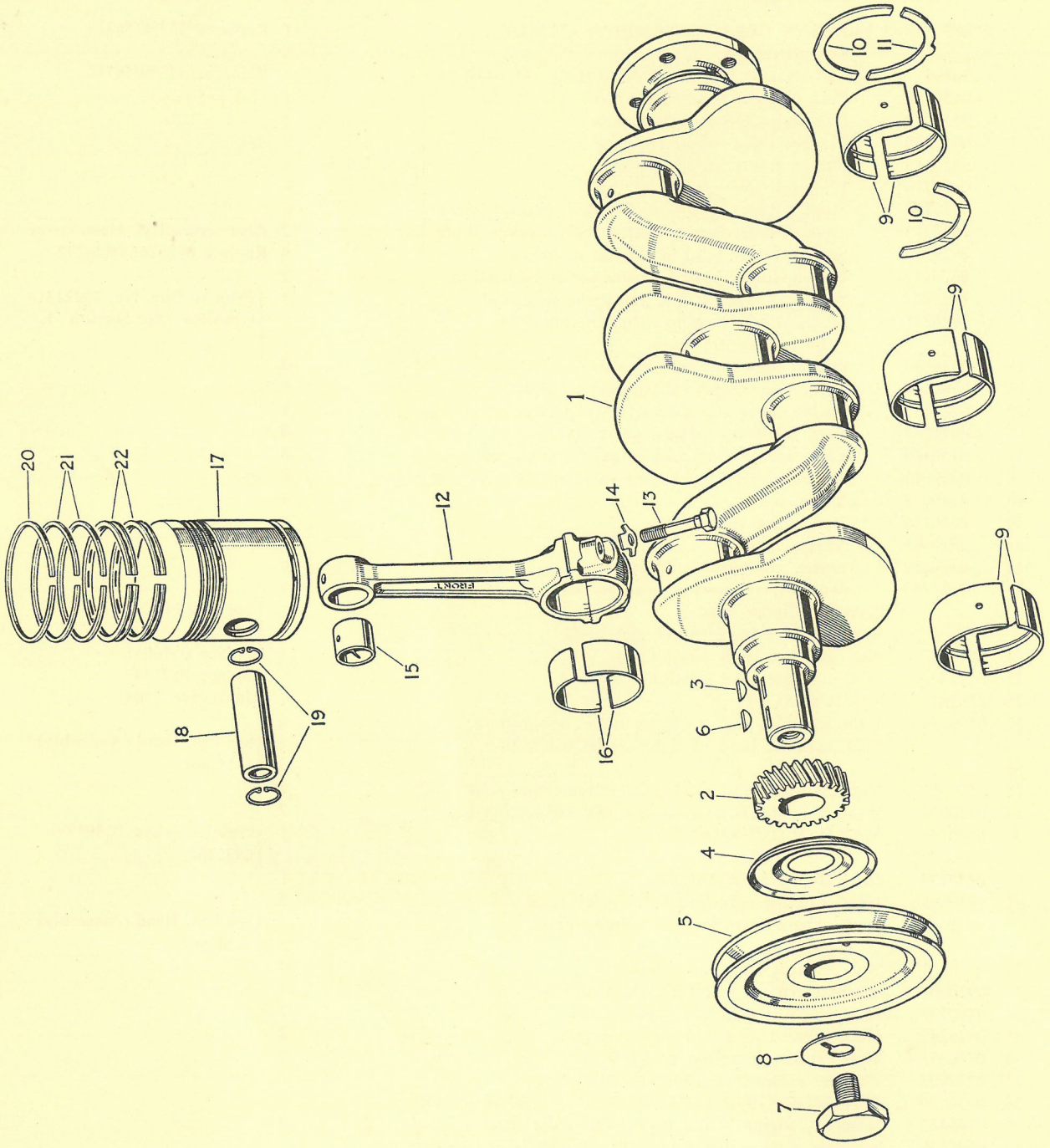

SECTION "C"

Crankshaft

Ref. No.	Part No.	Description	Qty. Per Engine	Remarks
1	**0260086**	CRANKSHAFT	1	
2	0410210	Gear, crankshaft	1	
3	0500006	Key, crankshaft gear	1	
4	0380176	Flange, crankshaft oil thrower	1	
5	0670309	Pulley, crankshaft	1	
6	0500006	Key, crankshaft pulley	1	
7	0720754	Screw, crankshaft pulley retaining	1	
8	0921119	Tab-washer, crankshaft pulley retaining screw	1	
9	***0050294**	BEARINGS, CRANKSHAFT MAIN TOP AND BOTTOM STD. SIZE	6	
		For Crankshaft main bearings ·010″ u/s, ·020″ u/s or ·030″ u/s add suffix A, B or C to Part Number.		
10	0921120	Washer, crankshaft main bearing thrust	2	In Cyl. Block and front face of Rear bearing cap
11	0921118	Washer, crankshaft main bearing thrust	1	In Rear face of Rear bearing cap
		For Thrust washers ·007″ o/s approx, add suffix A to Part Number.		
	55285	CONNECTING ROD (ASSEMBLY) C/W STD. BEARING ...	4	
12	**55284**	CONNECTING ROD (ASSEMBLY) LESS BEARING	4	
		Including :—		
13	0095314	Setscrew, connecting rod cap to rod	8	
14	0921121	Tab-washer, connecting rod cap to rod setscrew	8	
15	0050290	Bush, connecting rod small end	4	
16	***0050291**	BEARINGS, CONNECTING ROD BIG END TOP & BOTTOM STD. SIZE	8	
		For Big end bearings ·010″ u/s, ·020″ u/s or ·030″ u/s, add suffix A, B or C to Part Number.		
	†55283	PISTON (ASSEMBLY)—MAJOR	4	
		Comprising :—		
17	**55307**	PISTON (ASSEMBLY)—MINOR	4	
18	0610846	Pin, gudgeon } Included in	4	
19	0170038	Circlip, gudgeon pin retaining } 55307	8	
20	0640110	Ring, piston compression (Chrome plated)	4	Top groove
21	0640108	Ring, piston compression (Taper faced)	8	2nd and 3rd Grooves
22	0640109	Ring, piston scraper (Slotted)	8	4th and Bottom Grooves

NOTES :—

***Bearings are pre-finished to size stated and require no final fitting by hand.**

†Pistons require topping before final assembly. Refer to service literature.

Plate "D"

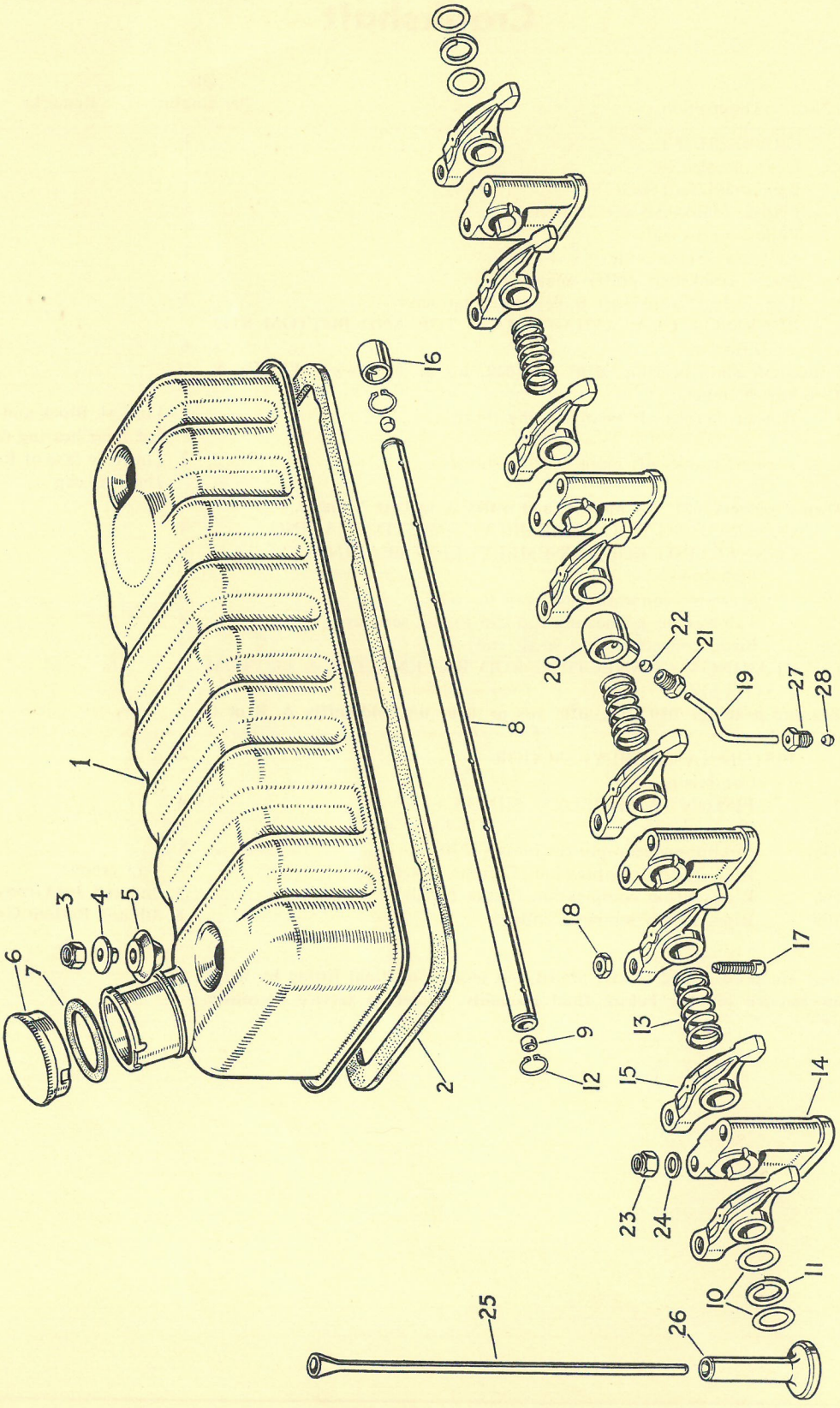

SECTION "D"

Cylinder Head Cover

Ref. No.	Part No.	Description	Qty. Per Engine	Remarks
1	**0994509**	COVER, CYLINDER HEAD	1	
2	0490724	Joint, cylinder head cover to cylinder head	1	
		Stud, cylinder head cover to cylinder head		See Section "B"
3	0576091	Nut, cylinder head cover retaining	2	
4	0921116	Washer, cylinder head cover retaining nut	2	
5	0730116	Seal, cylinder head cover retaining nut	2	
6	0150147	Cap, cylinder head cover lub. oil filler	1	
7	0490753	Joint, cylinder head cover lub. oil filler cap	1	
	54925	SHAFT, ROCKER (ASSEMBLY)	1	
		Comprising :—		
	55286	Shaft, rocker c/w plugs	1	
8	0750348	Shaft, rocker (Bare)	1	
9	0650507	Plug, rocker shaft end	2	
10	0920485	Washer, rocker shaft end—Plain	4	
11	0921122	Washer, rocker shaft end—Spring	2	
12	0170033	Circlip, rocker shaft locating	2	
13	0780261	Spring, rocker shaft	3	
14	0101776	Bracket, rocker shaft	4	
15	54926	Lever, rocker c/w bush	8	
16	0050016	Bush, rocker lever	8	
17	0720790	Screw, tappet adjusting	8	
18	0576151	Locknut, tappet adjusting screw	8	Replace 0576058
19	0623143	Pipe, rocker shaft oil feed	1	
20	0201318	Connection, rocker shaft oil feed pipe	1	
21	0571351	Nut, rocker shaft oil feed pipe to connection	1	Prior to Eng. No. 7003280
22	0566002	Nipple, rocker shaft oil feed pipe to connection nut ...	1	
		Stud, rocker shaft bracket to cylinder head		See Section "B"
23	0576091	Nut, rocker shaft bracket retaining	8	
24	0920003	Washer, rocker shaft bracket retaining nut	8	
25	0700280	Push rod	8	
26	0860015	Tappet	8	
27	0571351	Nut, rocker shaft oil feed pipe to cylinder head	1	
28	0566002	Nipple, rocker shaft oil feed pipe to cylinder head nut	1	

Plate "E"

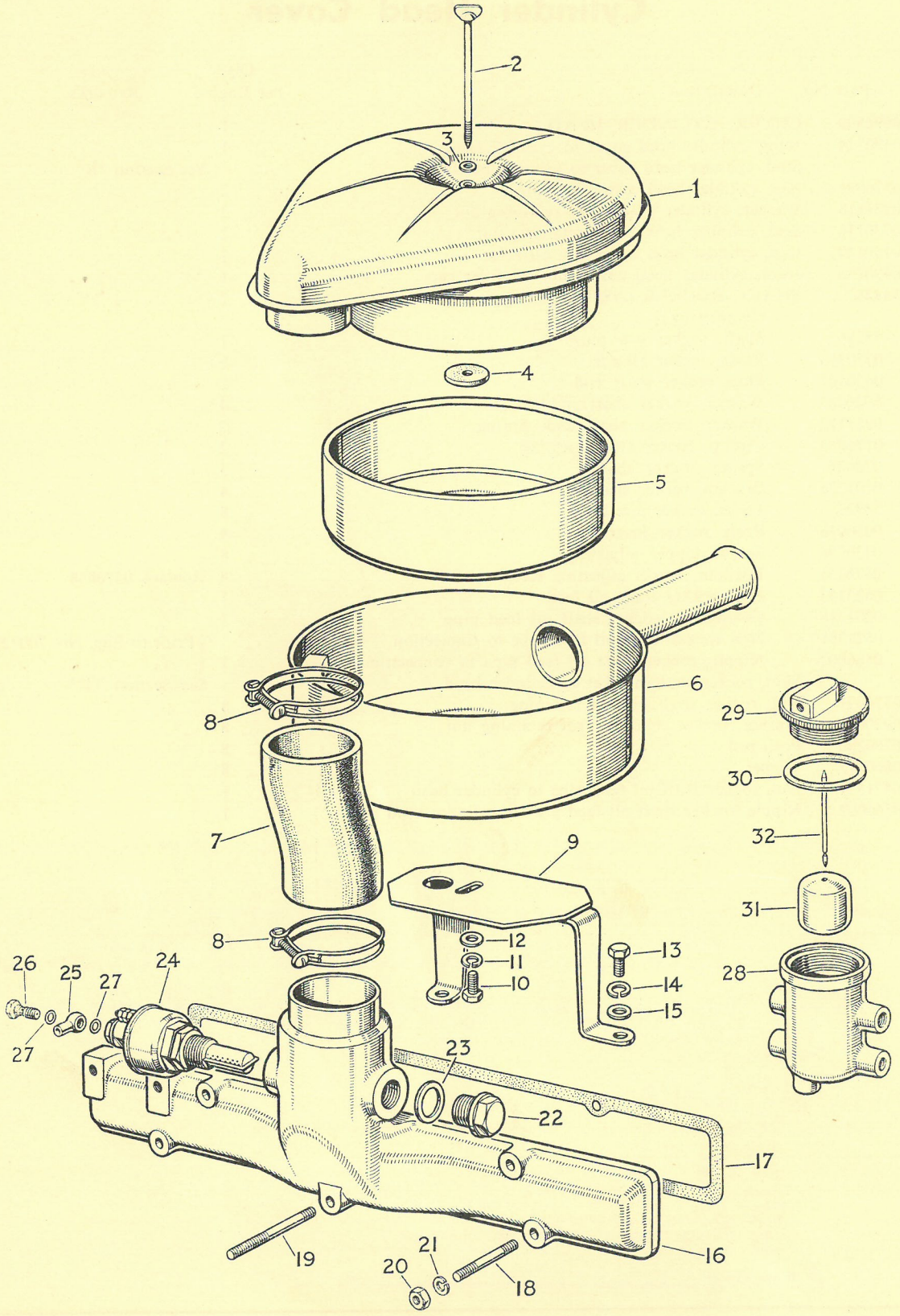
2
3
1
4
5
6
8
29
30
32
7
9
31
8
12
11
10
13
14
15
28
26
25
27
24
27
23
22
17
19
21
20
18
16

SECTION "E"

Air Induction System

Ref. No.	Part No.	Description	Qty. Per Engine	Remarks
	32581	AIR FILTER (ASSEMBLY)	1	
		Comprising :—		
1	32586	Cover, air filter c/w element	1	
2	0095339	Bolt, air filter clamping	1	
3	0921236	Washer, air filter clamping bolt	1	
4	0490696	Joint, air filter element to container	1	
5	32588	Container, air filter oil	1	
6	32587	Silencer, air filter	1	
7	**0470688**	ADAPTOR, AIR FILTER TO INDUCTION MANIFOLD ...	1	
8	0180118	Clip, air filter adaptor clamping	2	Replace 0180117
9	**0102014**	BRACKET, AIR FILTER SUPPORT	1	
10	0746253	Setscrew, air filter support bracket to air filter	1	
11	0920053	Washer, air filter support bracket to air filter setscrew—Spring ...	1	
12	0920003	Washer, air filter support bracket to air filter setscrew—Plain ...	1	
13	0746451	Setscrew, air filter support bracket to cylinder head special retaining nut	2	
14	0920054	Washer, air filter support bracket setscrew—Spring	2	
15	0920004	Washer, air filter support bracket setscrew—Plain	2	
16	**0540150**	MANIFOLD, INDUCTION	1	
17	0490652	Joint, induction manifold to cylinder head	1	
18	0826227	Stud, induction manifold to cylinder head—Short	4	Prior to Eng. No. 7002131. Obsolete—Use 0096233/0096237
19	0826231	Stud, induction manifold to cylinder head—Long	1	
20	0576002	Nut, induction manifold to cylinder head retaining	5	Used only with 0826227/0826231
	0096233	Setscrew, induction manifold to cylinder head	4	Eng. No. 7002131 onwards
	0096237	Setscrew, induction manifold to cylinder head—Long	1	
21	0920053	Washer, induction manifold to cylinder head retaining nut ...	5	
22	0650005	Plug, induction manifold—Alternative heater position	1	
23	0920153	Washer, induction manifold plug	1	
24	**33385**	HEATER, COLD STARTING FUEL OIL	1	
25	0200642	Banjo connection, cold starting fuel oil heater	1	Obsolete—Use 31441/0920148/0576111/0566002
26	0095313	Bolt, cold starting fuel oil heater banjo connection	1	
27	0920107	Washer, cold starting fuel oil heater banjo connection bolt ...	2	
	31441	Cock, cold starting fuel oil heater	1	
	0920148	Washer, cold starting fuel oil heater cock	1	
	0576111	Nut, cold starting fuel oil heater cock	1	
	0566002	Olive, cold starting fuel oil heater cock	1	
	0994528	CONTAINER, COLD STARTING FUEL OIL (ASSEMBLY) ...	1	Replaces 70395
		Comprising :—		
28	0840057	Container, cold starting fuel oil—Bare	1	
29	0150148	Cap, cold starting fuel oil container	1	
30	0490687	Joint, cold starting fuel oil container cap	1	
31	0997193	Float, cold starting fuel oil container	1	
32	0910066	Needle valve, cold starting fuel oil container float	1	
	0102214	BRACKET, THROTTLE AND STOP CONTROL RETURN SPRING ANCHOR (To Timing Gear Housing—also detailed on Section "I")	1	Eng. No. 7002989 onwards
	0780253	Spring, throttle control return	1	
	0996522	Fork-end, throttle control lever	1	
	0610877	Clevis Pin, throttle control lever fork end	1	
	0920002	Washer, throttle control lever fork end clevis pin	1	
	0610002	Split-pin, clevis pin retaining	1	

Plate "F"

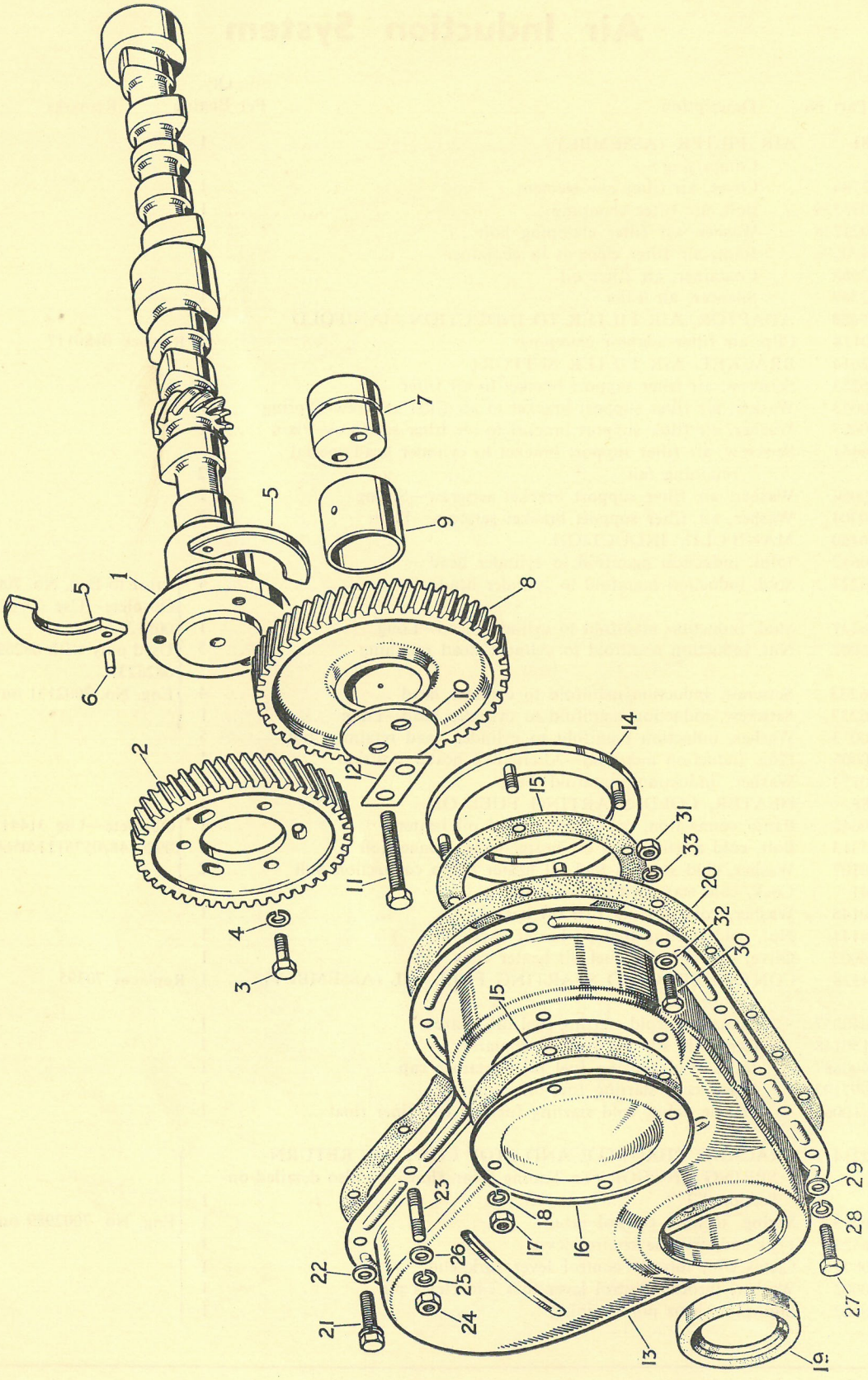
1
2
3
4
5
5
6
7
8
9
10
11
12
13
14
15
15
16
17
18
19
20
21
22
23
24
25
26
27
28
29
30
31
32
33

SECTION "F"

Timing Gear

Ref. No.	Part No.	Description	Qty. Per Engine	Remarks
1	**0140030**	CAMSHAFT	1	Prior to Eng. No. 7001001
	***0140038**	CAMSHAFT	1	Eng. No. 7001001 to 7003112
	0140037	CAMSHAFT	1	Eng. No. 7003113 onwards
2	0410212	Gear, camshaft	1	
3	0746254	Setscrew, camshaft gear to camshaft	3	
4	0920053	Washer, camshaft gear to camshaft setscrew	3	
5	0941005	Plate, camshaft thrust	2	Used only with 0140030/0140037
	0941226	Plate, camshaft thrust	2	Used only with 0140038
6	0610844	Dowel, camshaft thrust plate to cylinder block	1	
7	0450038	Hub, idler gear	1	
8	55855	Gear, idler c/w bush	1	Replaces 0999011
9	0050349	Bush, idler gear	1	
10	0941044	Plate, idler gear retaining	1	
11	0746461	Setscrew, idler gear retaining plate and hub to cylinder block ...	2	
12	0921159	Tab-washer, idler gear retaining plate and hub setscrew	1	
		Gear, fuel injection pump drive		See Section "I"
	54939	HOUSING, TIMING GEAR (ASSEMBLY)	1	
		Comprising :—		
13	0440547	Housing, timing gear	1	
14	0994474	Ring, timing gear housing fuel pump gear inspection hole c/w studs	1	
15	0490643	Joint, timing gear housing fuel pump gear inspection hole ring and cover	2	
16	0940988	Cover, timing gear housing fuel pump gear inspection hole ...	1	
17	0576001	Nut, cover retaining	4	
18	0920052	Washer, cover retaining nut	4	
19	0730098	Seal, timing gear housing oil	1	
20	0490650	Joint, timing gear housing to engine front mounting plate ...	1	
		Plate, engine front mounting		See Section "A"
21	0749054	Setscrew, timing gear housing and engine front mounting plate to cylinder block	5	Replace 0749055
22	0920003	Washer, housing and plate setscrew	4	
23	0826201	Stud, timing gear housing and engine front mounting plate to cylinder block	1	Also detailed on Section "A"
24	0576002	Nut, housing and plate retaining	1	
25	0920053	Washer, housing and plate retaining nut—Spring	1	
26	0920003	Washer, housing and plate retaining nut—Plain	1	
27	0749054	Setscrew, timing gear housing and engine front mounting plate to main bearing cap	4	Replace 0746255
28	0920053	Washer, housing and plate setscrew—Spring	4	Used only with 0746255
29	0920003	Washer, housing and plate setscrew—Plain	4	
30	0746052	Bolt, timing gear housing to engine front mounting plate ...	4	
31	0576001	Nut, housing retaining	4	
32	0920002	Washer, housing retaining bolt—Plain	3	
33	0920052	Washer, housing retaining nut—Spring	4	

NOTE :—

***When Camshaft 0140038 is not available Camshaft 0140037 plus Thrust Plates 0941005 and Plug 0650777 may be used.**

Plate "G.1"

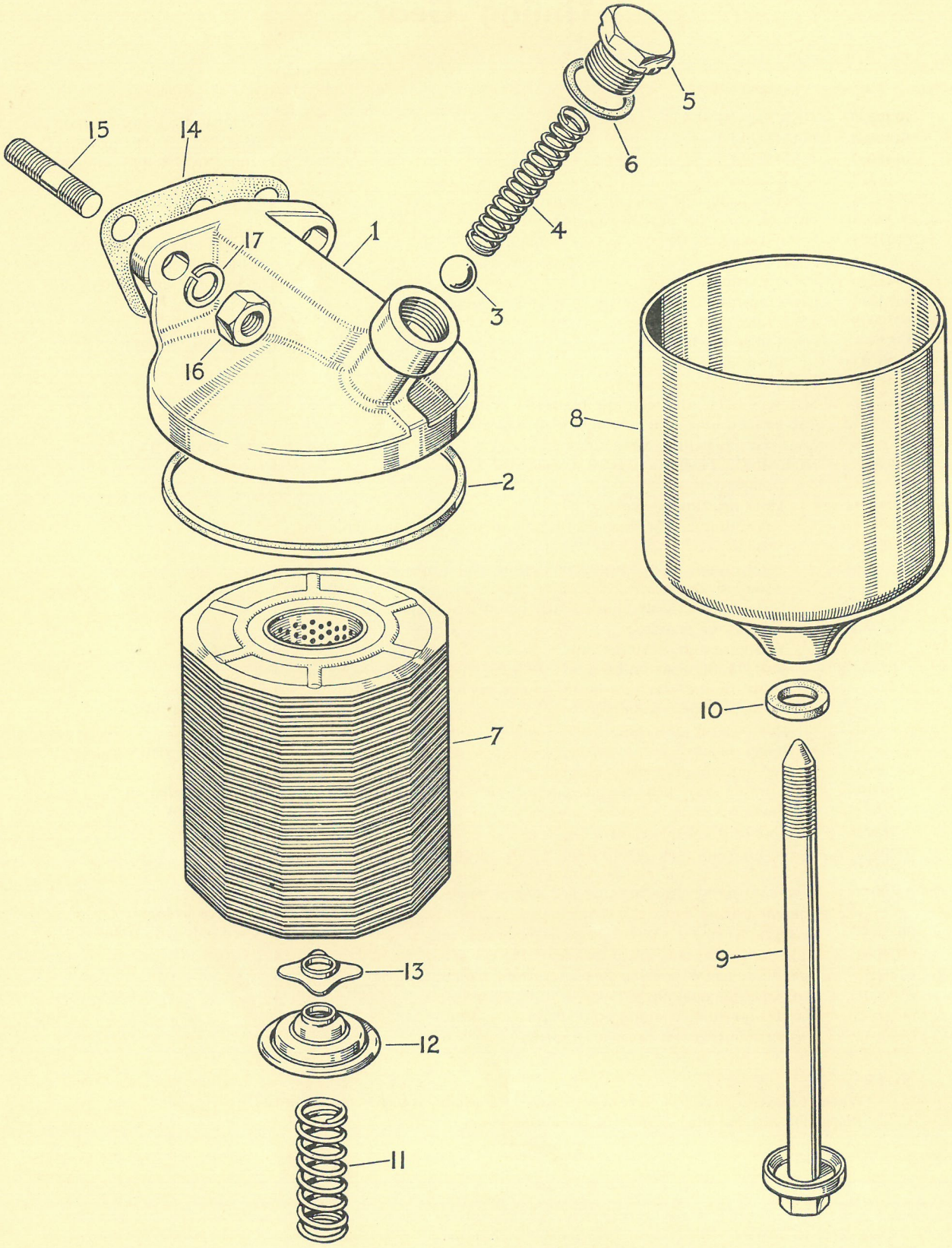

SECTION "G"

Lubricating Oil System

Ref. No.	Part No.	Description	Qty. Per Engine	Remarks
	32578	FILTER, LUB. OIL (ASSEMBLY)	1	
		Comprising :—		
	35209	HEADCASTING, LUB. OIL FILTER (ASSEMBLY) ...	1	
1	0240750	Headcasting, lub. oil filter (Bare)	1	
2	0490725	Joint, lub. oil filter headcasting to container	1	Also included in 35212
3	0020011	Ball, lub. oil filter by-pass valve Comprise ...	1	
4	0780243	Spring, lub. oil filter by-pass valve ball 35209 ...	1	
5	0650690	Plug, lub. oil filter by-pass valve	1	
6	0490595	Joint washer, lub. oil filter by-pass valve plug	1	
7	35212	Element, lub. oil filter	1	
	35210	CONTAINER, LUB. OIL FILTER (ASSEMBLY)	1	
8	0840062	Container, lub. oil filter (Bare)	1	
9	32529	Bolt, lub. oil filter container to headcasting	1	
10	0921061	Washer, container to headcasting bolt sealing Comprise ...	1	
11	0780290	Spring, lub. oil filter element pressure plate 35210 ...	1	
12	0941138	Plate, lub. oil filter element pressure	1	
13	0941148	Spider plate, lub. oil filter element centralising	1	
14	0490672	Joint, lub. oil filter to cylinder block	1	
15	0826608	Stud, lub. oil filter to cylinder block	2	Also detailed on Section "A"
16	0576004	Nut, lub. oil filter retaining	2	
17	0920055	Washer, lub. oil filter retaining nut	2	
	34085	PUMP, LUB. OIL (ASSEMBLY)	1	Prior to Eng. No. 7002300. Obsolete—Use 34194
	34194	PUMP, LUB. OIL (ASSEMBLY)	1	Eng. No. 7002300 to 7004752
	41314109	PUMP, LUB. OIL (ASSEMBLY)	1	Eng. No. 7004753 onwards
		Comprising :—		
18	0080333	Body, lub. oil pump		
19	0994657	Shaft, lub. oil pump driving c/w inner rotor and pin, and outer rotor	1	
20	31171414	Gear, lub. oil pump driving	1	Replaces 0410209
21	0630067	Plunger, lub. oil pump relief valve	1	Prior to Eng. No. 7002300. Obsolete—Use 0630082/ 0780312 in pairs
22	0780282	Spring, lub. oil pump relief valve	1	
	0630082	Plunger, lub. oil pump relief valve	1	Eng. No. 7002300 onwards
	0780312	Spring, lub. oil pump relief valve	1	
23	0150144	Cap, lub. oil pump relief valve spring retaining	1	
24	0610011	Split-pin, lub. oil pump relief valve spring retaining cap ...	1	
25	0240827	Cover, lub. oil pump (Replaces 0240725)	1	Used only with 34085/34194
	0240823	Cover, lub. oil pump	1	Used only with 41314109
26	0746159	Setscrew. lub. oil pump cover to body	4	Replace 0746158
27	0920052	Washer, lub. oil pump cover to body setscrew	4	
	0999196	PIPE, LUB. OIL FEED TO PUMP DRIVING GEARS ...	1	
	0726504	Bolt, lub. oil feed pipe support clip clamping	1	
	0576106	Nut, lub. oil feed pipe support clip clamping bolt	1	
28	0745157	Setscrew, cylinder block to lub. oil pump body	1	
29	0920833	Tab-washer, cylinder block to lub. oil pump body setscrew ...	1	
30	**0994499**	PIPE, LUB. OIL SUCTION	1	Prior to Eng. No. 7004753
31	0571352	Nut, lub. oil suction pipe to lub. oil pump	1	
32	0566007	Nipple, lub. oil suction pipe to lub. oil pump	1	

Plate "G.2"

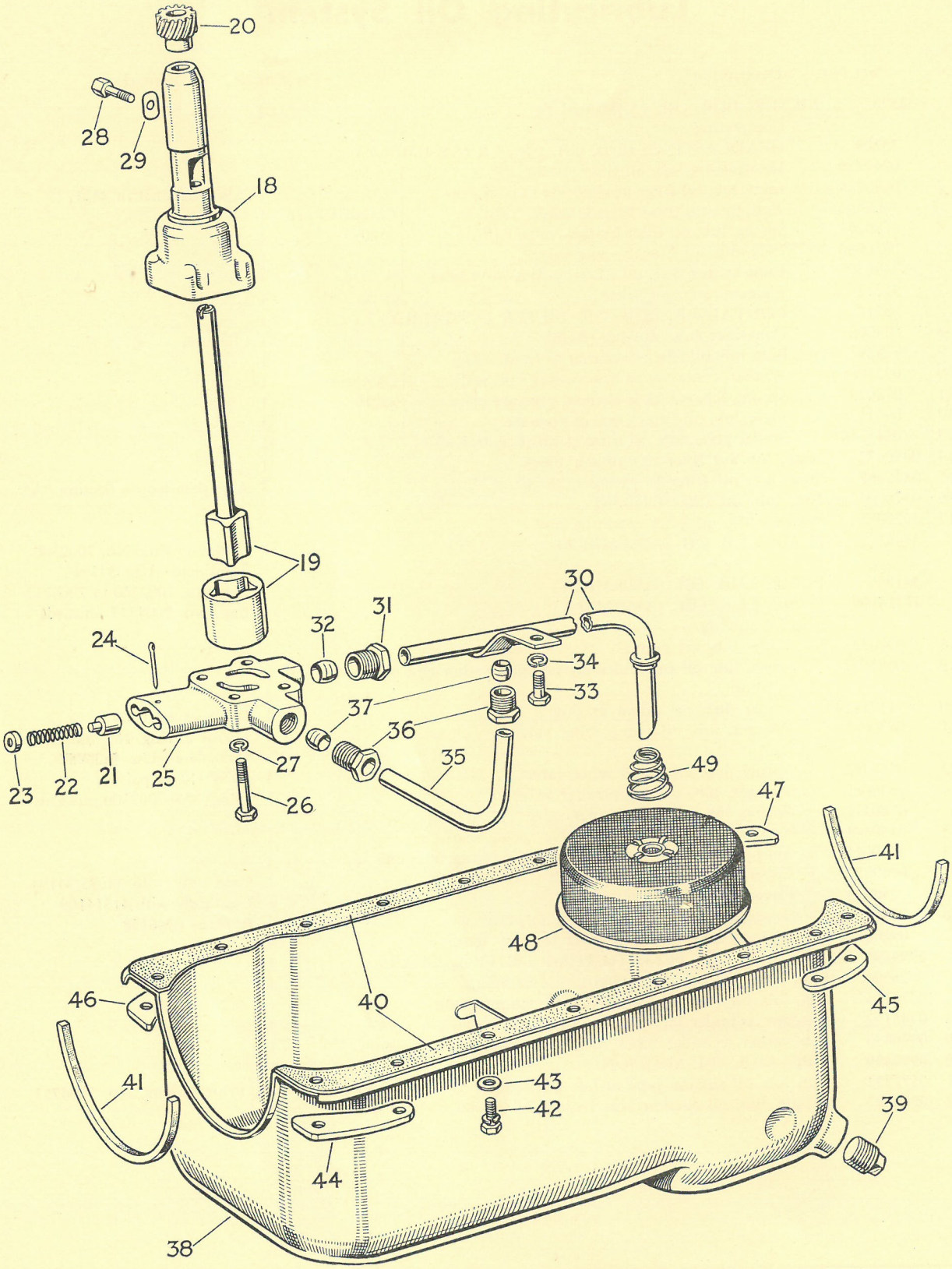
20
28
29
18
19
30
31
32
24
34
33
37
36
35
23
22
21
25
27
26
49
47
41
48
46
40
45
41
43
42
39
44
38

SECTION "G" Contd.

Lubricating Oil System

Ref. No.	Part No.	Description	Qty. Per Engine	Remarks
	0999532	PIPE, LUB. OIL SUCTION	1	Eng. No. 7004753 onwards
	0571293	Nut, lub. oil suction pipe to lub. oil pump	1	
	0560244	Nipple, lub. oil suction pipe to lub. oil pump	1	
33	0746252	Setscrew, lub. oil suction pipe support clip to main bearing cap ...	1	
34	0920053	Washer, lub. oil suction pipe support clip to main bearing cap setscrew	1	
35	**0623293**	PIPE, LUB. OIL DELIVERY	1	
36	0571352	Nut, lub. oil delivery pipe to lub. oil pump and cylinder block ...	2	
37	0566007	Nipple, lub. oil delivery pipe to lub. oil pump and cylinder block	2	
38	**0830187**	SUMP, LUB. OIL	1	
39	0650540	Plug, lub. oil sump drain	1	
40	0490654	Joint, lub. oil sump—Sides	1	pr.
41	0490775	Joint, lub. oil sump—Front and rear	2	Replace 0490657
42	0749054	Setscrew, lub. oil sump and stiffeners to cylinder block c/w washer	16	
43	0920003	Washer, lub. oil sump to cylinder block setscrew—Plain	8	Not used with Stiffeners
44	0941039	Stiffener, lub. oil sump—Front L.H. side	1	
45	0941040	Stiffener, lub. oil sump—Rear L.H. side	1	
46	0941042	Stiffener, lub. oil sump—Front R.H. side	1	
47	0941041	Stiffener, lub. oil sump—Rear R.H. side	1	
48	**0800080**	STRAINER, LUB. OIL SUMP	1	Prior to Eng. No. 7004753
49	0780094	Spring, lub. oil sump strainer positioning	1	
	0800099	STRAINER, LUB. OIL SUMP	1	Eng. No. 7004753 onwards
	0780310	Spring, lub. oil sump strainer positioning	1	

Plate "H"

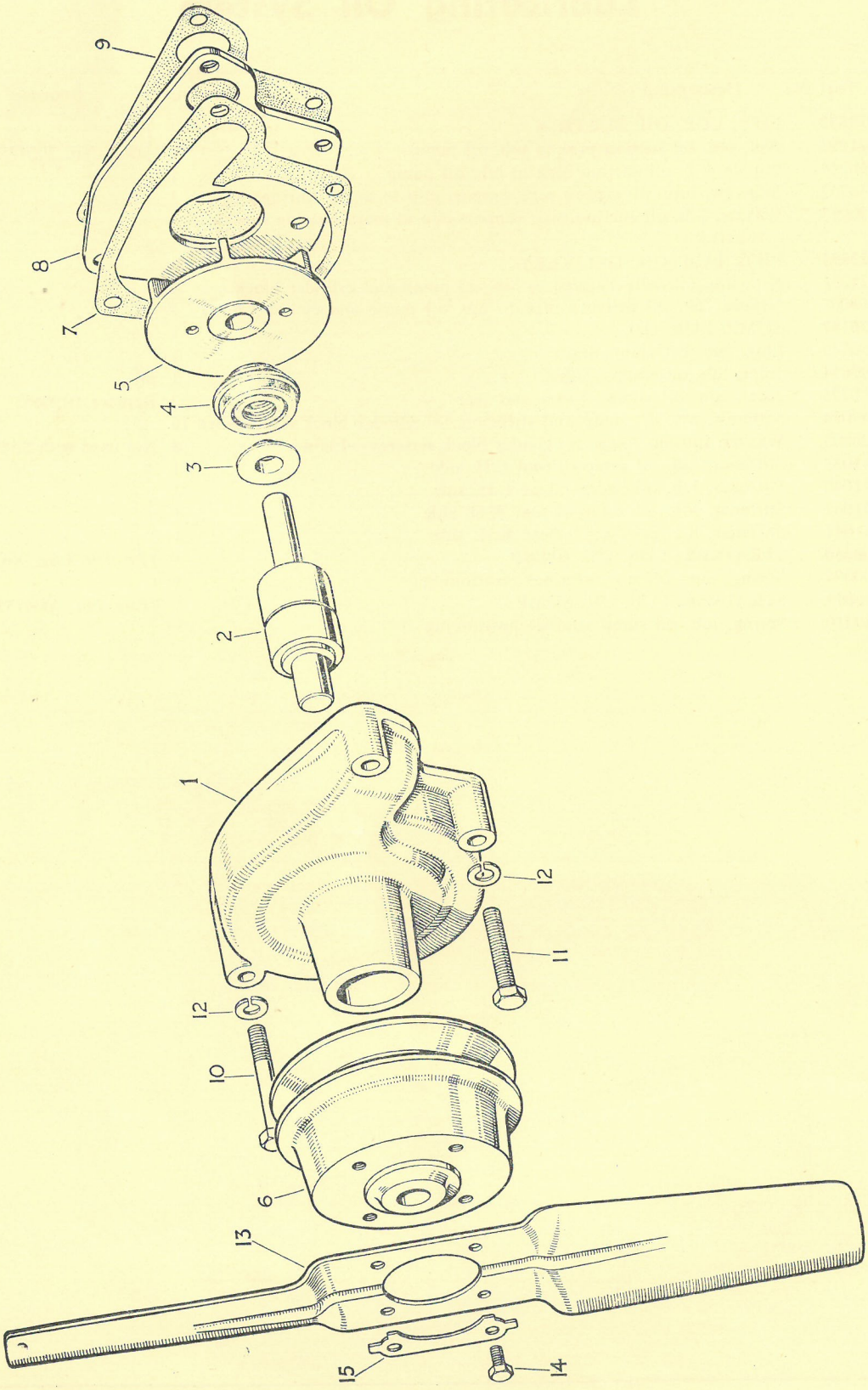

SECTION "H"

Water Pump

Ref. No.	Part No.	Description	Qty. Per Engine	Remarks
	0994270	WATER PUMP (ASSEMBLY)	1	Prior to Eng. No. 7004039. Obsolete—Use 41312034/0070077
		Comprising :—		
1	0080271	Body, water pump	1	Obsolete—Use 37711232
	37711232	Body, water pump	1	
2	0750344	Shaft, water pump drive	1	
3	0380175	Flange, water pump thrower	1	
4	34050	Seal, water pump shaft	1	
5	0460028	Impellor, water pump	1	Obsolete—Use 37447251
	37447251	Impellor, water pump	1	
6	0670303	Pulley, water pump	1	Obsolete—Use 0670388/0070077
	0670388	Pulley, water pump	1	
	41312034	WATER PUMP (ASSEMBLY)	1	Eng. No. 7004039 onwards
		Comprising :—		
	37711232	Body, water pump	1	
	0750344	Shaft, water pump drive	1	
	0180968	Clip, water pump drive shaft locating	1	
	0380175	Flange, water pump thrower	1	
	34050	Seal, water pump shaft	1	
	37447251	Impellor, water pump	1	
	0670388	Pulley, water pump	1	
	0096236	Setscrew, water pump body and backplate to cylinder block—Long	2	
	0746261	Setscrew, water pump body and backplate to cylinder block—Short	1	
	0920053	Washer, water pump body and backplate setscrew	3	
7	0490644	Joint, water pump body to backplate	1	
8	0940991	Plate, water pump body back	1	
9	0490660	Joint, water pump body backplate to cylinder block	1	
10	0096236	Setscrew, water pump body and backplate to cylinder block—Long	2	Used only with 0994270
11	0746261	Setscrew, water pump body and backplate to cylinder block—Short	2	Used only with 0994270
12	0920053	Washer, water pump body and backplate to cylinder block setscrew	4	Used only with 0994270
	0746261	Setscrew, water pump body and backplate to cylinder block—Short	1	Used only with 41312034
	0920053	Washer, water pump body and backplate setscrew	1	Used only with 41312034
13	**0360052**	FAN, 14" DIA. 2 BLADE	1	
14	0746252	Setscrew, fan to water pump pulley	4	
15	0920645	Tab-washer, fan to water pump pulley setscrew	2	
		Belt. water pump and dynamo driving		
	0070168	Belt, water pump and dynamo driving } Also detailed on ...	1	Prior to Eng. No. 7004039
	0070077	Belt, water pump and dynamo driving } Section "J"	1	Eng. No. 7004039 onwards

Plate "I.1"

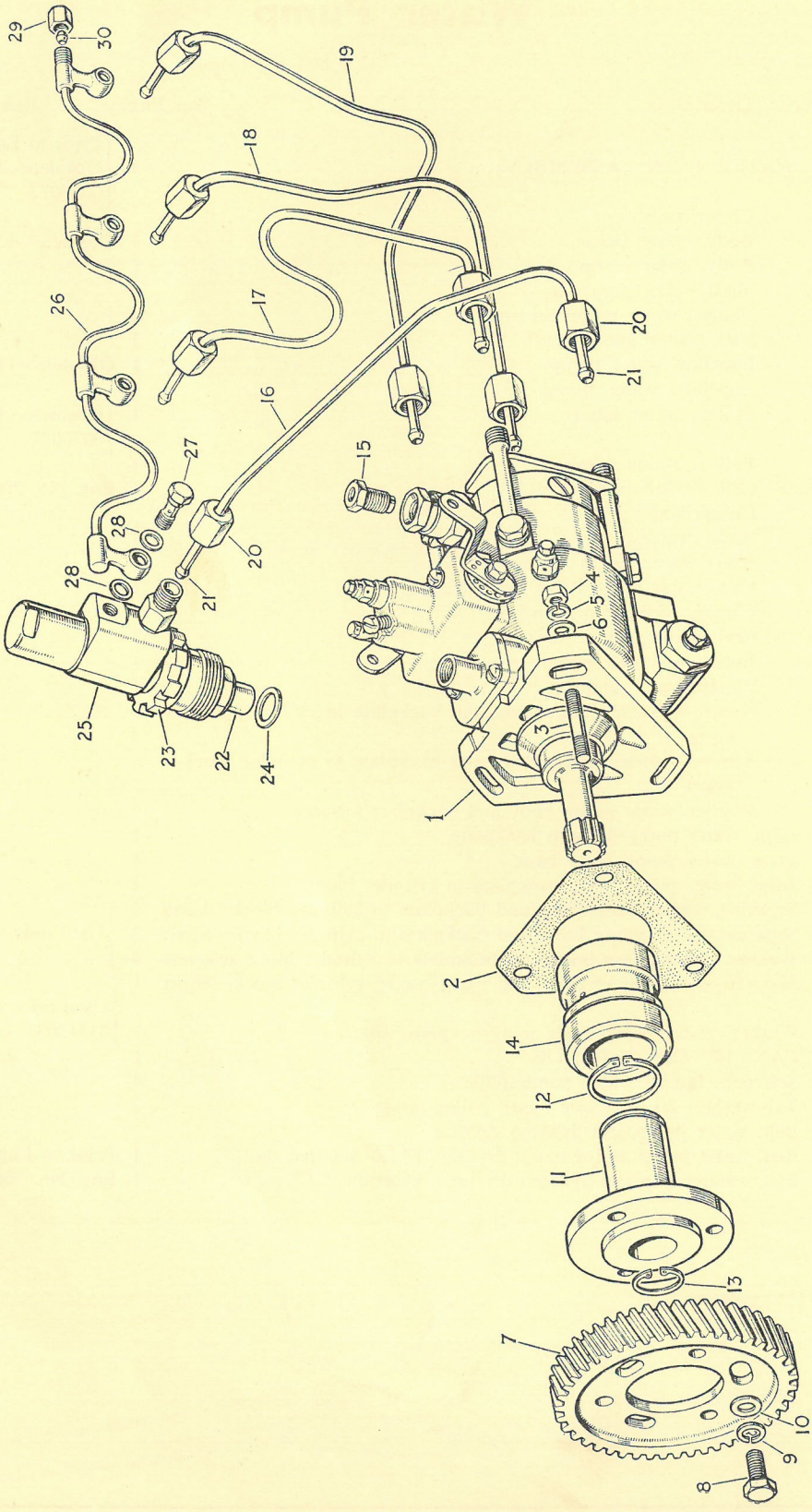
29
30
19
18
26
17
20
21
16
27
15
28
28
20
21
4
5
6
3
25
23
22
24
1
2
14
12
11
13
7
10
9
8

SECTION "I"

Fuel Oil Injection Equipment

Ref No.	Part No.	Description	Qty. Per Engine	Remarks
1	**33214**	PUMP, FUEL OIL INJECTION (ASSEMBLY)— (TYPE DPAY 3246082)	1	Prior to Eng. No. 7003671
	33234	PUMP, FUEL OIL INJECTION (ASSEMBLY) c/w Throttle and Stop control levers (Type 3246143)	1	Eng. No. 7003671 onwards
2	0490685	Joint, fuel oil injection pump to cylinder block	1	
3	0826218	Stud, fuel oil injection pump to cylinder block	2	Also detailed on Section "A"
4	0576002	Nut, fuel oil injection pump retaining	2	
5	0920053	Washer, fuel oil injection pump retaining nut—Spring	2	
6	0920003	Washer, fuel oil injection pump retaining nut—Plain	2	
	2172692	Capscrew, fuel oil injection pump to cylinder block	1	Innermost Hole
	0920053	Washer, fuel oil injection pump setscrew—Spring	1	Innermost Hole
	0920003	Washer, fuel oil injection pump setscrew—Plain	1	Innermost Hole
7	**0410212**	GEAR, FUEL OIL INJECTION PUMP DRIVE	1	Obsolete—Use 0410270
	0410270	GEAR, FUEL OIL INJECTION PUMP DRIVE	1	
8	0746254	Setscrew, fuel oil injection pump drive gear to hub	3	
9	0920053	Washer, fuel oil injection pump drive gear to hub setscrew—Spring	3	
10	0920003	Washer, fuel oil injection pump drive gear to hub setscrew—Plain	3	
11	**0450031**	HUB, FUEL OIL INJECTION PUMP DRIVE GEAR	1	
12	0170148	Circlip, fuel oil injection pump drive gear hub retaining ...	1	
13	0170048	Circlip, fuel oil injection pump quill-shaft retaining	1	
14	0050323	Bearing, fuel oil injection pump drive gear hub	1	
15	0201148	Connection, fuel oil injection pump inlet and outlet ports ...	2	Used only with 33214
	55386	PIPES, FUEL OIL INJECTION (ASSEMBLY)	1	
		Comprising :—		
16	0994525	Pipe, fuel oil injection c/w nuts and olives No. 1 cylinder ...	1	
17	35354162	Pipe, fuel oil injection c/w nuts and olives No. 2 cylinder ...	1	Replaces 0994524
18	0994520	Pipe, fuel oil injection c/w nuts and olives No. 3 cylinder ...	1	
19	0994519	Pipe, fuel oil injection c/w nuts and olives No. 4 cylinder ...	1	
20		Nut, fuel oil injection pipe		Not Serviced
21		Olive, fuel oil injection pipe		Not Serviced
	0994726	ATOMISER, FUEL OIL INJECTION (ASSEMBLY) (120 atmos. setting)	4	Prior to Eng. No. 7003879
		Comprising :—		
22	**33435**	NOZZLE, FUEL OIL INJECTION ATOMISER	4	
23	0571348	Ring-nut, fuel oil injection atomiser retaining	4	
24	0920113	Washer, fuel oil injection atomiser seating	4	
25	**33389**	HOLDER, FUEL OIL INJECTION ATOMISER (ASSEMBLY)	4	
	0080286	Body, fuel oil injection atomiser ...	4	Comprise 33389
	0750374	Spindle, fuel oil injection atomiser ...	4	Comprise 33389
	0780030	Spring, fuel oil injection atomiser ...	4	Comprise 33389
	0571378	Nut, fuel oil injection atomiser spring cap ...	4	Comprise 33389
	0921242	Washer, fuel oil injection atomiser holder cap ...	4	Comprise 33389
	0571379	Nut, fuel oil injection atomiser holder cap ...	4	Comprise 33389
	0921243	Washer, fuel oil injection atomiser holder cap nut ...	4	Comprise 33389
	0720801	Screw, fuel oil injection atomiser adjusting ...	4	Comprise 33389
	0571380	Nut, fuel oil injection atomiser adjusting screw locking	4	Comprise 33389
	0350539	Dowel, fuel oil injection atomiser holder to nozzle ...	8	Comprise 33389
	0571381	Nut, fuel oil injection atomiser nozzle retaining ...	4	Comprise 33389
	0201387	Union, fuel oil injection atomiser leak-off pipe ...	4	Comprise 33389
	0921244	Washer, fuel oil injection atomiser leak-off union ...	4	Comprise 33389
	0201388	Union, fuel oil injection atomiser inlet connection ...	4	Comprise 33389
	0921243	Washer, fuel oil injection atomiser inlet connection union	4	Comprise 33389

IMPORTANT

For Specification of Screw Threads—See Introduction

Always quote Engine Number when ordering Parts

FIT ONLY GENUINE PERKINS PARTS

Plate "I.2"

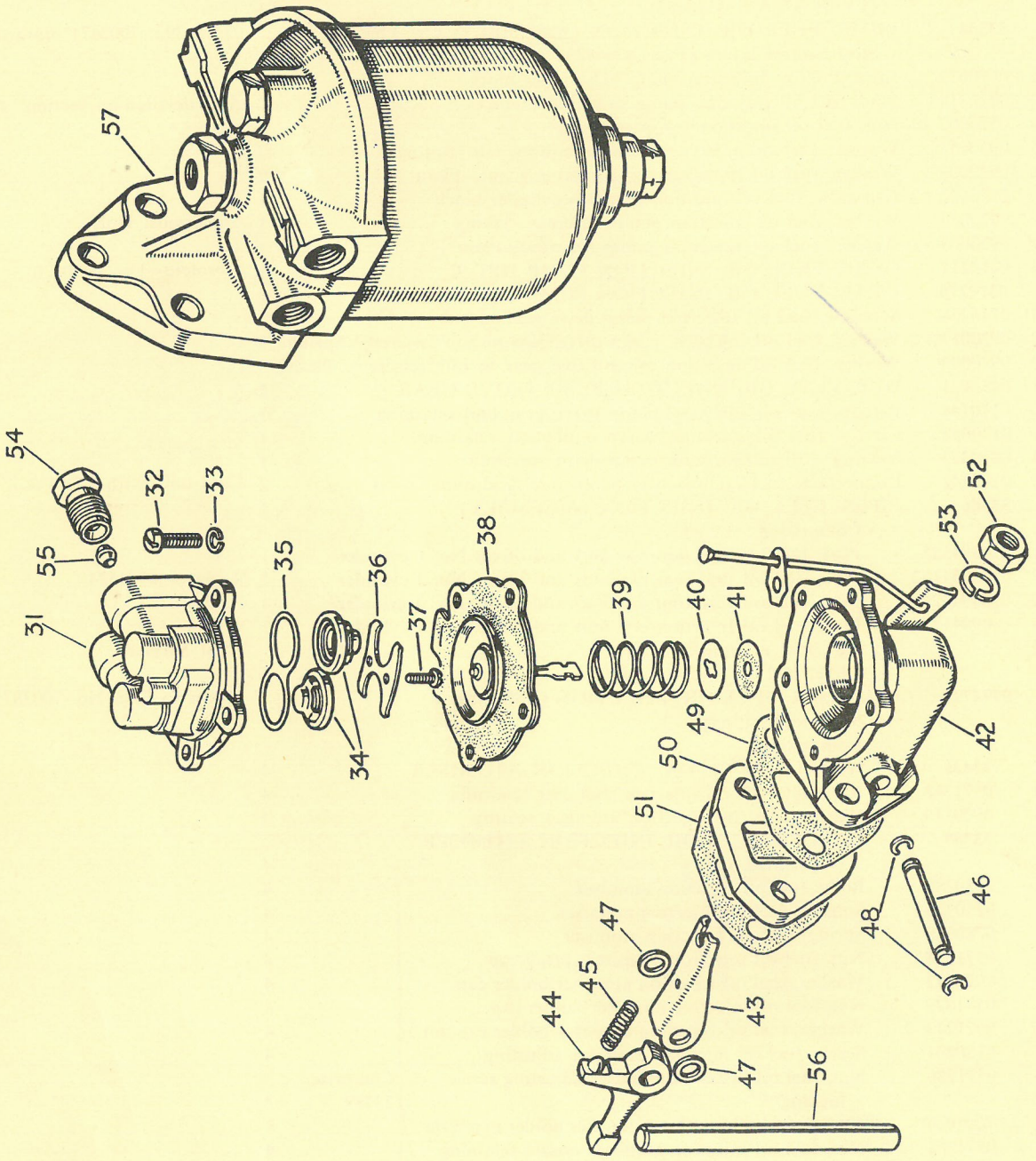
57
54
32
33
55
31
35
36
37
38
39
40
41
34
49
50
51
42
53
52
47
45
44
43
48
46
47
56

SECTION "I" Contd.

Fuel Oil Injection Equipment

Ref No.	Part No.	Description	Qty. Per Engine	Remarks
	41376001	ATOMISER, FUEL OIL INJECTION (ASSEMBLY) (120 atmos. setting)	4	Eng. No. 7003879 onwards
		Comprising :—		
	33435	NOZZLE, FUEL OIL INJECTION ATOMISER	4	
	0571348	Ring-Nut, fuel oil injection atomiser retaining	4	
	0920113	Washer, fuel oil injection atomiser seating	4	
	33481	HOLDER, FUEL OIL INJECTION ATOMISER (ASSEMBLY)	4	
	26460006	Body, fuel oil injection atomiser ...	4	
	0750374	Spindle, fuel oil injection atomiser ...	4	
	0780030	Spring, fuel oil injection atomiser ...	4	
	0940112	Cap, fuel oil injection atomiser spring—Upper ...	4	
	0571378	Nut, fuel oil injection atomiser spring cap ...	4	
	26460008	Washer, fuel oil injection atomiser spring cap ...	4	
	26460009	Nut, fuel oil injection atomiser holder cap Comprise	4	
	26460007	Screw, fuel oil injection atomiser adjusting 33481 ...	4	
	0571380	Nut, fuel oil injection atomiser adjusting screw locking	4	
	0200642	Union, fuel oil injection atomiser leak-off pipe ...	4	
	26460012	Bolt, fuel oil injection atomiser leak-off pipe banjo ...	4	
	0920148	Washer, fuel oil injection atomiser leak-off pipe union	4	
	26460011	Union, fuel oil injection atomiser inlet connection ...	4	
	26460010	Washer, fuel oil injection atomiser inlet connection union	4	
26	**0994269**	PIPE, FUEL OIL INJECTION ATOMISER LEAK-OFF ...	1	
27	0095315	Bolt, fuel oil injection atomiser leak-off pipe banjo	4	
28	0920148	Washer, fuel oil injection atomiser leak-off pipe banjo bolt ...	8	Prior to Eng. No. 7003879
29	0571261	Nut, fuel oil injection atomiser leak-off pipe connection ...	1	
30	0566002	Nipple, fuel oil injection atomiser leak-off pipe connection ...	1	
	0623769	Pipe, fuel oil injection atomiser leak-off	3	
	0201521	Connection, fuel oil injection atomiser leak-off pipe banjo—No. 1 holder	1	
	0201520	Connection, fuel oil injection atomiser leak-off pipe banjo ...	3	Eng. No. 7003879 onwards
	0095315	Bolt, fuel oil injection atomiser leak-off pipe banjo connection ...	4	
	0920107	Washer, fuel oil injection atomiser leak-off pipe banjo connection bolt	8	
	35205	LIFT PUMP, FUEL OIL (ASSEMBLY)	1	
		Comprising :—		
31	0240578	Housing, fuel oil lift pump inlet and outlet valve	1	
32	0720721	Screw, fuel oil lift pump inlet and outlet valve housing to body	5	
33	0921018	Washer, fuel oil lift pump inlet and outlet valve housing to body screw	5	
34	32517	Valve, fuel oil lift pump inlet or outlet	2	
35	0490559	Joint, fuel oil lift pump inlet and outlet valve to housing ...	1	
36	0910058	Plate, fuel oil lift pump inlet and outlet valve retaining ...	1	
37	0720708	Screw, fuel oil lift pump inlet and outlet valve retaining plate to housing	2	
38	32531	Diaphragm, fuel oil lift pump	1	
39	0780280	Spring, fuel oil lift pump diaphragm return	1	

SECTION "I" Contd.

Fuel Oil Injection Equipment

Ref. No.	Part No.	Description	Qty. Per Engine	Remarks
40	0921059	Washer, fuel oil lift pump diaphragm return spring seating —Steel	1	
41	0921060	Washer, fuel oil lift pump diaphragm return spring seating —Rubber	1	
42	32584	Body, fuel oil lift pump c/w priming lever	1	
43	0520420	Lever, fuel oil lift pump diaphragm operating	1	
44	0520507	Rocker arm, fuel oil lift pump actuating	1	
45	0780241	Spring, fuel oil lift pump actuating rocker arm return ...	1	
46	0610809	Pin, fuel oil lift pump actuating rocker arm and diaphragm operating lever	1	
47	0921058	Washer, fuel oil lift pump actuating rocker arm and diaphragm operating lever pin	2	
48	0180902	Clip, fuel oil lift pump actuating rocker arm and diaphragm operating lever pin retaining	2	
49	0490593	Joint, fuel oil lift pump to distance piece	1	
50	0330943	Distance-piece, fuel oil lift pump to tappet inspection cover ...	1	
51	0490642	Joint, fuel oil lift pump distance piece to tappet inspection cover ...	1	
52	0576002	Nut, fuel oil lift pump retaining	2	Obsolete—Use
53	0920053	Washer, fuel oil lift pump retaining nut	2	0576102
	0576102	Nut, fuel oil lift pump retaining	2	
54	0571259	Nut, fuel oil lift pump inlet and outlet ports	2	Prior to Eng. No. 7003671
55	0560236	Nipple, fuel oil lift pump inlet and outlet ports	2	
	0571346	Nut, fuel oil lift pump inlet and outlet ports	2	Eng. No. 7003671 onwards
	0566004	Olive, fuel oil lift pump inlet and outlet ports	2	
56	0700279	Push rod, fuel oil lift pump operating	1	
	0650756	Plug, fuel pump—Idling stop screw hole	1	
57	**33418**	FILTER, FUEL OIL (ASSEMBLY)—(TYPE F4/1)	1	Obsolete—Use 33425
	33425	FILTER, FUEL OIL (ASSEMBLY)—(TYPE F4/2)	1	
		Comprising :—		
	0240742	Cover, fuel oil filter	1	
	0650743	Plug, fuel oil filter cover	1	
	0490752	Joint, fuel oil filter cover to housing	1	
	0571395	Cap nut, fuel oil filter cover retaining	1	
	0170157	Circlip, fuel oil filter cover retaining nut	1	
	31944	Element, fuel oil filter	1	
	0640104	Seal, fuel oil filter element—Top	1	Included in 31944
	0490586	Seal, fuel oil filter element—Bottom	1	
	0770074	Sleeve, fuel oil filter element locating	1	
	0921047	Washer, fuel oil filter element pressure spring	1	
	0780031	Spring, fuel oil filter element pressure	1	
	0190120	Collar, fuel oil filter housing	1	
	0640122	Seal, fuel oil filter housing	1	
	0440537	Housing, fuel oil filter	1	
	0650744	Plug, fuel oil filter drain	1	
	0920997	Washer, fuel oil filter drain plug	1	
	33423	Non-return valve, fuel oil filter	1	

SECTION "I" Contd.

Fuel Oil Injection Equipment

Ref. No.	Part No.	Description	Qty. Per Engine	Remarks
	0102214	BRACKET, STOP AND THROTTLE CONTROL RETURN SPRING ANCHOR (To Timing Gear Housing. Also detailed on Section "E")	1	Eng. No. 7002989 onwards
	0780268	Spring, stop control return	1	
	0996525	Fork-End, stop control lever	1	
	0610758	Clevis Pin, stop control lever fork-end	1	
	0920024	Washer, stop control lever fork-end clevis pin	1	
	0610001	Split-pin, clevis pin retaining	1	

Plate "J"

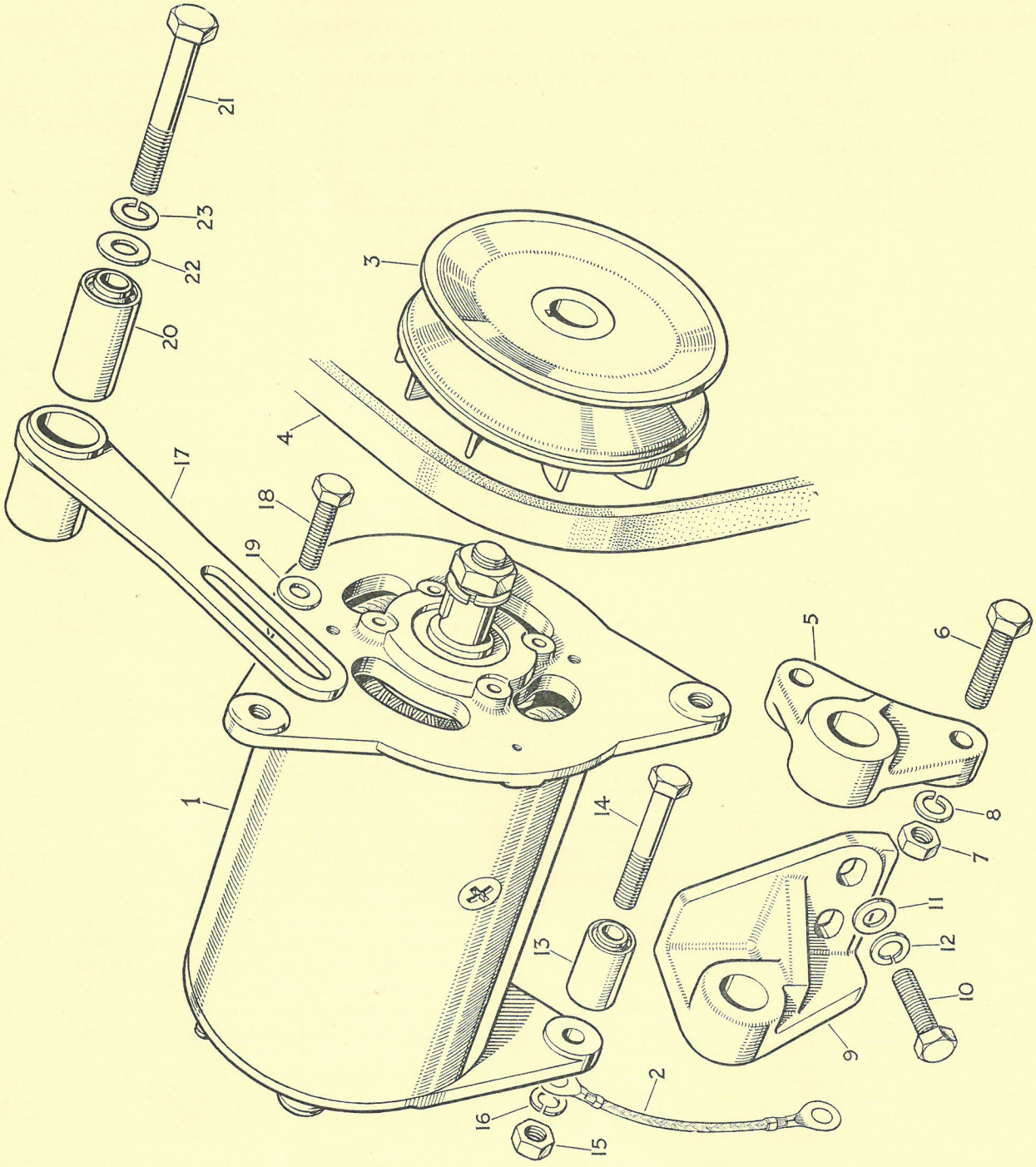

SECTION "J"

Electrical Equipment

Ref. No.	Part No.	Description	Qty. Per Engine	Remarks
1	**31171**	DYNAMO (ASSEMBLY)—(TYPE C39PV2 Despatch No. 22258E)	1	
		Comprising :—		
	34216	BRACKET, DYNAMO COMMUTATOR END (ASSEMBLY)	1	
	0050301	Bush, dynamo commutator end bracket } ...	1	
	31190	Oiler pad, dynamo commutator end bracket c/w disc ... ... } Comprise	1	
	0780269	Springs, dynamo commutator end bracket brush tension ... ... } 34216 ...	1	set
	0190107	Distance-collar, dynamo commutator end	1	
	0994363	BRUSHES, DYNAMO	1	set
	31192	Armature, dynamo	1	
	31193	Field coils, dynamo	1	set
	31194	Post, dynamo field terminal	1	
	0900182	Tube, dynamo field terminal post insulating	1	
	0997141	Retainer, dynamo bearing ring	1	
	0190106	Collar, dynamo drive end bearing	1	
	0040014	Bearing, dynamo drive shaft	1	
	0571354	Nut, dynamo drive shaft	1	
	0920055	Washer, dynamo drive shaft nut	1	
	34217	BRACKET, DYNAMO DRIVE END (ASSEMBLY) ...	1	
	0941027	Plate, dynamo drive end bracket bearing } ...	1	
	0921141	Dished washer, dynamo drive end bracket oil } Comprise ...	1	
	0921142	Corrugated washer, dynamo drive end bracket } 34217 ...	1	
	0095330	Bolt, dynamo brackets clamping	2	
	31195	Sundry parts, dynamo	1	set
2	0994518	Cable, dynamo earthing	1	
3	0670290	Pulley, dynamo drive	1	
4	0070168	Belt, dynamo and water pump driving } Also detailed on ...	1	Prior to Eng. No. 7004039
	0070077	Belt, dynamo and water pump driving ... } Section " H " ...	1	Eng. No. 7004039 onwards
5	**0101873**	BRACKET, DYNAMO SUPPORT—FRONT	1	
6	0746257	Bolt, dynamo front support bracket to engine front mounting plate	2	
7	0576002	Nut, dynamo front support bracket retaining	2	
8	0920053	Washer, dynamo front support bracket retaining nut	2	
9	**0101878**	BRACKET, DYNAMO SUPPORT—REAR	1	
10	0746256	Setscrew, dynamo rear support bracket to cylinder block ...	2	
11	0920003	Washer, dynamo rear support bracket setscrew—Plain	2	
12	0920053	Washer, dynamo rear support bracket setscrew—Spring	2	
13	34015	Bearing, dynamo front and rear support brackets	2	
14	0096234	Bolt, dynamo support brackets to dynamo	2	
15	0576002	Nut, dynamo retaining	2	
16	0920053	Washer, dynamo retaining nut	2	
17	**0520490**	LEVER, DYNAMO ADJUSTING	1	Prior to Eng. No. 7004039. Obsolete—Use 37361107
	37361107	LEVER, DYNAMO ADJUSTING	1	Eng. No. 7004039 onwards
18	0745045	Setscrew, dynamo adjusting lever to dynamo	1	
19	0920003	Washer, dynamo adjusting lever setscrew	1	
20	34014	Bearing, dynamo adjusting lever	1	
21	0096436	Setscrew, dynamo adjusting lever to cylinder head (Also secures Engine front lifting plate)—(Replaces 0096437)	1	Also detailed on Section "B"
22	0920004	Washer, dynamo adjusting lever setscrew—Plain } Used only with	1	
23	0920054	Washer, dynamo adjusting lever setscrew—Spring } 0096437 ...	1	

SECTION "K"

Joints and Gaskets (Sets)

Ref. No.	Part No.	Description	Qty. Per Engine	Remarks
	55287	JOINTS AND GASKETS, COMPLETE ENGINE SET ...	... 1 set	
	55288	JOINTS AND GASKETS, REMOVAL OF HEAD ...	.. 1 set	

142/J.C.C./R.E./3804

Numerical Index

Part No.	Page
31177	31
31190	31
31192	31
31193	31
31194	31
31195	31
31419	5
31441	15
31944	28
32517	27
32529	19
32531	27
32550	9
32578	19
32581	15
32584	28
32586	15
32587	15
32588	15
33214	25
33234	25
33385	15
33389	25
33418	28
33423	28
33425	28
33435	25, 27
33481	27
33841	See 32550
34014	31
34015	31
34050	23
34085	19
34194	19
34216	31
34217	31
35205	27
35209	19
35210	19
35212	19
54925	13
54926	13
54939	17
55280	5
55281	5
55283	11
55284	11
55285	11
55286	13
55287	32
55288	32
55307	11
55386	25
55398	See 56865
55399	See 56866
55855	17
56191	5
56713	See 56865
56714	See 56866
56865	9
56866	9
70395	See 0994528
0020011	19
0040014	31
0050016	13
0050290	11
0050291	11
0050294	11
0050301	31
0050323	25
0050349	17
0070077	23, 31
0070168	23, 31
0080271	23
0080286	25
0080333	19
0095313	15
0095314	11
0095315	27
0095330	31
0095339	15
0096233	15
0096234	31
0096236	23
0096237	15
0096238	5
0096436	9, 31
0101776	13
0101873	31
0101878	31
0102014	15
0102214	15, 29
0140030	17
0140037	17
0140038	17
0150143	9
0150144	19
0150147	13
0150148	15
0170033	13
0170038	11
0170048	25
0170148	25
0170157	28
0180118	15
0180902	28
0180968	23
0190106	31
0190107	31
0190120	28
0200642	15, 27
0201148	25
0201297	5
0201318	13
0201387	25
0201388	25
0201520	27
0201521	27
0230001	9
0240578	27
0240742	28
0240750	19
0240823	19
0240827	19
0260086	11
0330943	28
0350014	5
0350539	25
0360052	23
0380175	23
0380176	11
0410209	See 31171414
0410210	11
0410212	17, 25
0410270	25
0420030	9
0440537	28
0440547	17
0450031	25
0450038	17
0460028	23
0470652	9
0470688	15
0490184	9
0490228	9
0490559	27
0490586	28
0490593	28
0490595	19
0490642	28
0490643	17
0490644	23
0490649	6
0490650	17
0490652	15
0490653	6
0490654	21
0490655	5
0490656	9
0490657	See 0490775
0490658	5
0490659	5
0490660	23
0490672	19
0490685	25
0490687	15
0490696	15
0490724	13
0490725	19
0490740	6
0490752	28
0490753	13
0490775	21
0500006	11
0520420	28
0520490	31
0520507	28
0530021	5
0540150	15
0540155	9
0540179	9
0560236	28
0560244	21
0566002	13, 15, 27
0566004	28
0566005	6
0566007	19, 21
0571259	28
0571261	27
0571263	6
0571293	21
0571346	28
0571348	25, 27
0571351	13
0571352	19, 21
0571354	31
0571378	25, 27
0571379	25
0571380	25, 27
0571381	25
0571395	28
0571416	9
0571417	9
0576001	17
0576002	6, 15, 17, 25, 28, 31
0576004	19
0576031	9
0576051	9
0576091	13
0576102	28
0576106	19
0576111	15
0576151	13
0610001	29
0610002	15

IMPORTANT

For Specification of Screw Threads—See Introduction

Always quote Engine Number when ordering Parts

FIT ONLY GENUINE PERKINS PARTS

Numerical Index

Part No.	Page
0610011	19
0610758	29
0610809	28
0610844	17
0610846	11
0610877	15
0623143	13
0623293	21
0623769	27
0630067	19
0630082	19
0640104	28
0640108	11
0640109	11
0640110	11
0640116	9
0640122	28
0650005	15
0650507	13
0650540	9, 21
0650586	9
0650593	5
0650594	5
0650664	5
0650690	19
0650710	9
0650713	9
0650714	5, 9
0650715	5
0650717	5
0650743	28
0650744	28
0650756	28
0650777	5
0670290	31
0670303	23
0670309	11
0670388	23
0700259	28
0700280	13
0720708	27
0720721	27
0720754	11
0720790	13
0720801	25
0726504	19
0730098	17
0730118	5
0730127	5
0730135	6
0730116	13
0745045	31
0745157	19
0745163	5
0746052	17
0746159	19
0746252	21, 23
0746253	15
0746254	6, 17, 25
0746256	31
0746257	31
0746259	5
0746261	23
0746451	15
0746452	9
0746461	17
0746616	5
0749054	17, 21
0750344	23
0750348	13
0750374	25, 27
0770074	28
0780030	25, 27
0780031	28
0780143	9
0780144	9
0780241	28
0780243	19
0780253	15
0780261	13
0780268	29
0780269	31
0780280	27
0780282	19
0780290	19
0780310	21
0780312	19
0800080	21
0825219	9
0826201	5, 17
0826218	5, 25
0826220	5
0826227	9, 15
0826231	9, 15
0826242	9
0826250	9
0826260	9
0826419	9
0826468	5
0826608	5, 19
0830187	21
0840057	15
0840062	19
0860015	13
0900182	31
0910058	27
0910061	9
0910064	9
0910066	15
0920002	15, 17
0920003	9, 13, 15, 17, 21, 25, 31
0920004	9, 15, 34
0920024	29
0920052	17, 19
0920053	5, 6, 15, 17, 21, 23, 25, 28, 31
0920054	9, 15, 31
0920055	19, 31
0920107	15, 27
0920113	25, 27
0920148	15, 27
0920150	5
0920153	15
0920485	13
0920645	23
0920833	19
0920997	28
0921018	27
0921047	28
0921058	28
0921059	28
0921060	28
0921061	19
0921116	13
0921117	9
0921118	11
0921119	11
0921120	11
0921121	11
0921122	13
0921127	5
0921141	31
0921142	31
0921159	17
0921236	15
0921242	25
0921243	25
0921244	25
0921249	9
0940112	27
0940988	17
0940990	9
0940991	23
0941005	17
0941027	31
0941039	21
0941040	21
0941041	21
0941042	21
0941044	17
0941052	6
0941138	19
0941148	19
0941159	6
0941226	17
0994269	27
0994270	23
0994363	31
0994443	6
0994446	6
0994447	6
0994474	17
0994499	19
0994509	13
0994518	31
0994519	25
0994520	25
0994524	See 35354162
0994525	25
0994528	15
0994657	19
0994726	25
0996522	15
0996525	29
0997141	31
0997193	15
0999011	See 55855
0999196	19
0999532	21
2172692	25
26460006	27
26460007	27
26460008	27
26460009	27
26460010	27
26460011	27
26460012	27
31171414	19
35354162	25
37361107	31
37447251	23
37554521	6
37711232	23
41312034	23
41314109	19
41376001	27

IMPORTANT

For Specification of Screw Threads—See Introduction

Always quote Engine Number when ordering Parts

FIT ONLY GENUINE PERKINS PARTS

Perkins

service

Bulletin N° : 1 001

Référence :

Date d'émission : 5 JUILLET 1962

Objet : Supplément au catalogue pièces détachées 4.99

Concerne : les moteurs 4.99 fabrication anglaise, montés sur camionnette "H" Citroën.

Sommaire :

Ce supplément permet la mise à jour du catalogue de pièces détachées anglais, 4.99 n° 3040, 2ème révision Octobre 1959 - et indique les pièces spéciales Citroën.

NOTA : Les anciennes pièces seront fournies jusqu'à épuisement du stock, après il sera livré des ensembles permettant l'interchangeabilité.

REMARQUE : Lorsque les pièces ne sont pas interchangeables, il faut commander les pièces correspondantes au n° de votre moteur. Dans le cas d'interchangeabilité votre magasin vous livrera suivant ses disponibilités.

Société Française des Moteurs Perkins
9 et 11, rue d'Enghien
COLOMBES (Seine)
CHArlebourg 69-27 +

FOR 139-1-0 3-62-5 – R. C. Seine 57 B 6588

SECTION "A"

- BLOC-CYLINDRES -

Repère		Désignation	Nombre	
		- à supprimer :		
1	56191	Bloc-cylindres	1(3)	
		- remplacé par :		
1	58689	Bloc-cylindres	1(3)	à partir du n° moteur .009.407
		- remplacé par :		
1	59844	Bloc-cylindres	1(3)	
		- remplacé par :		
1	80856	Bloc-cylindres	1(2)	à partir du n° moteur 7.030.750
		- à supprimer :		
5	0530021	Chemise	4	
6	0730118	Joint torique de chemise	4	
		- remplacé par :		
5	31358115	Chemise	4(2)	à partir du n° moteur 7030750
6	35713	Joint torique de chemise	8(2)	à utiliser uniquement avec le bloc-cylindres n° 80856
		- à supprimer :		
40	0994447	Tube de jauge	1	
41	0730135	Joint de jauge	1	
42	0566005	Olive de jauge	1	
43	0571263	Ecrou de jauge	1	
		- remplacé par :		
	35772605	Tube de jauge	1(2)	à partir n° 7.008.996
	35772607	Tube de jauge	1(1)	
		- à supprimer :		
44	0941159	Plaque AV de distribution	1	
		- remplacé par :		
44	36256717	Plaque AV de distribution	1(2)	à partir n° 7.007.316
		- à supprimer :		
31	37554521	Couvercle d'inspection des poussoirs avec reniflard	1	à ne plus utiliser
		- remplacé par :		
31	37554113	Couvercle d'inspection des poussoirs sans reniflard	1(1)	voir cache-culbuteurs

../..

PIECES SPECIALES CITROEN

0746652	Vis fixation stabilisateurs	7
PF 51458	Rondelle éventail pour vis ci-dessus	7
PF 99/18519	Support AV moteur	1
PF 50153	Vis fixation support AV (courte)	2
PF 50154	" " " AV (longue)	4
PF 51455	Rondelle frein pour vis ci-dessus	6
PF 51306	Ecrou pour vis ci-dessus	6
PF 99/22008	Durite coudée bloc/tube raccordement	1
PF 55157	Tube raccordement	1
PF 53104	Collier de retenue durite	2
PF 54247	Durite, tube raccordement/radiateur	1

- à ajouter :

PF 99/50009	Manocontact d'huile	1 (côté pompe d'injection).

(1) : Interchangeable

(2) : Non interchangeable

(3) : Il sera fourni le bloc-cylindres 80856 avec 4 chemises 31358115 et 8 joints toriques 35713.

SECTION "B"

- CULASSE ET COLLECTEUR D'ECHAPPEMENT -

Repère		Désignation	Nombre	
		- à supprimer :		
1	56865	Culasse complète	1	
1	56866	Culasse nue	1	
		- remplacé par :		
1	58838	Culasse complète	1(2)	à partir du n° moteur 7.006867
1	58839	Culasse nue	1(2)	
	0826260	Goujon long fixation injecteur	4	Voir section"I" pour porte-injecteurs correspondants
	0826232	" court " "	4	
	0576002	Ecrou pour goujon ci-dessus	8	
		- à supprimer :		
13	0420030	Guide de soupape admis.et echap.	8	
		- remplacé par :		
13	33261723	Guide de soupape admis.et echap.	8(1)	par ensemble, à partir du n° moteur 7.020.388
		- remplacé par :		
	33261723	Guide de soupape échappement	4(1)	par ensemble, à partir du n° moteur 7.040.254
	33261741	Guide de soupape admission	4	
		- à supprimer :		
22	0470652	Chambre de précombustion	4	
		- remplacé par :		
22	37443581	Chambre de précombustion	4(1)	
		- à supprimer :		
17	0150143	Cuvette de ressort de soupape	8	utiliser le nouveau montage
		- remplacé par :		
17	0150143	Cuvette de ress.de soupape adm.	4	
	0150129	" " " " " echap.	4(1)	nouveau montage

PIECES SPECIALES CITROEN

PF 99/22041	Collecteur échappement (sortie AV)	1
PF 99/25063	Joint entre collecteur et culasse	2
PF 51259	Goujon de sortie échappement	2
PF 51625	Rondelle plate pour goujon ci-dessus	2
PF 51322	Ecrou pour goujon ci-dessus	2

(1) : interchangeable
(2) : non interchangeable

../..

PF 99/22039	Tuyauterie d'échappement	1
PF 99/51000	Thermostat	1
PF 99/25007	Raccord prise de température	1
PF 54413	Transmetteur	1
PF 54415	Rondelle joint pour transmetteur	1

SECTION "C"

- VILEBREQUIN - PISTONS ET BIELLES - COUSSINET -

Repère		Désignation	Nombre	
		à supprimer :		
14	0921121	Arrêtoir de vis de bielle	8	
		remplacé par :		
14	31733118	Arrêtoir de vis de bielle	8	A partir du n° moteur 7009240. A utiliser uniquement.
		à supprimer :		
	55283	Piston complet avec segments	4	
17	55307	Piston avec axe et circlips	4	
20	0640110	Segment première gorge	4	
22	0640109	Segment racleur 4° & 5° gorge	8	
		remplacé par :		
	58738	Piston complet avec segments	4(2)	A partir du n° moteur 7007685
17	58710	Piston avec axe et circlips	4(2)	Interchangeable par ensemble complet
20	31361361	Segment 1° gorge	4(2)	
22	31371161	Segment racleur 4° & 5°gorge	8(2)	
		remplacé par :		
	81490	Piston complet avec segments	4(2)	A partir du n° moteur 7034969, ces pistons peuvent être montés sur les moteurs antérieurs au n°7034969 à condition de les changer par jeu complet (4) avec les bielles n°81517
17	81491	Piston avec axe et circlips	4(2)	
18	33261127	Axe de piston (renforcé)	4(2)	
19	2721122	Circlips	8(2)	

Les axes et les pistons ne sont pas vendus séparément.

N O T A : Lorsqu'on ne change que les pistons sur les moteurs antérieurs au n° 7034969, il est prévu des pistons modifiés n° 81484 (complet) ou 81485 (nu). Ces pistons peuvent être montés soit par jeu, soit à l'unité.

9	0050294	Coussinet de vilebrequin	6	
		remplacé par :		
9	31122351	Coussinet de vilebrequin	6(1)	A partir du n° moteur 7023388
		à supprimer :		
	55285	Bielle assemblée comprenant :	4	
16	0050291	Coussinet de bielle(sup.&inf)	8	

../..

(1) Interchangeable
(2) Non interchangeable

Repère		Désignation	Nombre	
		- remplacé par :		
	80048	Bielle assemblée comprenant	4(1)	A partir du n° moteur 7023095
16	31131211	Coussinet de bielle(sup&inf)	8(1)	

Voir nota ci-dessous

		- à supprimer :		
	80048	Bielle assemblée comprenant :	4	
12	55284	Bielle sans coussinet	4	
15	0050290	Bague de bielle	4	
		- remplacé par :		
	81518	Bielle assemblée	4(2)	A partir du n° moteur 7034969. Ces bielles peuvent être montées sur les moteurs antérieurs au n° 7034969 à condition de les changer par jeu complet (4) avec les pistons n° 81490
12	81517	Bielle sans coussinet	4(2)	
15	31134126	Bague pour axe renforcé	4(2)	

N O T A : Lorsque l'on ne change que les bielles sur les moteurs antérieurs au n° 7034969, il est prévu des bielles modifiées n° 81516 (assemblé) ou 81515 (sans coussinet) avec bague n° 31134125. Ces bielles peuvent être montées par jeux ou à l'unité.

		- à supprimer :		
5	0670309	Poulie de vilebrequin	1	
		- remplacé par :		
5	31143552	Poulie de vilebrequin	1(1)	avec repère de calage

(1) : interchangeable

(2) : non interchangeable

N O T A :

Cote réparation	+ 0,25 mm	- 31 122 352	coussinet vilebrequin
" "	+ 0,50 mm	- 31 122 353	
" "	+ 0,76 mm	- 31 122 354	
" "	+ 0,25 mm	- 31 131 212	coussinet bielle
" "	+ 0,50 mm	- 31 131 213	
" "	+ 0,76 mm	- 31 131 214	

Il est préférable de remplacer les coussinets par jeux.

SECTION "D"

- CACHE-CULBUTEURS ET CULBUTEURS -

Repère		Désignation	Nombre	
		- à supprimer		
3	0576091	Ecrou de cache-culbuteurs	2	
		- remplacé par :		
3	0576102	Ecrou de cache-culbuteurs	2(1)	A partir du n° moteur 7005758
		- à supprimer :		
	54925	Ensemble rampe de culbuteurs comprenant :	1	
14	0101776	Support d'axe de culbuteurs	4	
23	0576091	Ecrou pour axe de culbuteurs	8	
		- remplacé par :		
	58529	Ensemble rampe de culbuteurs comprenant	1	à partir du n° moteur 7005758 interchangeable seulement par ensemble
14	0102202	Support d'axe de culbuteurs	4	
23	0576102	Ecrou pour axe de culbuteurs	8(1)	
		- à supprimer :		
25	0700280	Tige de culbuteurs	8	
26	0860015	Poussoir	8	
		- remplacé par :		
25	31434306	Tige de culbuteurs	8	à partir du n° moteur 7006677 Interchangeable par ensemble tige-poussoir "impératif"
26	31434152	Poussoir	8	
		- à supprimer :		
1	0994509	Cache-culbuteurs	1	
6	0150147	Bouchon de cache-culbuteurs	1	
7	0490753	Joint pour " "	1	
		- remplacé par :		
1	37188136	Cache-culbuteurs avec reniflard côté ventilateur	1	utiliser uniquement ce dernier montage
6	2487845	Bouchon de cache-culbuteurs avec joint (grand diamètre)	1	
7	24870002	Joint du bouchon	1	
	0200051	Durite de tube de reniflard	1	
	0180105	Collier de durite	2	
	35732487	Tube rallonge (acier)	1	
		- à supprimer :		
16	0050016	Bague de culbuteurs	8	
		- remplacé par ;		
16	0050132	Bague de culbuteur	8(1)	

(1) : interchangeable

SECTION "E"

- COLLECTEUR ADMISSION ET FILTRE A AIR -

Repère		Désignation	Nombre	
7	0470688	Durite de friction à air	1	à commander sous le n° PF 54226
8	0180118	Collier de durite	2	à commander sous le n° PF 53103
		- à supprimer :		
9	0102014	Support filtre à air	1	
10	0746253	Vis fixation filtre/support	1	
11	0920053	Rondelle frein pour vis ci-dessus	1	
12	0920003	Rondelle plate pour vis ci-dessus	1	
13	0746451	Vis fixation support/culasse	1	
14	0920054	Rondelle frein pour vis ci-dessus	1	
15	0920004	Rondelle plate pour vis ci-dessus	1	
		- remplacé par :		
9	PF 99/23079	Support de filtre à air et cuve à niveau constant	1	à utiliser uniquement
	0746453	Vis fixation support sur culasse	2	
	PF 51638	Rondelle plate pour vis ci-dessus	2	
	PF 51490	Rondelle frein pour vis ci-dessus	2	
	0746253	Vis fixation filtre/support	1	
	PF 51637	rondelle plate pour vis ci-dessus	1	
	PF 51455	Rondelle frein pour " " "	1	
		- à supprimer :		
16	0540150	Collecteur d'admission	1	(il est fourni à la place le 37786161)
22	0650005	Bouchon sur collecteur	1	
24	33385	Bougie de réchauffage	1	(voir nota) (7/8 B.S.P-14f)
		- remplacé par :		
16	37786165	Collecteur d'admission(bougie côté ventilateur)	1(2)	à partir n° moteur 7.023.048 -
24	2666102	Bougie de réchauffage	1(2)	(voir nota)(7/8 UNF-14f)
		remplacé par :		
16	37786166	Collecteur d'admission (bougie côté volant)	1(1)	
24	2666103	Bougie de réchauffage	1(1)	(voir nota)(7/8 UNF 14f)

N O T A : Les bougies de réchauffage doivent être montées sans joint sur le collecteur d'admission.

../..

Repère		Désignation	Nombre	
		- à supprimer :		
	0994528	Cuve à niveau constant comprenant :	1	
29	0150148	Couvercle	1	
31	0997193	Flotteur	1	
32	0910066	Aiguille du flotteur	1	
		- remplacé par :		
	41374405	Cuve à niveau constant comprenant :	1	à utiliser uniquement
	57925	Couvercle avec clapet comprenant :	1	à utiliser uniquement
	37443571	Couvercle nu	1	à utiliser uniquement
	35629	Clapet	1	à utiliser uniquement
	37725118	Couvercle de clapet	1	à utiliser uniquement
		- à ajouter :		
	0746051	Vis fix. cuve à niveau constant sur support	2	
	PF 51491	Rondelle frein pour d°	2	

N O T A : Pour les tuyauteries souples : voir section "I"

SECTION "F"

- DISTRIBUTION -

Repère		Désignation	Nombre	
		- à supprimer :		
1	0140037	Arbre à came	1	
		- remplacé par :		
1	31415222	Arbre à came	1(1)	à utiliser uniquement
		- à supprimer :		
	54939	Carter de distri. complet comprenant :	1	
13	0440547	Carter nu	1	
14	0994474	Rondelle de renf. avec goujon	1	
15	0490643	Joint de rondelle ci-dessus et de plaque de visite	2	
16	0940988	Couvercle d'injection	1	
17	0576001	Ecrou pour couvercle ci-dessus	4	
18	0920052	Rondelle pour ci-dessus	4	
		- remplacé par :		
	58521	Carter de distribution complet comprenant :	1(1)	à partir du n° moteur 7.005.752
13	37161103	Carter nu	1(1)	
		- à supprimer		
	58521	Carter de distribution complet comprenant :	1	
20	0490650	Joint entre carter et plaque	1	
13	37161103	Carter nu	1	
		remplacé par :		
	58833	Carter de distribution complet comprenant :	1	à partir du n° moteur 7.007.316 (2)
20	36813123	Joint entre carter et plaque	1	
13	37161104	Carter nu	1	
		- à supprimer :		
22	0920003	Rondelle plate de fix. carter distribution (gros diam.)	4	
26	0920003	Rondelle plate fix. carter distribution (gros diam.)	1	
29	0920003	Rondelle plate fix. carter de distribution (gros diam.)	3	reste 1 rondelle
32	0920002	Rondelle plate de fix. carter de distribution (petit diam.)	3	
		- remplacé par :		
22	36151505	Plaquette d'appui pour fix. carter distribution (gros diam.)	7(1)	à utiliser de préférence
26	36151505	Plaquette d'appui pour fix. carter distribution (gros diam.)	1(1)	
32	36151506	Plaquette d'appui pour fix. carter distribution (petit diam)	3(1)	

../..

Repère		Désignation	Nombre
		- à supprimer	
27	0749054	Vis fix. carter distribution	1
		- remplacé par	
27	0826248	Goujon fixation carter distri.	1 (1)
	32726511	Ecrou long (servant de repère de calage)	1

(1) : interchangeable

(2) : non interchangeable

SECTION "G"

- POMPE A HUILE - CARTER - POMPE A HUILE -

Repère		Désignation	Nombre	
		- à supprimer :		
15	0826608	Goujon fixation filtre à huile	2	
16	0576004	Ecrou pour goujon ci-dessus	2	
		- rempladé par :		
	0746653	Vis de fixation filtre à huile	2(1)	à partir du n° moteur 7.006.449
		- à supprimer :		
28	0745157	Vis fixation pompe à huile	1	
		- remplacé par :		
28	0746201	Vis fixation pompe à huile	1(1)	à partir du n° moteur 7.006.994
		- à supprimer		
43	0920003	Rondelle plate de fixation carter d'huile	7	reste 1 rondelle
		- remplacé par :		
43	36151505	Plaquette d'appui de fixation carter d'huile	7(1)	à utiliser de préférence
		- à supprimer :		
26	0746159	Vis fixation tête de pompe à huile	4	
		remplacé par :		
26	0746059	Vis fixation tête de pompe à huile	4(1)	
		- à supprimer :		
38	0830187	Carter d'huile	1	
		- remplacé par :		
38	37171104	Carter d'huile	1(1)	à partir du n° moteur 7.006.454
		- remplacé par :		
38	37171116	Carter d'huile	1(1)	à partir du n° moteur 7.025.484
		- remplacé par :		
38	37171118	Carter d'huile	1	à partir du n° moteur 7.037929 Impératif pour Citroën

../..

Remère		Désignation	Nombre	
		- à supprimer :		
42	0749054	Vis fixation carter d'huile	16	
		- remplacé par :		
	0746254	Vis courte de fix. carter d'huile	8	(1)à utiliser de préférence
	0746255	Vis longue de " " "	8	
	0920053	Rondelle frein pour vis ci-dessus	16	
		- à supprimer :		
	32578	Filtre à huile complet	1	
		- remplacé par :		
	35272	Filtre à huile complet comprenant :	1	à partir du n° moteur 7.011.104
	26540043	Tête de filtre	1	
	+ 0490725	Joint entre corps et tête	1	+ pièces communes aux deux filtres
	+ 35212	Elément filtrant	1	
	26540044	Corps de filtre comprenant :	1	(1) interchangeable par ensemble
	+ 0840062	Corps nu	1	
	26540045	Boulon de fixation	1	
	+ 0921061	Rondelle d'étanchéité	1	
	26540022	Ressort d'élément	1	
	+ 0941138	Plaque inférieure d'élément	1	
	+ 0941148	Plaque intermédiaire d'élém.	1	
		- à supprimer :		
14	0490672	Joint entre filtre et bloc-cylindres	1	
		- remplacé par :		
14	36862517	Joint entre filtre et bloc-cylindres	1(1)	à utiliser de préférence.

SECTION "H"

- POMPE A EAU ET MONTAGE DU VENTILATEUR -

Repère		Désignation	Nombre	
		- à supprimer :		
	41312034	Pompe à eau complète comprenant :	1	
	37711232	Corps de pompe	1	
	37447251	Turbine	1	
	0670388	Poulie	1	
	0096236	Vis fixation pompe (longue)	2	
	0746261	" " " (courte)	1	
	0920053	Rondelle frein	3	
7	0490644	Joint entre corps et plaque	1	
8	0940991	Plaque de montage	1	
9	0490660	Joint entre plaque et bloc cylindres	1	
11	0746261	Vis fixation pompe sur bloc cylindres (courte)	1	
		- remplacé par :		
	41312072	Pompe à eau complète comprenant :	1	
	37711234	Corps de pompe	1 (1)	A partir du n° moteur 7009407
	37447252	Turbine	1 (1)	
	0670303	Poulie	1 (1)	
	36866713	Joint entre plaque et bloc cylindres	1	Interchangeable par ensemble
	36243515	Plaque de montage	1 (2)	
	36866421	Joint entre plaque et corps de pompe	1	
	0096236	Vis fixation pompe (longue)	2	
	0096234	" " " (courte)	2	

- PIECES SPECIALES CITROEN -

PF 54226	Durite sortie d'eau/radiateur	1
PF 53105	Collier de serrage	2
PF 99-1001-4	Support de ventilateur assemblé	1
PF 99-23038	Support de ventilateur nu	1
PF 99-25137	Axe de ventilateur	1
PF 51460	Rondelle frein	1
PF 51660	Rondelle plate	1
PF 51311	Ecrou	1
PF 99-25138	Entretoise de roulement	1
PF 52052	Roulement	2
PF 51850	Jonc d'arrêt Ø 40 I	1
PF 51906	Jonc d'arrêt Ø 17 E	1

../..

Repère	Désignation	Nombre
PF 99-1001	Vis de blocage de l'axe	1
PF 51729	Rondelle éventail	1
PF 99-21008	Poulie de ventilateur	1
PF 25811	Entretoise de ventilateur	1
PF 50158	Vis fixation entretoise	4
PF 53136	Arrêtoir de ventilateur	2
0746208	Vis de fix.support/culas.	2
PF 51455	Rondelle éventail	2
PF 51637	Rondelle plate	2
PF 99/21003	Contre-poulie/pompe eau	1
0746208	Vis de fix. contre-poulie	4
PF 53136	Arrêtoir pour contre-poulie	2
0360052	Ventilateur	1
PF 55356	Courroie de ventilateur	1

SECTION "I"

- POMPE D'INJECTION - FILTRE GAS OIL -
- POMPE ALIMENTATION - COMMANDE D'ACCELERATION -

Repère		Désignation	Nombre	
		- à supprimer :		
1	33234	Pompe d'injection (DPA 3246143)	1	
		- remplacé par :		
1	33287	Pompe d'injection (DPA 3246285)	1(2)	à partir du n° moteur 7.015.055
		- remplacé par :		
1	33282	Pompe d'injection (DPA 3246235)	1(1)	
		- remplacé par :		
1	36161	Pompe d'injection (DPA 3246685)	1(1)	à partir du n° moteur 7.032.597
		- à supprimer :		
	55386	Jeu de tuyauterie d'injection comprenant	1	
16	0994525	Tuyauterie d'injection 1°cylindre	1	avec raccordset olives
17	35354162	Tuyauterie d'injection 2° "	1	
18	0994520	Tuyauterie d'injection 3° "	1	
19	0994519	Tuyauterie d'injection 4° "	1	
		- remplacé par :		
	59065	Jeu de tuyauterie d'injection comprenant :	1(2)	à partir du n° moteur 7.007.860
16	35355213	Tuyauterie d'injection 1°cylindre	1	
17	35353163	Tuyauterie d'injection 2° "	1	
18	35353164	Tuyauterie d'injection 3° "	1	
19	35354166	Tuyauterie d'injection 4° "	1	
		- à supprimer :		
	41376001	Ensemble injecteurs/porte injecteurs	4	
	0571348	Ecrou cranté de fixation porte inj.	4	
		- remplacé par :		
	2646237	Ensemble injecteur/porte injecteurs	4(2)	à partir du n° moteur 7.006.867 voir section "B" pour culasse correspondante
	36173441	Bride de fixation porte injecteur	4(2)	

(1) : interchangeable

(2) : non interchangeable

../..

Repère		Désignation	Nombre	
		- à supprimer :		
	2646237	Ensemble injecteur/porte inj.	4	
	33481	Porte injecteur complet	4	
	26460011	Raccord vissé sur porte inj.	4	
	26460010	Joint pour raccord ci-dessus	4	
		- remplacé par :		
	2646238	Ensemble injecteur/porte inj.	4	à partir du n° moteur 7.007.860 (2)
	2646512	Porte injecteur assemblé	4	
	33555118	Raccord vissé sur porte inj.	4	
	0921243	Joint pour raccord ci-dessus	4	
	26460005	Ecrou fixation sur porte inj.	4	
		- à supprimer :		
	2646238	Ensemble injecteur/porte inj.	4	
	36173441	Bride de fixation porte injecteur	4	
		- remplacé par :		
	2646254	Ensemble injecteur/porte inj.	4	à partir du n° moteur 7.039.847 interchangeable par ensemble.
	36173451	Bride de fixation porte injecteur	4	
		- à supprimer :		
51	0490642	Joint de pompe d'alimentation (côté plaque)	1	
		- remplacé par :		
51	36862126	Joint de pompe d'alimentation (côté plaque)	1(1)	
		- à supprimer :		
	0576102	Ecrou fixation pompe d'alimenta.	2	(voir repère 52)
		- remplacé par :		
	33221115	Ecrou fixation pompe d'alimenta.	2(1)	
		- à supprimer :		
57	33425	Filtre à gas oil - CAV	1	
		- remplacé par :		
57	35532	Filtre à gas oil - CAV	1(1)	à partir du n° moteur 7.006.198
		- remplacé par :		
57	2656653	Filtre à gas oil - AC	1(2)	à partir du n° moteur 7.015.055
		- remplacé par :		
57	2656621	Filtre à gas oil comprenant - CAV	1(2)	à partir du n° moteur 7.017.648
	26560015	Vis d'assemblage	1	
	26560016	Joint de vis	1	
	26560013	Couvercle	1	

../..

26560014	Joint intérieur d'élément filtrant	1	
26560017	Elément filtrant	1	
0490786	Joint entre élément et couvercle	2	
26560039	Cuve inférieure	1	
33423	Valve de retenue(sur filtre à gas oil)	1	
0920146	Joint pour ci-dessus	1	
PF 50226	Vis fixation filtre à gas oil	2	montage Citroën
PF 51457	Rondelle frein pour ci-dessus	2	
PF 99/22052	Tuyauterie souple retour injec.	1	revoir lettre de service n° 114
PF 53440	Joint de vis banjo pour ci-dessus	8	
0095344	Vis creuse pour tuyauterie ci-dessus (côté filtre)	1	
0920146	Joint pour vis ci-dessus	2	
PF 99/22067	Tuyauterie souple pompe aliment. à filtre à gas oil	1	
PF 99/22022	Tuyauterie souple arrivée gas oil	1	
PF 99/22061	Tuyauterie souple pompe injection à filtre à gas oil retour	1	
PF 99/22054	Tuyauterie souple tube à niveau constant réservoir	1	
PF 99/22051	Tuyauterie souple préfiltre à pompe d'alimentation	1	
PF 57002	Tuyauterie souple cuve à niveau constant à bougie de réchauffage	1	
PF 99/25062	Collier court de tuyauterie souple	1	montage Citroën
PF 99/25061	Collier long " " "	1	

PREFILTRE ET SON MONTAGE

PF 53406	Préfiltre à gas oil	1
PF 99/23054	Support de préfiltre	1
0746451	Vis fixation support sur bloc	2
PF 51490	Rondelle frein pour vis ci-des.	2
PF 99/25083	Vis fixation préfiltre sur sup.	1
PF 53407	Rondelle joint pour vis ci-des.	1
PF 51339	Ecrou H pour vis fix. préfiltre	1
PF 51457	Rondelle frein pour ci-dessus	1

COMMANDE D'ACCELERATION PIECES SPECIALES CITROEN

PF 99/25025	Support commande d'accélération (fix. sur coll. échappement)	1
PF 99/25003	Pontet serre-câble/support commande d'accélération	2
PF 50001	Vis fix. pontet	2
PF 51727	Rondelle frein pour ci-dessus	2
PF 51302	Ecrou pour ci-dessus	2
PF 99/25019	Levier d'accélération pour sup.	1
PF 50159	Vis axe de levier	1

../..

PF 51337	Ecrou H pour vis axe de levier	1	
PF 51731	Rondelle frein pour ci-dessus	1	
PF 54031	Rotule d'articulation (rivée sur levier)	3	(2)/levier/support (1)/levier/pompe
PF 54032	Cage à rotule pour ci-dessus	3	
PF 99/25030	Etrier sur levier de stop	1	
PF 99/25036	Axe d'étrier	1	
PF 51622	Rondelle plate pour axe	1	
PF 51780	Goupille fendue pour axe ci-des.	1	
PF 99/25140	Ressort de levier de stop	1	
PF 99/25002	Plaque d'attache du ressort (fix. sur carter distribution)	1	
PF 10317	Plaquette de butée ralenti (fixée sous écrou de rotule)	2	
PF 99/25038	Serre-câble de ralenti	1	
PF 50700	Vis de serre-câble	1	
90560002	Embout de câble de ralenti	1	
90740010	Vis de l'embout	1	

SECTION "J"

- EQUIPEMENT ELECTRIQUE -

- PIECES SPECIALES CITROEN -

PF 54574	Dynamo	1	(négatif à la masse)
PF 50163	Vis TH pour fixation dynamo/support	2	
PF 51455	Rondelle frein pour vis ci-dessus	2	
PF 51625	Rondelle plate pour vis ci-dessus	2	
PF 51306	Ecrou H pour vis ci-dessus	2	
PF 55360	Courroie de dynamo	1	
PF 99/18509	Support AV de dynamo	1	
PF 99/18510	" AR " "	1	
PF 53030	Silent-bloc pour supports	2	
0746256	Vis fixation support AR	2	
PF 51637	Rondelle plate pour vis ci-dessus	2	
PF 51455	Rondelle frein pour vis ci-dessus	2	
PF 99/70.000	Tresse de masse pour dynamo	1	
PF 99/18.511	Levier tendeur de dynamo	1	
PF 53031	Silent-bloc de levier ci-dessus	1	
PF 99/25041	Goujon de levier tendeur	1	(côté silent-bloc)
PF 51627	Rondelle plate pour goujon ci-dessus	1	
PF 51457	Rondelle frein pour goujon ci-dessus	1	
PF 51308	Ecrou H pour goujon ci-dessus	1	
PF 50155	Vis TH de levier tendeur	1	(côté dynamo)
PF 51625	Rondelle plate pour vis de levier	1	
PF 51455	Rondelle frein pour vis de levier	1	
PF 51306	Ecrou H pour vis de levier	1	
PF 54582	Démarreur	1	
PF 50753	Vis fixation démarreur	2	
PF 51459	Rondelle frein de vis ci-dessus	2	
PF 51629	Rondelle plate de vis ci-dessus	2	
PF 54570	Régulateur de tendeur	1	
PF 50157	Vis TH pour support AV	2	
PF 51455	Rondelle frein pour vis ci-dessus	2	
PF 51306	Ecrou H pour vis ci-dessus	2	

SECTION "K"

- COLLECTIONS DE JOINTS -

- à supprimer :

55287	Pochette de joints révision moteur	1

- remplacé par :

59188	Pochette de joints révision moteur	1(2) à partir du n° moteur 7.007.316

N O T A : A partir du n° moteur 7.030.750, commander avec la pochette de joints : 8 joints de chemises n° 35.713

(1) : interchangeable

(2) : non interchangeable

SECTION "L"

- FACE ARRIERE ET VOLANT -

PF 99/14304	Plaque d'adaptation AR	1
PF 25198	Pion de centrage plaque AR	2
0746454	Vis fixation plaque AR	6
PF 51490	Rondelle frein pour vis ci-dessus	6
PF 99/15508	Volant	1
PF 99/25040	Couronne de démarreur	1
PF 52110	Roulement pilote	1
0745180	Vis fixation volant	5
0921300	Plaquette arrêtoir vis volant	1

Perkins Parts

for

Perkins Products

Printed in England

LIST No. 3040

FOUR 99 VEHICLE ENGINES

OCTOBER, 1959