A

MAN 008162

REMOVAL AND FITTING
RECONDITIONING
ELECTRICAL SYSTEM

CITROËN
AUTOMOBILES CITROËN
Société anonyme régie par les articles 118 à 150 de la loi sur les sociétés commerciales

SERVICES A LA CLIENTÈLE
DÉPARTEMENT TECHNIQUE APRÈS-VENTE

REPAIR MANUAL MAN 008162

VOLUME 2

MAY 1982

A VEHICLES

ALL TYPES

PRODUCED SINCE 1963
(Except AMI 6 and AMI 8)

Supplement No. 1 (May 1980) included
No. 2 (April 1982) included

FIRST SECTION : **REMOVAL and FITTING**

SECOND SECTION : **RECONDITIONING**

THIRD SECTION : **ELECTRICAL SYSTEM**



CAPITAL 965 860 000 F
C.C.P. PARIS 121 - 54 S

SIÈGE SOCIAL : 117 A 167, QUAI ANDRÉ-CITROËN 75747 PARIS CEDEX 15
TÉLÉPHONE : (1) 578.61.61 - TÉLÉGRAMME ET TÉLEX : 270817 CITROËN PARIS

R.C. PARIS B 642 050 199
SIRET 642 050 199/000 16

USING THE MANUAL

PREPARATION

To facilitate the use of the Manual, operations have been grouped in two volumes :

- Volume I contains :
  - the CHARACTERISTICS - ADJUSTMENTS - CHECKS

  All workshops should be in possession of this volume, which is essential for carrying out adjustments or emergency repairs.
- Volume II contains :
  - REMOVAL and FITTING
  - RECONDITIONING
  - ELECTRICAL SYSTEM

The above volumes are sold separately. They are presented bound in blue Fibrex binder with a « MULTO » type mechanism to facilitate the insertion of amendments or the extraction of a particular operation required by the workshop.

COMPOSITION

Every volume comprises :

- the list of operations contained in the volume
- these operations filed in numerical sequence
- the list of all the tools mentioned in the operations and the manufacturing drawings for special tools which are not sold but are intended to be manufactured by the Repair Department itself.

OPERATIONS

The sequence of operations has been devised in order to obtain the best quality of work in the shortest possible time.

The numbering of the operations is made up as follows :

a) The code letter for the car : « A »

b) A number made up of three figures denoting the unit or its element

c) A figure code designating the type of repair :

- the figures 0 0 0 indicate the characteristics of the car
- the figures 0 0 indicate the characteristics of the unit
- the figure 0 indicates checks and adjustments
- the figures 1, 4, 7 indicate removal or fitting
- the figures 2, 5, 8 indicate dismantling or reassembly and
- the figures 3, 6, 9 indicate reconditioning

TOOLING

Special tooling is denoted in the text by a number followed by the letter T.

These tools are sold by :
- Etablissements FENWICK, Departement AMA, 24 Bd Biron - 93404 ST-OUEN - FRANCE - Tel. 252-82-85

Additional tools of local manufacture are indicated in the text by a number preceded by the index MR. drawings for these tools appear at the end of the particular volume filed in numerical order.

TIGHTENING TORQUES

Torques are expressed in the following units :
- in metres Newton (mΛN) : the legal unit for measuring torque
- metre-kilogrammes (m.kg), since torque wrenches at present in use are sometimes graduated in m.kg :
  1 m.kg = 9.81 mΛN (which may also be written mΛN or m.N)
- in foot pounds (ft.Ibs) converted at 7.22 ft.Ibs = 1m.kg

The numbers corresponding to the torques are « rounded off »

Examples : 2 mΛN = 0.2 m.kg = 1.4 ft.Ibs
60 mΛN = 6 m.kg = 43 ft.Ibs

IMPORTANT : When a tightening torque figure is followed by the words « torque wrench », the operation must OF NECESSETY be carried out with a torque wrench.

ADVISORY SERVICE

For all technical information concerning these vehicles, please contact :

CITROEN CARS Limited
After-Sales Department
SLOUGH SL 1. 4 QA - GREAT BRITAIN

or :

AUTOMOBILES CITROEN
Département Technique Après-Vente
163, avenue G. Clémenceau
92000 NANTERRE - FRANCE

MANUAL N° 816 - 2

FIRST SECTION

REMOVAL and FITTING

LIST OF OPERATIONS IN THE FIRST SECTION OF THE MANUAL No. 816-2

« A » Vehicles

Operation number	DESCRIPTION
	ENGINE - CARBURETTOR - IGNITION
A. 100-1	Removing and fitting an engine-gearbox assembly *(AZL vehicles and Vans All Types)*
AY. 100-1	Removing and fitting an engine-gearbox assembly *(AY All Types)*
AM. 100-1	Removing and fitting an engine-gearbox unit
♦ AZ. 100-1	Removing and fitting an engine-gearbox unit *(AZ All Types 7/1981 ⟶)*
A. 100-4	Removing and fitting an engine only
A. 111-1	Removing and fitting the piston rings *(Engine All Types)*
A. 112-4	Work on the cylinder head :
	- Removing and fitting a push-rod sleeve
	- Removing and fitting a shaft, a rocker arm, a push-rod, a valve spring, or a sealing joint
A. 120-4	Eliminating leaks from the engine bearings
A. 241-1	Work on the engine cooling system :
	- Removing and fitting a fan
	- Removing and fitting a fan cowl
	CLUTCH - GEARBOX
A. 312-1	Work on the clutch :
	- Adjusting the position of the centrifugal clutch drum
A. 334-1	Work on the gear-change mechanism
	FRONT AXLE
A. 410-1	Removing and fitting a front axle steering assembly
A. 413-1	Work on a front hub and pivot :
	- Removing and fitting a front hub or front hub bearing
	- Removing and fitting a pivot or kingpin
	REAR AXLE
A. 422-1	Removing and fitting a rear arm
	SUSPENSION
A. 434-1	Removing and fitting a suspension unit
AM. 435-4	Working on an anti-roll bar
	STEERING
A. 441-1	Work on the steering wheel and steering column :
	- Removing and fitting a steering column fixed tube or an anti-theft device *(All Types except Dyane)*
	- Removing and fitting the steering column fixed tube or anti-theft device *(Dyane 4 and 6)*
	- Removing and fitting a steering wheel or a drive-shaft
	BRAKES
A. 451-1	Work on the front brakes :
	- Removing and fitting the brakes shoes or wheel cylinder
	- Removing and fitting a brake backplate, a differential shaft, or a bearing sealing bush
AM. 451-1	Work on the front brakes (vehicles fitted with disc brakes)
A. 451-4	Work on the rear brakes :
	- Removing and fitting a brake drum hub or a bearing or sealing bush
	- Removing and fitting the brakes shoes
	TOOLS
	List of tools mentioned in this section
	Manufacturing drawings for tools not sold

Supplement No. 2 to Manual 816-2 (CORR)

REMOVING AND FITTING AN ENGINE GEARBOX ASSEMBLY
AZL Vehicles and Vans All Types

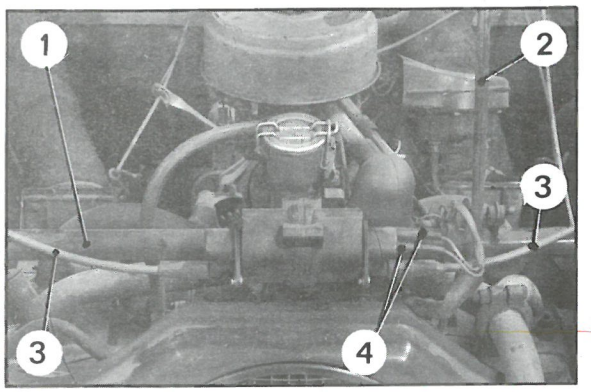

PL. 7

REMOVAL

1. Remove the bonnet, bonnet side panels and front wings.
2. Disconnect battery leads.
3. **Removing headlamp bracket assembly :**
   a) Disconnect :
   - sparking plug leads (3) from coil,
   - connectors from headlamp leads,
   - leads to coil (4),
   - headlamp bracket earth lead, from crankcase breather.

   b) Disconnect petrol supply line from pump or from petrol supply tube on left-hand sidemember and plug tube.
   c) Remove :
   - bonnet stay (2),
   - headlamp adjusting knob,
   - headlamp bracket fixing screws on sidemembers,
   - bonnet lock.

   d) Remove coil, headlamp bracket and control assembly (1).
4. Remove fan (extractor 3006-T a).
5. Disconnect leads :
   - from dynamo or alternator,
   - from distributor (6) *(if necessary)*,
   - from horn,
   - from starter,
   - from earth on gearbox.

   Free harness from lug and from clip (5) *(6 volt vehicles only)* and place it on scuttle.
6. Disconnect :
   - gear change selector rod from gear change lever (7).
   - accelerator control rod from carburettor and free ball-end from rubber socket on accelerator pedal,
   - choke control (10),
   - starter control (11) *(if necessary)*,
   - heating controls (9),
   - heating ducts (8),
   - sealing sheath for drive shaft splines.

   NOTE : *Vehicles equipped with engines with heat exchangers :*
   Remove exchangers without disconnecting heating controls, and disconnect expansion chamber from gearbox. Remove retaining pin or speedometer cable screw and free speedometer cable.

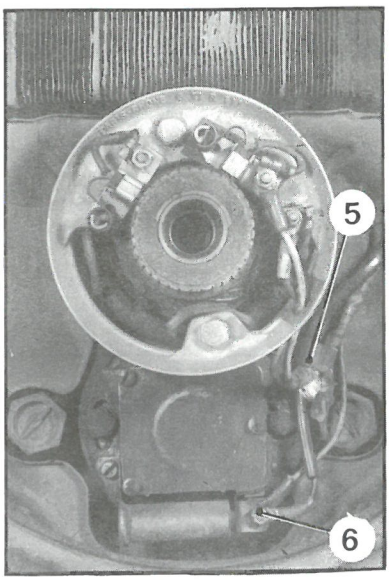

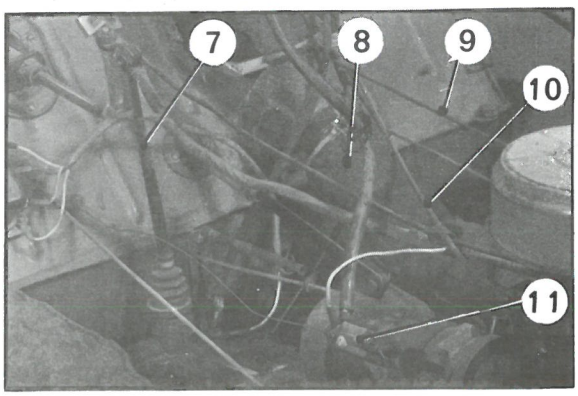

PL. 4

AZ - AZU - AK VEHICLES EARLY MODEL

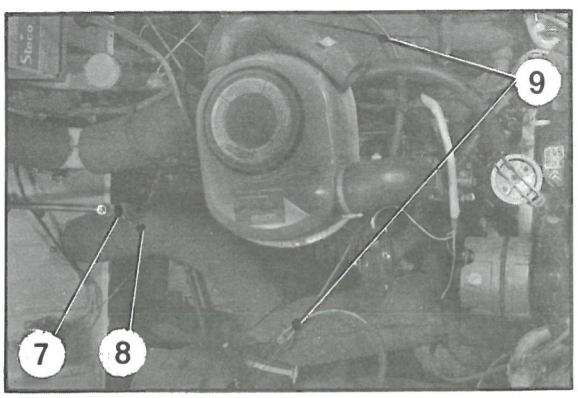

10819

AZ - AZU - AK VEHICLES NEW MODEL
(Pendent pedal gear)

PL. 19

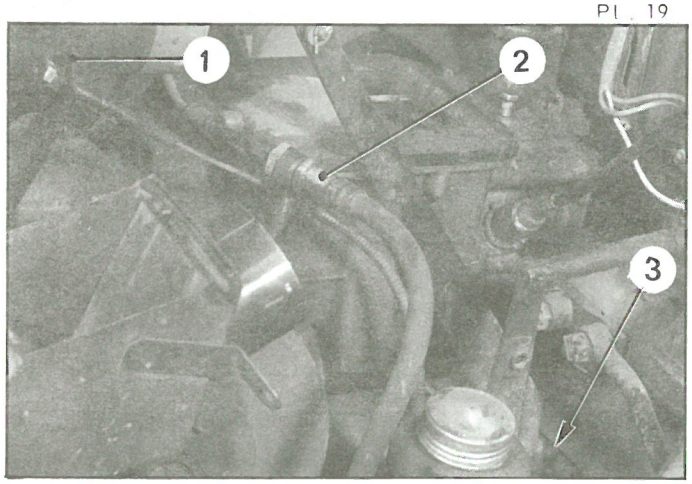

10836

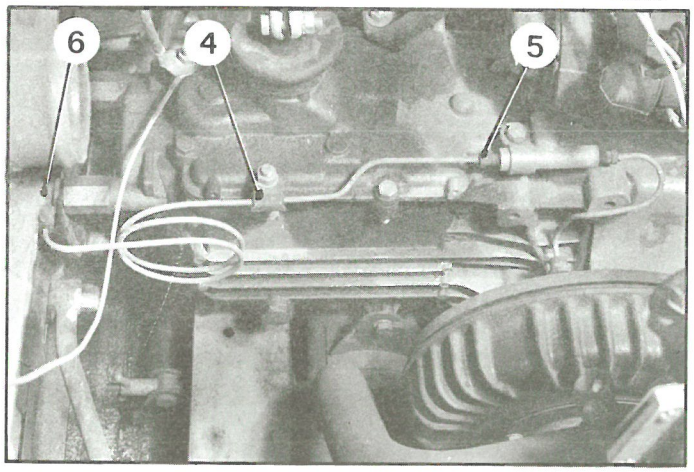

PL. 30

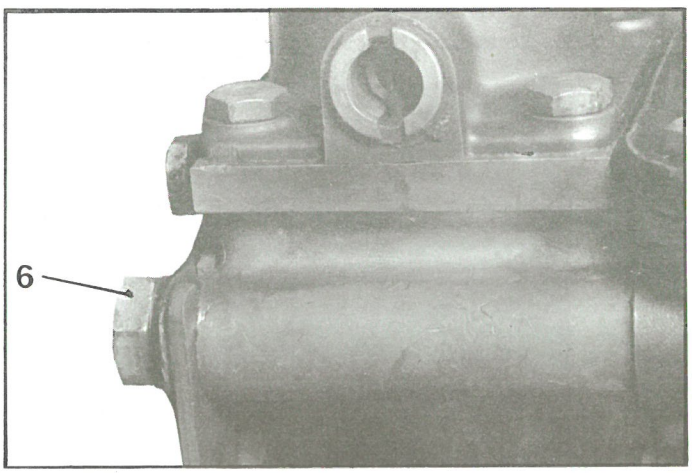

7. Disconnect :
   - clutch control from clutch fork (1) or from pedal gear *(vehicles equipped with pendent pedal gear)*,
   - front brake flexible feed hose (2) or union (5) and lug (4),
   - expansion chamber from silencer connecting pipe and remove handbrake cable adjusting nuts (3).
8. **Removing the engine gearbox assembly :**
   a) Remove the two screws for securing the engine front flexible mountings.
   b) Slacken the screws (6) securing the gearbox rear flexible mounting.
   c) Use chain MR. 630-44/4 to raise engine gearbox assembly.
   Gently raise and free brake cables from their passage in platform crossmember.
   Free nylon tubes from lugs on protection plate *(if necessary)*.

   NOTE : Should a chain or lifting device not be available the assembly can be removed by hand by two operators.

   Place the assembly on the ground (with a 15 cm thick chock under the gearbox in order not to distort the silencer).

   Free chain.

PL. 194

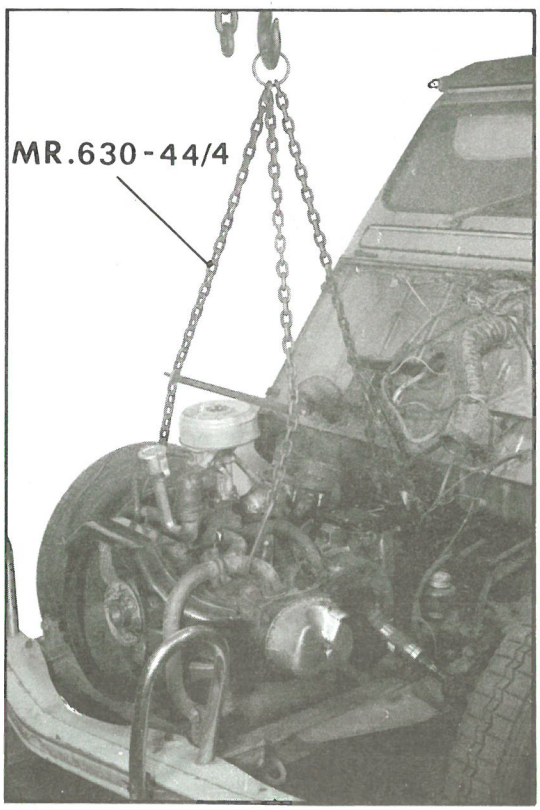

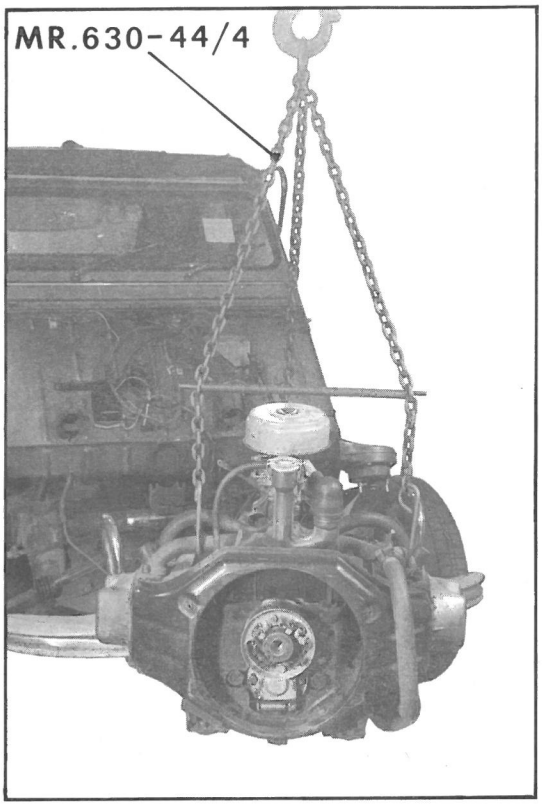

FITTING

9. Fitting the engine-gearbox assembly :

a) Position lifting chain MR. 630-44/4 and offer up the engine-gearbox assembly ;
Lower it and engage :
- drive shafts (with splines previously greased) (TOTAL MULTIS grease) into sliding yokes,
- handbrake cables complete with their sheath stops into the passages in platform cross-member.

NOTE : *Vehicles equipped with simple cross-head drive shafts :*
Forks of sliding yoke and splined shaft must be in perfect alignment to ensure constant velocity of movement.

b) Keep on lowering the assembly :
- pass brake cable end-pieces into lever barrels,
- insert screws (1) in axle crossmember bracket.

c) Position front engine mounting fixing screw without tightening (lock washers under the heads).

Tighten rear mounting fixing screws (1) (knock over lock washer tabs if necessary).

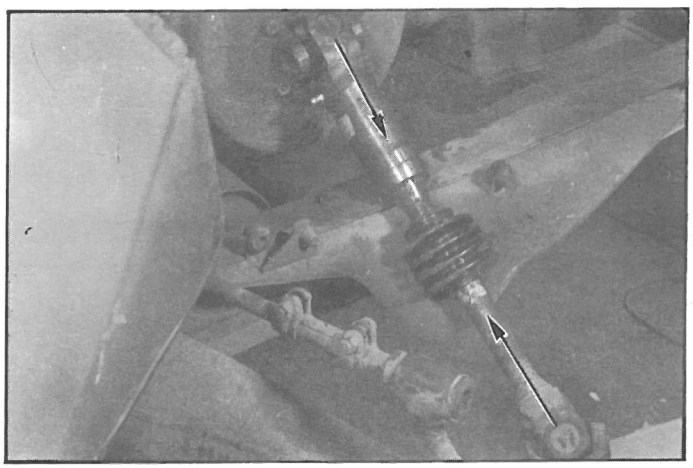

Tighten front mounting fixing screws and knock over lock washer tabs.

d) Screw on temporarily handbrake cable adjusting nuts.

e) Remove lifting chain.

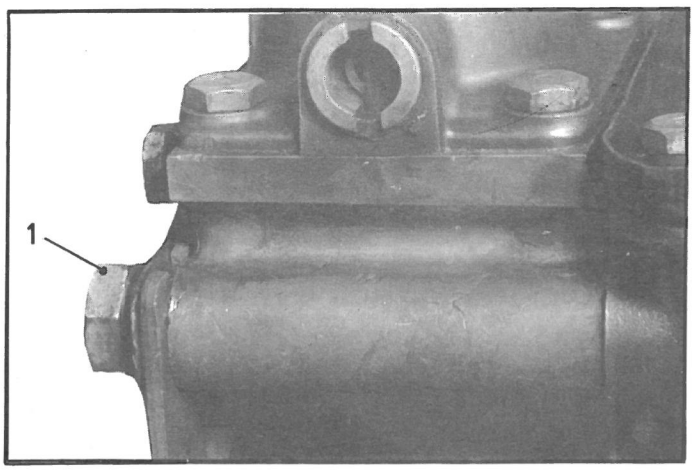

10. Fit drive shaft gaiters and tighten clips.

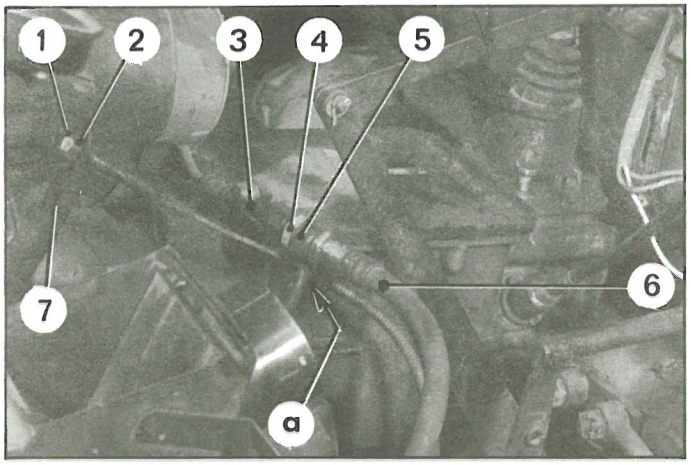

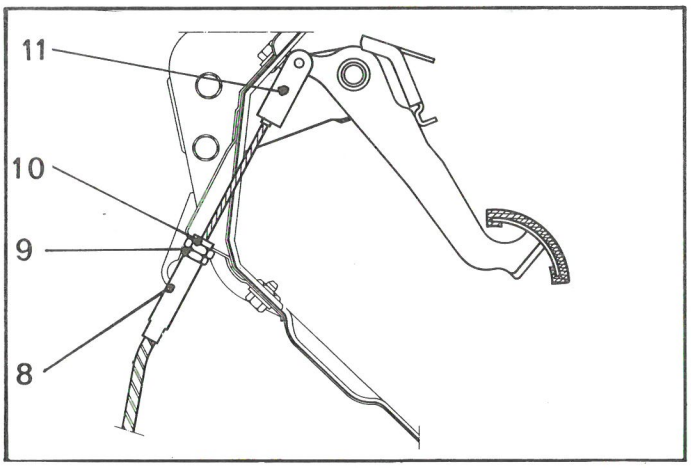

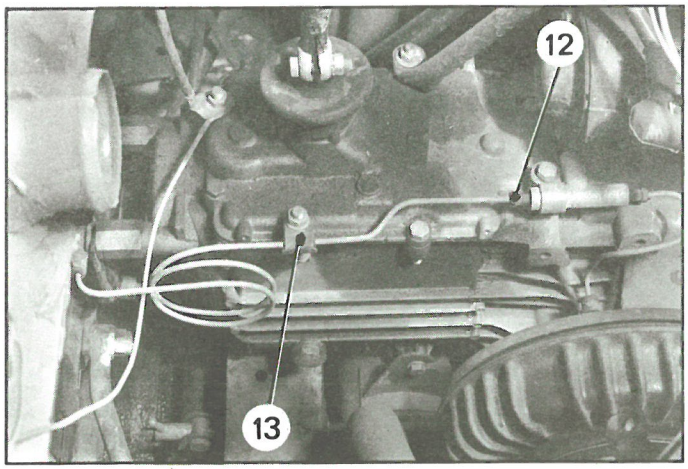

11. Connecting clutch cable :

a) *Vehicles equipped with a non pendent pedal gear :*

Fix the sheath stop to the clutch cable sheath and insert it in boss « a » of gearbox casing Pass cable end-piece in clutch fork

Adjusting the clutch clearance :
Tighten adjusting nut (2) to obtain a clearance between graphite stop and clutch lever stop corresponding to a travel of between 1 and 2mm measured at end of fork.
Tighten lock-nut (1).

b) *Vehicles equipped with pendent pedal gear :*

Connect cable end clevis (11) to clutch pedal.

Adjusting the clutch clearance :
Hold end-piece (8) and operate regulating screw (10) to obtain a clearance at the pedal of between 20 and 25 mm. Tighten lock-nut (9).

12. Connecting brake pipes :

a) *Vehicles equipped with non pendent pedal gear :*

Connect the flexible hose (6) to union (5) of L.H. brake cylinder pipe. (With copper washer on either side of union (5)).
Tighten nut (4) while holding the flexible hose end-piece. (6).

Couple up the connecting pipe (right-hand) (3) to the threaded portion protuding from the nut.

b) *Vehicles equipped with pendent pedal gear :*

Connect union (12) (new sealing-sleeve and fit clip (13).

13. Connect speedometer cable and fit retaining pin or cable fixing screw.

PL. 252

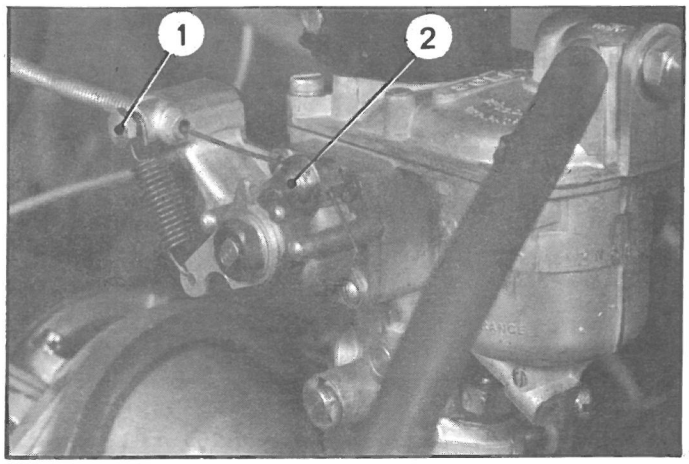

PL. 389

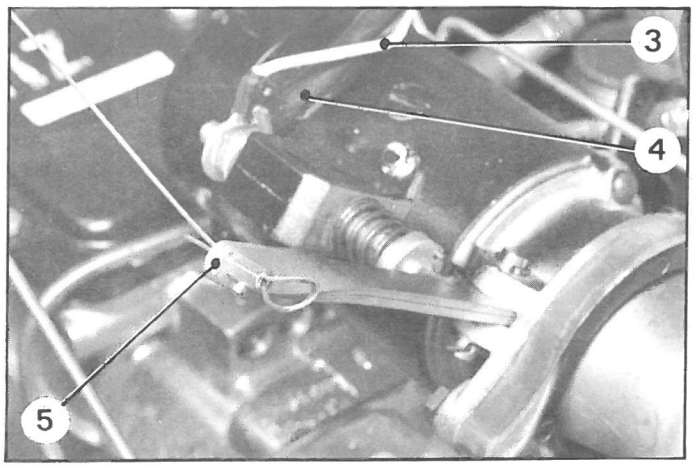

PL. 198

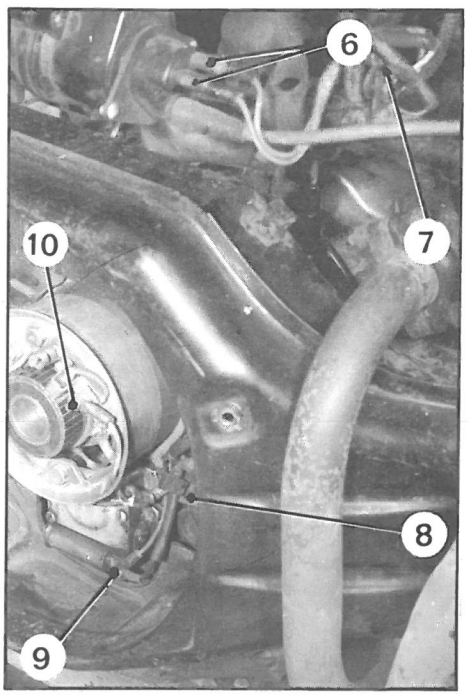

14. Connecting the controls :

a) Connect accelerator link rod to butterfly spindle.

b) Connect choke or choke valve cable to control lever and fit cable guide on cable bracket.
Tighten holding screw moderately (1).
Leave a free play of 3 to 5 mm on the pull button.
Tighten cable screw (2).

c) *Manually controlled starter :*

Connect starter control cable to switch lever (5) so that a cable has no free play but is not under tension. Tighten cable holding nut.

d) Connect gear change lever to selecting fork control lever. There should be no play between shaft and rubber ring ; otherwise, change this ring. **Never grease it.**

15. Fitting the headlamp bracket :

Introduce headlamp operating link rod through scuttle and into bracket on cowling.

Position headlamp bracket on platform sidemembers, tighten fixing screws on sidemembers (use flat and serrated washers).

Fit headlamp operating knob and tighten nut.

16. Making electrical connections :

Position electrical harness.
Connect :
- headlamp bracket earthing lead to crankcase breather fixing screw,
- lead (3) and cable (4) from battery to starter switch,
- horn lead,
- connectors (7) of headlamp leads,
- connectors (6) of coil leads,
- sparking plug leads,
- dynamo or alternator leads (10),
- distributor lead (9) holding it in position by knocking over metal lug (8) of air collector *(if necessary)*.
- oil pressure switch lead, battery earthing lead on gearbox cover or on gear selector bracket *(early models)*.

17. Connect petrol supply pipe to pump or to supply pipe on left-hand sidemember.

10819

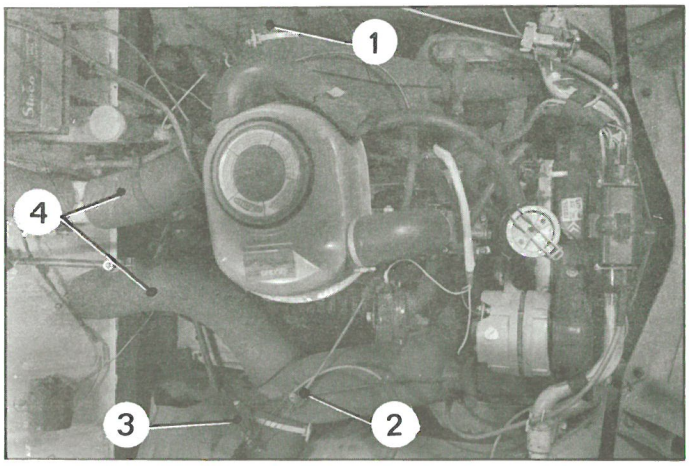

PL. 351

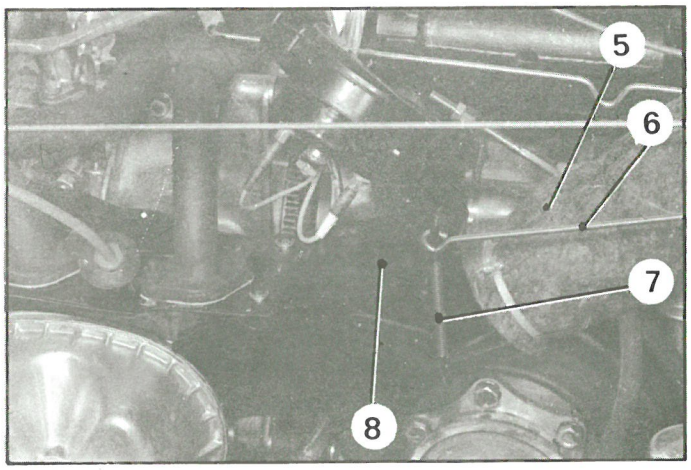

18. **Check static ignition timing** *(if necessary)*

19. Fit :
- fan, tightening fixing screw to 50 mAN (5m.kg) (shakeproof washer)
- fan protection grille,
- bonnet lock.

20. **Adjust handbrake.**

21. **Bleed brake system.**

22. **Check engine and gearbox oil levels.**

23. Connect expansion chamber connecting tube to silencer *(Vehicles with pendent pedal gear).*

24. **Connect heating controls :**

a) *Vehicles with pendent pedal gear :*

Fix heating control links on control side (2) and adjust closing position of shutters (3).
Fit ducts (4) and air exhaust tubes (1).
Fit rubber clips.

b) *Vehicles equipped with non pendent pedal gear :*

Connect control rods (6) to warm air intake shutters (8).

Hook holding spring (7) in eye of rod.

Fit heating ducts (5) and tighten clips.

25. Fit :
- wings, connect direction indicator leads *(if necessary).*
- bonnet side panels,
- bonnet.

26. Connect leads to battery terminals.

27. Start engine, warm up and adjust slow running.

REMOVING AND FITTING AN ENGINE GEARBOX ASSEMBLY
AY Vehicles All Types

4105

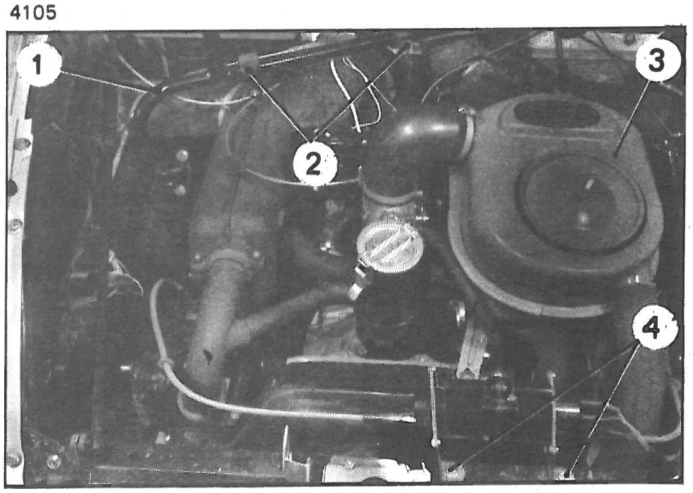

4107

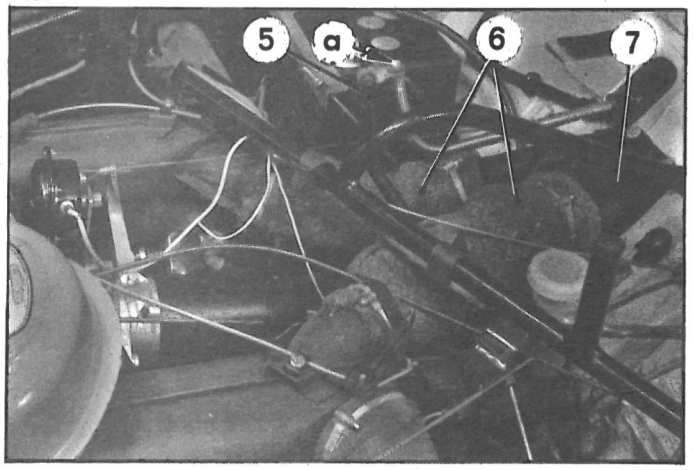

4108

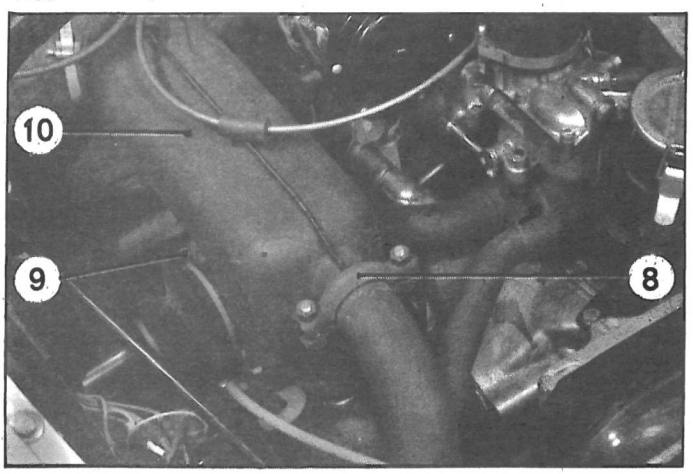

REMOVAL.

1. Hold bonnet open to fullest extent, using a cord (check that bonnet does not touch the windscreen wipers).
AY, CA (Mehari) vehicles : remove bonnet.

2. Remove :
- bonnet stay,
- spare wheel,
- jack,
- battery,
- radiator grille and radiator grille bracket
AY, CA (Mehari) vehicles.

3. Disconnect electrical harnesses :
Disconnect leads :
- from right-hand headlamp,
- from dynamo or alternator,
- from horn,
- from starter (remove positive lead from battery),
- from distributor and from anti-theft device *(on models thus eqquiped)* and free leads from its clip on left-hand wing.

Disconnect earth leads from battery, regulator and upper gearbox cover.
Free harness from its clips on right-hand wing and on spare wheel bracket.

4. Remove :
- coil and its brackets (4),
- air filter (3),
- hose clip (2) and spare wheel support bracket (1) *(as necessary)*,

5. Prepare a plug to block petrol line which is fed from petrol tank :
Cut a length of petrol hose of approximately 50 mm and block one of its end with a 7 mm diameter screw.

6. Disconnect :
- the petrol feed pipe to pump, from supply line on side-member (block this with plug previously prepared),
- accelerator control rod from carburettor (remove rod),
- choke control,
- starter control rod *(as necessary)*,
- linkage lever (5) from fork operating lever at « a ».

7. Remove heating duct from scuttle :
Disconnect heating sleeves (6) from exchangers and remove duct and sleeve assembly (6 and 7).

8. Removal of heat exchangers :
a) Remove :
- clamps (8), on exhaust pipes,
- clamps (9) on expansion chamber,
- clamp securing exhaust pipe on expansion chamber.

b) Unscrew the two expansion chamber fixing screws on gearbox.
c) Free exchangers (10) without disconnecting heating controls. Leave them laying on the scuttle ventilation casing.

Supplement No. 2 to Manual 816-2 (CURR)

4041

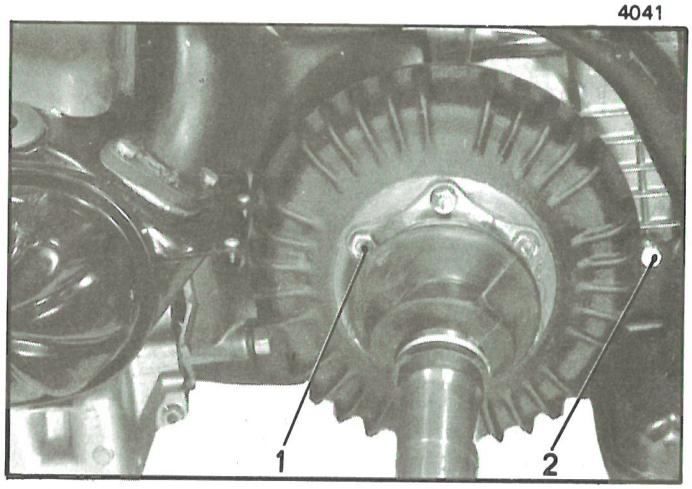

4107

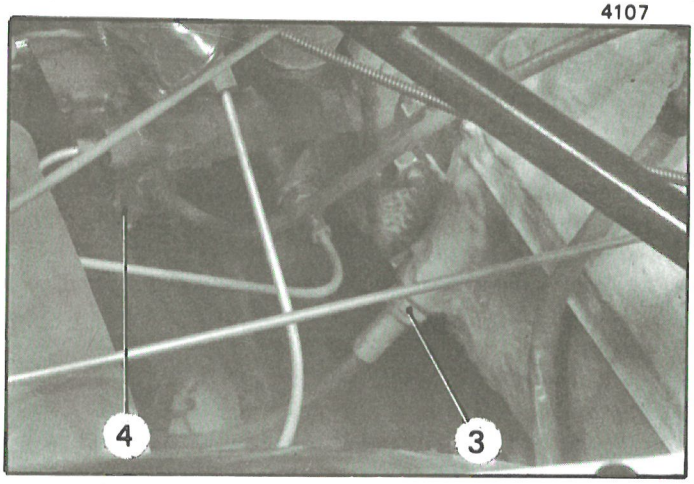

3981

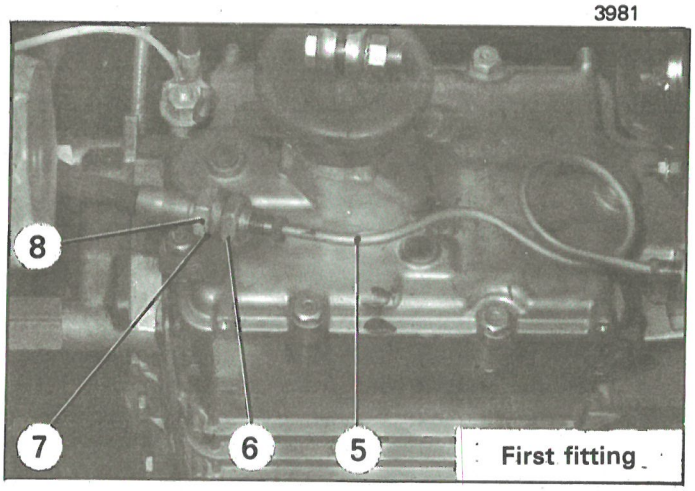

10836

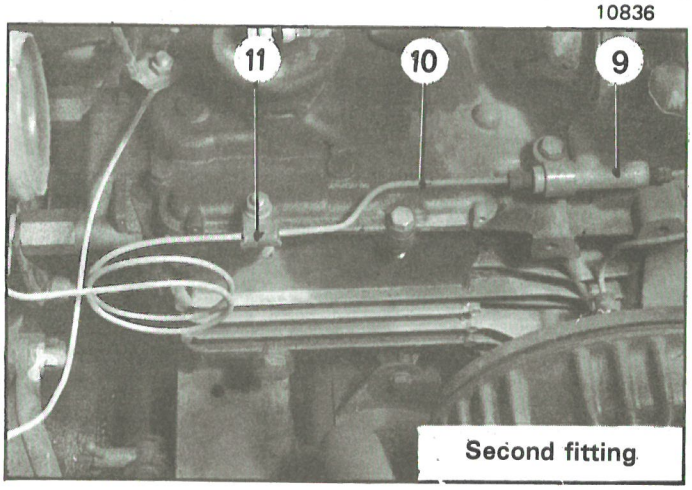

9. Disconnect drive shafts :
Remove fixing screws (1) on differential shafts.
Free drive shafts.

10. Remove expansion chamber *(if necessary) :*
Unscrew fixing screws (2) on gearbox casing and free expansion chamber from under the vehicle.

11. Disconnect clutch cable and speedometer cable :
Unscrew nuts (3) and free clutch cable end piece from clevis of the pedal.
Remove screw (4) and free speedometer cable.

12. Disconnect handbrake cables :
- *Vehicles with drum brakes :*
  Remove handbrake adjusting nuts.
- *Vehicles with disc brakes :*
  Remove the cable adjusting nuts and lock-nuts and free the handbrake levers from the brake units.

13. Disconnect front brake supply pipes :
- *Vehicles with drum brakes :*
  Disconnect connecting pipe (5) from flexible hose end piece (8). Fully unscrew hose securing nut (6) and free the hose, nut (6) and flat washer (7) *(first fitting)* or free holding clip (11) and disconnect pipe (10) from union (9) *(second fitting)*.
- *Vehicles with disc brakes :*
  Disconnect the right brake unit supply pipe and free the mounting clips from the gearbox cover.

14. Remove engine gearbox assembly :
- Remove the two engine securing screws on front crossmember.
- Unscrew gearbox rear securing screws.
- Use chain MR. 630-44/12 or sling 4016-T to raise the assembly.

NOTE : *Vehicles with drum brakes :*
When starting to raise the assembly free handbrake cables from crossmember.

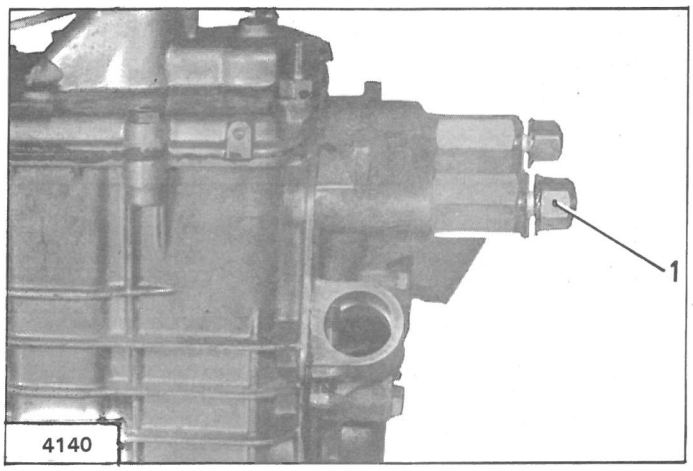

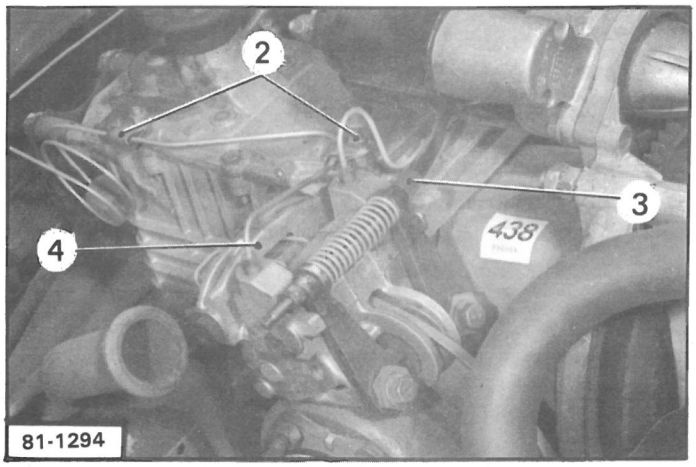

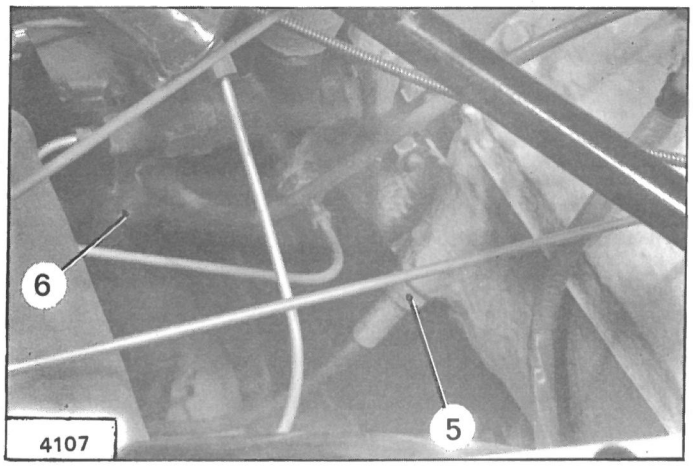

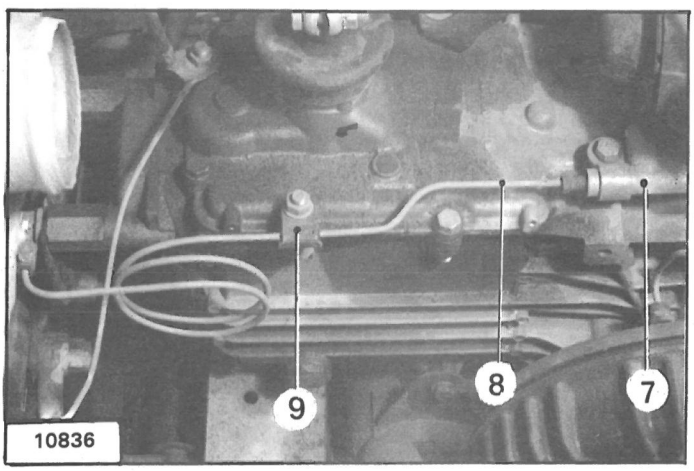

FITTING.

15. Fit engine-gearbox assembly :

a) Position lifting chain MR. 630-44/12 or sling 4016-T on engine-gearbox assembly.

b) *Vehicles with drum brakes :*
Insert handbrake cables into guide on cross-member.
Keep on lowering the assembly and guide the brake cable end-pieces into the barrel of the levers.

c) Position the distance pieces into the bracket on the axle crossmember, with nuts (1) and washers placed behind the bracket.

d) Position the screws securing the front engine mountings but do not tighten (tab washer under screw head).

e) Tighten rear fixing nuts (1).
Tighten front mounting fixing nuts to **6 m.daN**.

f) *Vehicles with drum brakes :*
Tighten with care the adjusting screws of the hand-brake cables.

g) Remove the lifting chain.

h) *Vehicles with disc brakes :*
Insert cables (3) in the levers on the brake units and temporarily tighten the adjusting nuts and lock-nuts.

16. Connect drive shafts :
Tighten fixing screws on differential shaft plate (spring washer) **between 5 and 6 m.daN**.

17. Connect clutch cable :
Insert cable end into the body.
Locate cable end piece in the clevis of the pedal.

18. Adjust clutch clearance :
Tighten adjusting nut (5) in order to obtain a free play between thrust bearing and toggles corresponding to a travel of 20 to 25 mm at the extremity of the pedal.
Tighten lock-nut.

19. Fit speedometer cable :
Insert cable end piece into drive socket on gearbox.
Fit and tighten screw (6).

20. Connect brake pipes :

a) *Vehicles with drum brakes :*
Couple up connecting pipe to flexible hose or pipe (8) to union (7) (new sealing sleeve) and fit clip (9).
Position without tightening union screw of connecting pipe (8) (fit new sealing sleeve).

b) *Vehicles with disc brakes :*
Couple pipe (4) to right brake unit and fit mounting clips (2).

c) Tighten the union bolt between 0.5 and 0.7 m.daN

Supplement No. 2 to Manual 816-2 (CORR)

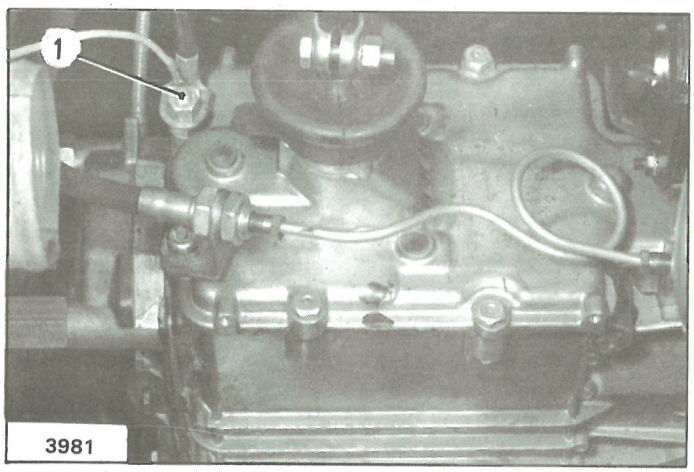

21. Connect the gear control :
Couple the connecting rod to the gear control lever on dashboard.

22. Connect battery earth lead and regulator earth lead to extended head screw (1) on upper cover of gearbox.

23. Fit carburettor controls :
a) Connect accelerator control rod to pedal and to butterfly spindle lever, (felt washer).
b) Fit choke cable in strangler flap lever.
Insert sleeve in bracket and moderately tighten stop screw.
Adjust control by leaving a distance of 1 to 2 mm.
Moderately tighten cable stop screw.

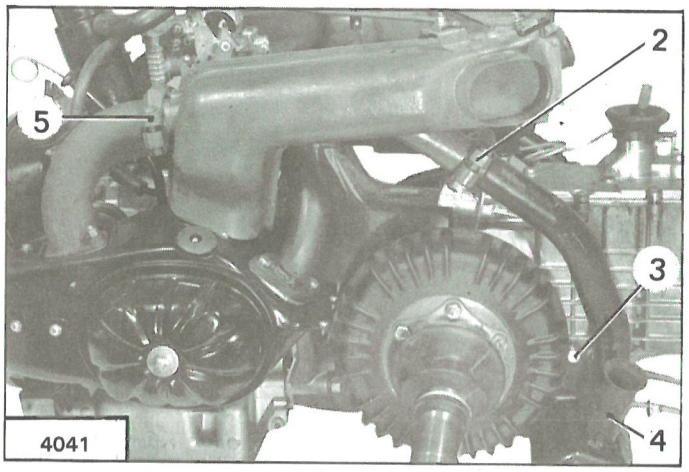

24. Fit expansion chamber :
Insert from underneath the vehicle. Do not tighten finally fixing screws (3) on gearbox.

25. Fit heat exchangers :
Fit exhaust ducts (8) in wheel arches and position exchangers on cylinder head upper cooling plates.
Position without finally tightening :
- fixing clamps (5) on manifold,
- fixing clamps (2) on expansion chamber.

Connect outlet end piece (4) of expansion chamber to exhaust pipe.
Finally tighten the five fixing clamps and the two screws (3).

26. Adjust handbrake :
(See Operation A. 454-0 of Manual 816-1).

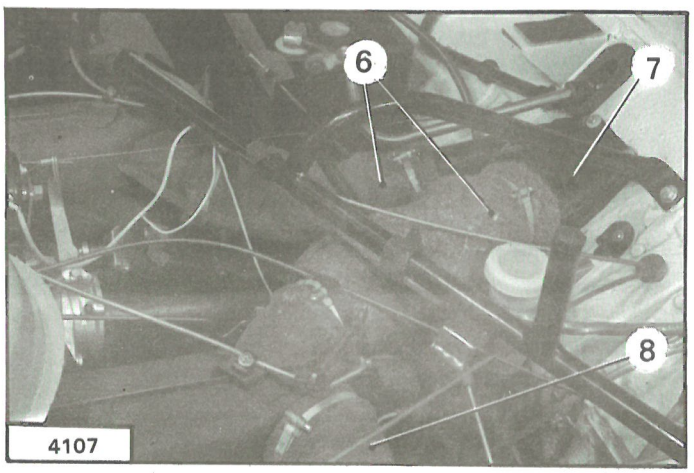

27. Bleed brake piping :
(See Operation A. 451-0 of Manual 816-1).

28. Fit heating duct :
Position duct (7) and heating sleeves (6) assembly.
Tighten fixing screws on scuttle (contact washer).
Connect the heating sleeves (6) to exchangers.

29. Fit spare wheel bracket (1) :

Tighten fixing screw on scuttle and platform (contact washer).
Position electrical harness and headlamp control cable clips (2).

30. Connect starter control *(depending on model)* :

Connect cable to switch lever.
Adjust without excess tension or slack.

31. Connect petrol feed hose to reservoir pipe.

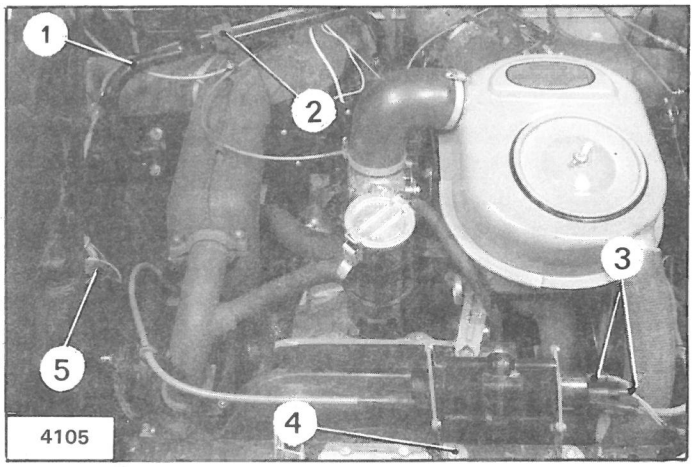

32. Fit coil and its brackets (3).

33. Fit front grille and its bracket.
(AY, CA Mehari vehicles)

34. Connect electrical harnesses :
Connect :
- battery lead and positive cable to starter contact switch (cap),
- horn lead,
- supply leads (5) to right-hand headlamp,
- alternator leads,
- coil leads (4),
- sparking plug leads,
- supply leads to distributor and dynamo *(on models thus equipped).*

35. Check oil levels in engine and gearbox :

NOTE : Overfilling or incorrect grade of oil could have a detrimental effect on the gearbox operation.

36. Fit battery. Connect positive and negative leads.

37. Fit air filter.

38. Start engine. Allow it to warm up. Check the operation of the gears and gas tightness of exhaust joints.

39. Check oil pressure if necessary.

40. Adjust idling speed.

41. Fit bonnet stay. Check correct locking of bonnet and operation of the catch.

42. Fit bonnet *(AY, CA Mehari vehicles).*

43. Fit jack and spare wheel.

Supplement No. 2 to Manual 816-2 (CORR)

REMOVING AND FITTING AN ENGINE-GEARBOX UNIT.

5138

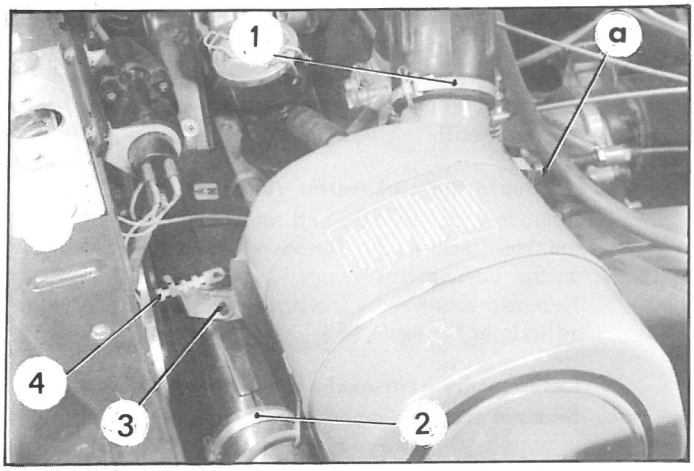

5311

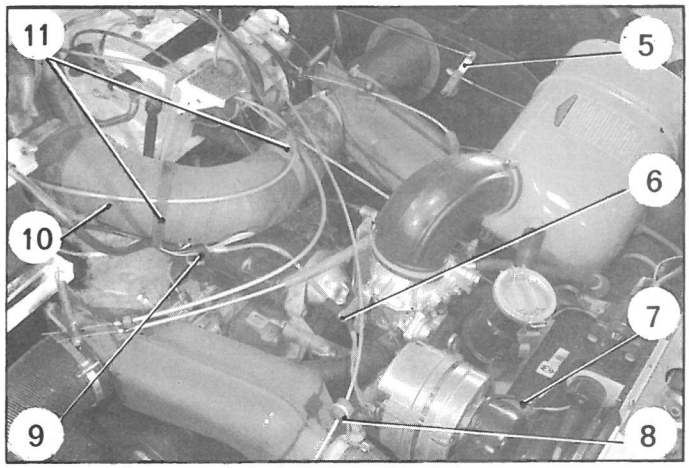

5141

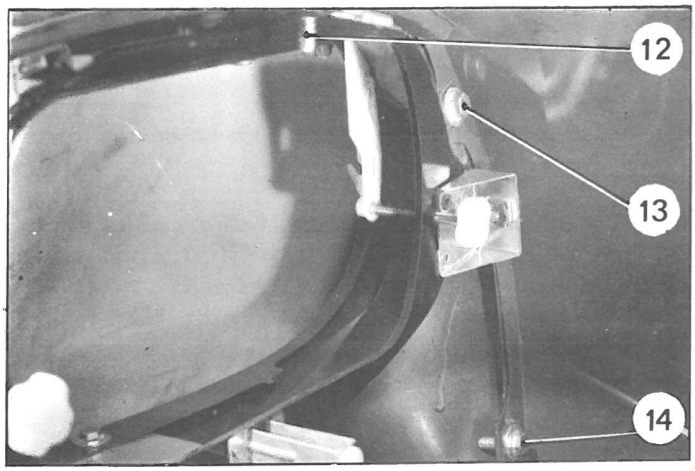

5140

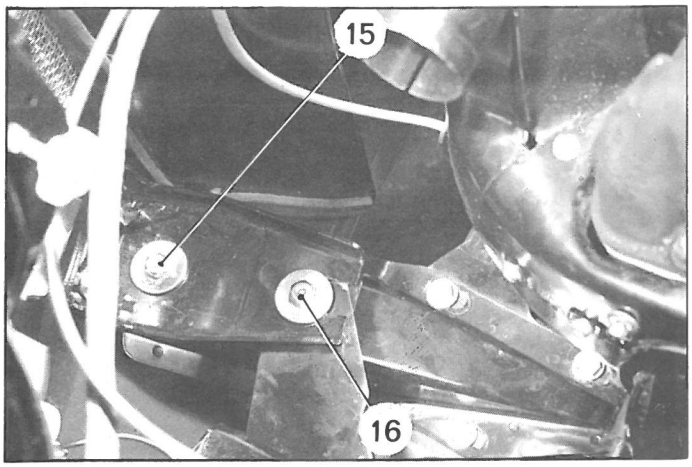

REMOVAL.

1. Disconnect the cable from the negative terminal of the battery.

2. Raise the bonnet to its full extent, without touching the upper scuttle panel, and secure it in position using a string.
Remove the stay and the spare wheel.

3. Remove the return spring and its tightener (4) from the accelerator (identify the securing position).

4. **Remove the air intake silencer** (if necessary) :
Remove nut (3).
Slacken :
- the nut of the lower bracket on the air intake collector,
- the nut of rear mounting bracket (at « a »),
- clamps (1) and (2).

Disconnect the lead from the L.H. side sparking plug.
Release the silencer.

5. **Disconnect the wiring harnesses :**
Pull out the connectors from the headlamps.
Disconnect the feed wires (and earth wires), from the direction indicators, the side and tail lamps, the horn, the ignition coil and the distributor.
Disconnect the lead from the R.H. side sparking plug (at coil end).
Disconnect the earth wire from bolt (7) securing the ventilation half-housing.
Free the harness from its brackets on the valance. Let it rest on the L.H. side wheelarch.
Uncouple the feed wires from starter terminals (9).
Disconnect the wires from the alternator or the dynamo and release them from their brackets (6).
Remove clamps (11). Release heater flexible pipe (10) from the L.H. side heat-exchanger.

6. **Disconnect the headlamp flexible hoses from the control on the scuttle shelf :**
In the passenger compartment (under the shelf of the scuttle panel), slacken the control button to a maximum and release the ends of the leads.
Under the bonnet, release the flexible hoses from the scuttle panel and securing bracket (8). Let them rest on the valance.

7. **Disconnect the flexible hose controlling bonnet unlocking :**
Remove the stop pin of return lever spindle (5).
Release the lever and uncouple it from the control rod.

8. **Remove the front valance :**
On each side :
- Remove bolts (12), (13) and (14) securing the front wing,
- Remove bolt (15) and slacken bolt (16) of the mounting brackets securing the valance on the front sidemember.

5118

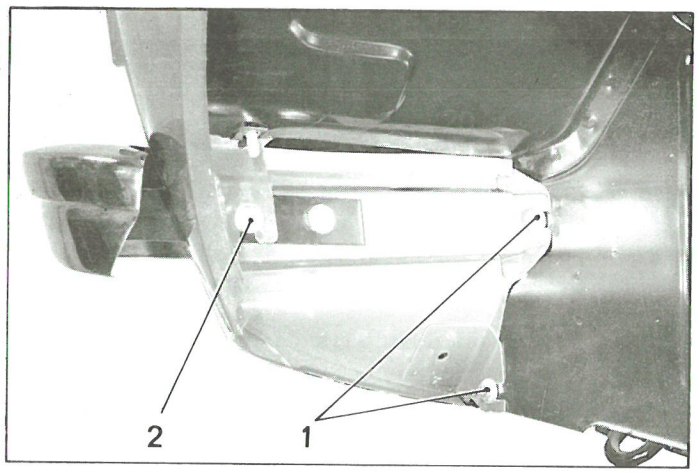

- Remove bolt (2) and slacken the two securing bolts (1) on the wheelarch.

Release both the valance and the bumpers.

9. **Uncouple the carburettor controls :**
Remove stop pin (8) and spindle (7). Release tension limiter (6). Remove the rear fixing nuts on the carburettor.
Release bracket (4), without uncoupling it from adjustment sleeve (5).

10. **Release the heat-exchangers** (if necessary) :
Remove fixing clamps (17) on pipes and fixing clamps (10) on expansion chamber.
On the L.H. side, remove protective shield (11). *(Vehicles fitted with disc brakes only).*
Uncouple the heater flexible pipe from the R.H. side exchanger.
Remove the exchangers. Put them on the scuttle and the L.H. side wheelarch. (Uncouple neither the exhaust pipes nor the control flexible hoses).

5139

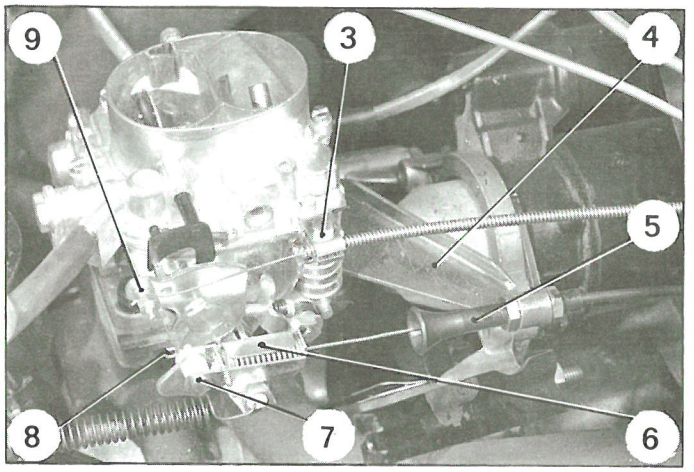

11. Remove clamp (15) and uncouple the expansion chamber from tube (14) for connection to the exhaust silencer.

12. **Uncouple the clutch cable :**
Slacken nuts (13) and release the cable end piece from the pedal.

13. **Uncouple the speedometer cable :**
Remove the stop screw and release flexible hose (12).

14. Remove bolts (16) securing the drive shafts, and release them (if necessary).

15. Uncouple the petrol inlet hose connected to the pump, from the pipe on the sidemember.
Plug the pipe using a 50 mm piece of hose, whose extremity must be plugged with a screw of 7 mm dia.

16. On the upper cover of the gearbox, uncouple :
- the earth cable (26),
- the coupling lever from the lever controlling the forks.

Remove bolt (25).

5314

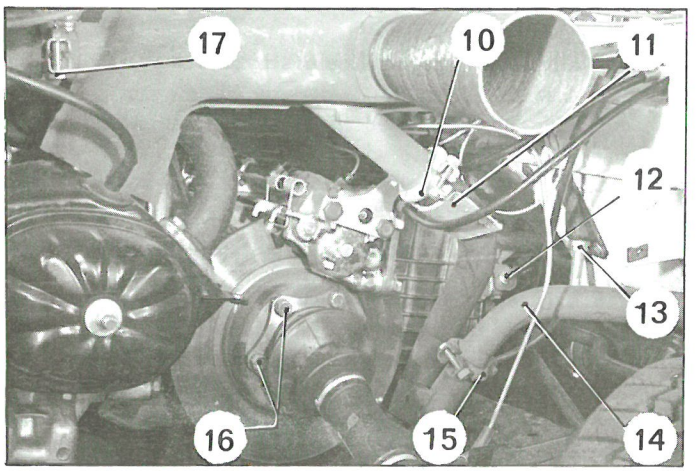

17. **Uncouple the brake control cables :**
(Vehicles fitted with disc brakes).

a) Release the handbrake cable :
- Remove spindle (18).
- Remove spindle (21).
- Release return lever (19).
- Remove spindle (20) (at scuttle shelf end) and roller (23).
- Release cables (24).

4995

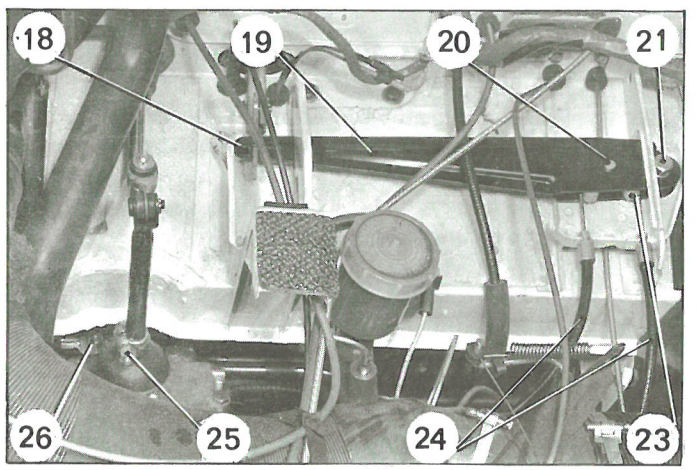

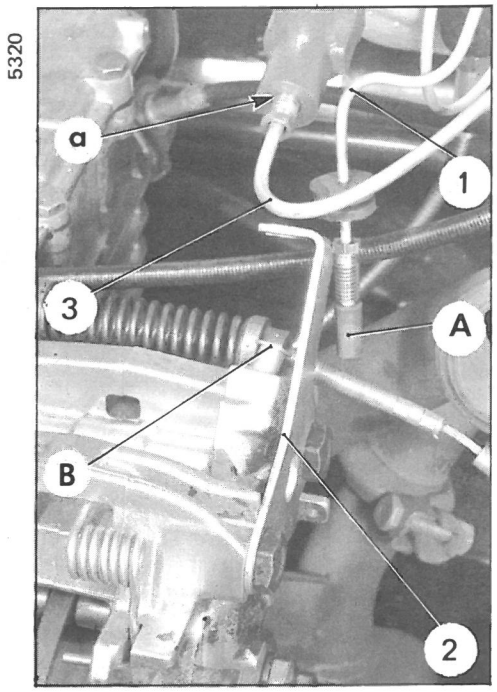

b) Uncouple :
- tube (1), from the L.H. side brake unit and release it from the bracket (2),
- tube (3) from the master-cylinder.

Blank tube (1) using plug (A) as well as orifice « a » of the master-cylinder.

Also blank the supply orifice for brake unit using plug (B).

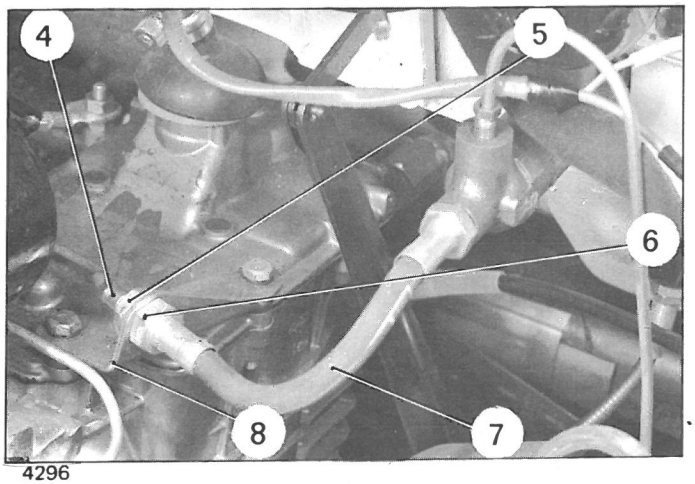

17 A. Uncouple the brake control cables :
(Vehicles fitted with drum brakes).

- Slacken union-screw (4).
- Slacken locknut (5) holding end-piece (6) so as to avoid twisting flexible hose (7).
- Release the flexible hose from bracket (8).
- Remove the nuts adjusting the handbrake cables.

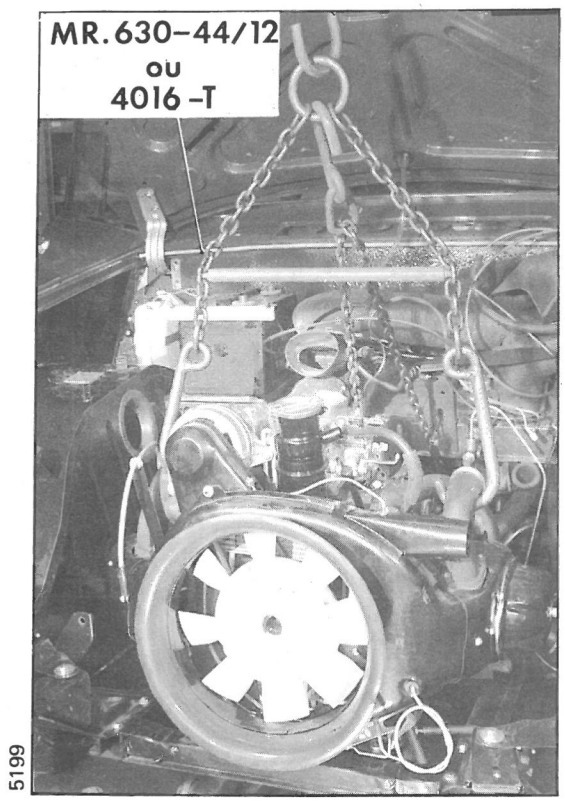

18. Remove the engine-gearbox unit :

Release the carpet, at the R.H. side of the accelerator pedal and remove the rubber plugs blanking the access holes to the rear fixing nuts on the gearbox.
Slacken the nuts.
Bend back the lock plates and remove the bolts fixing the flexible mountings on the front cross-member.
Bring up the lifting apparatus fitted with the sling brackets MR. 630-44/12 or 4016-T (arrange the slings as shown on the figure).
Raise the engine-gearbox unit high enough so as to release the rear fixing of the bracket and to enable the crankcase to pass above the front crossmember.
Pull the engine-gearbox unit forward in order to release the handbrake cables from their pipes in the crossmember.
(Vehicles fitted with drum brakes only).
Keep raising the engine-gearbox unit so as to release the unit from the vehicle.
Put the unit on a bench and release the slings.

5145

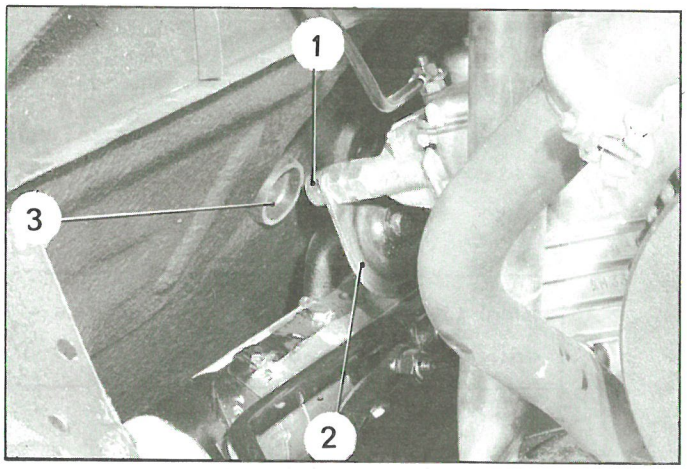

5316

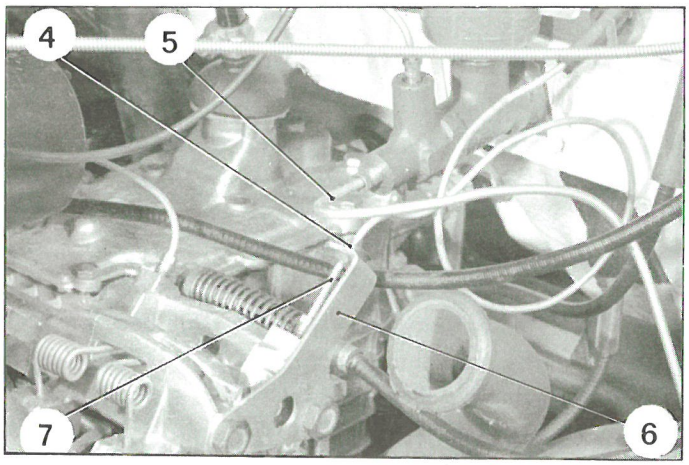

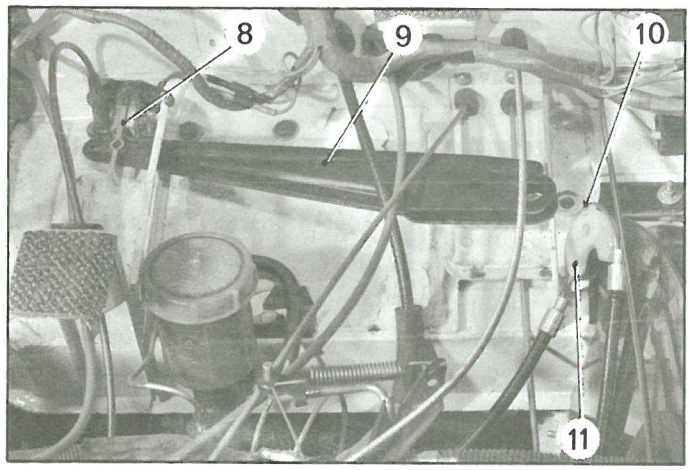

4992

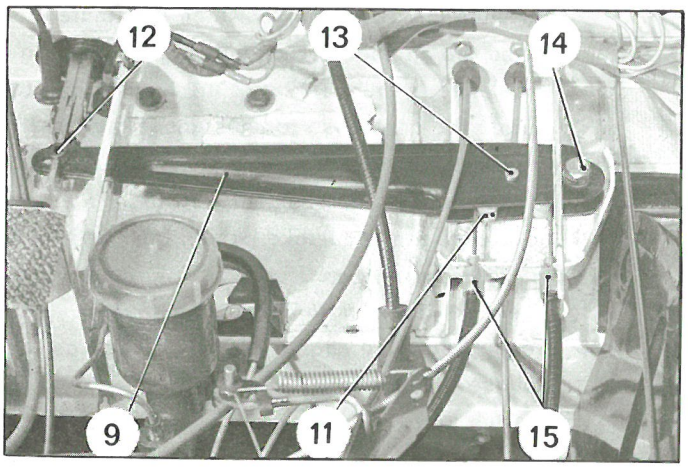

4993

FITTING.

19. Position the sling brackets and bring up the engine-gearbox unit over the vehicle.

20. **Fitting the engine-gearbox unit :**
Lower the unit, while inserting :
- the handbrake cables in the pipes of the cross member *(Vehicles fitted with drum brakes only).*
- the rear fixing studs in the mounting slots of rear bracket (2). (Place the washers behind the bracket).

Introduce the sliding jaws in the drive-shafts (if necessary)
Keep lowering the unit, while inserting the handbrake cable end-pieces in the pins of the compensator levers *(Vehicles fitted with drum brakes only).*
Fit the screws securing the front flexible mountings (lock plate under screwhead).

21. Remove the sling brackets :
Fully tighten :
- front securing screws, bend back the lock plates,
- rear fixing nuts (1) (flat and serrated washers).

Fit plugs (3)

22. **Couple the brake control cables :**
(Vehicles fitted with disc brakes)

a) Couple feed pipe (7) with the L.H. side brake unit :
- fit a new sleeve-seal.
- insert the tube in bracket (6).
- tighten the union-screw by hand.
- fit rubber (4) in bracket (6).
- tighten the union-screw from **0.8 to 0.9 m.daN (5.9 to 6.6 ft. lbs).**

b) Couple tube (5) to the master-cylinder :
- fit a new sleeve-seal.
- tighten the union-screw by hand, from **0.8 to 0.9 m.daN (5.9 to 6.6 ft. lbs).**

Each time an operation is carried out, the sleeve-seals must be replaced.
Only use the sleeve-seals identified by a green-paint mark.

c) Connect the handbrake cable :
- insert cable (10) fitted with roller (11) in return lever (9). Place spindle (13) (with spindle head at scuttle panel end).
- insert the end of the return lever in link rod (8). Fit spindle (12). Fit a pin.
- fit spindle (14) Tighten the screw (serrated washer)
- fit sheath stops (15) in their fixing notches.

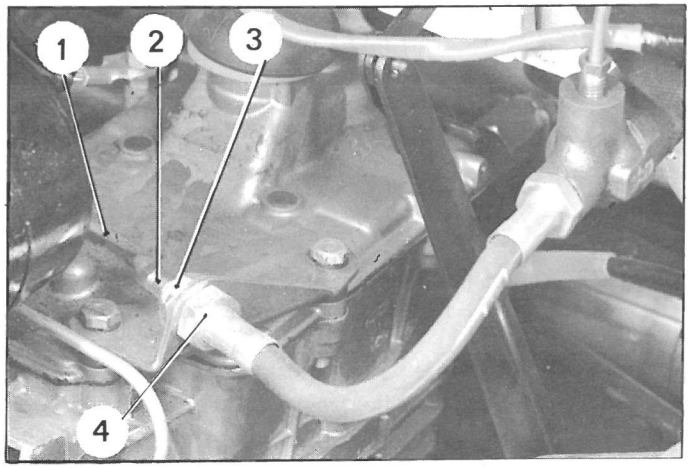

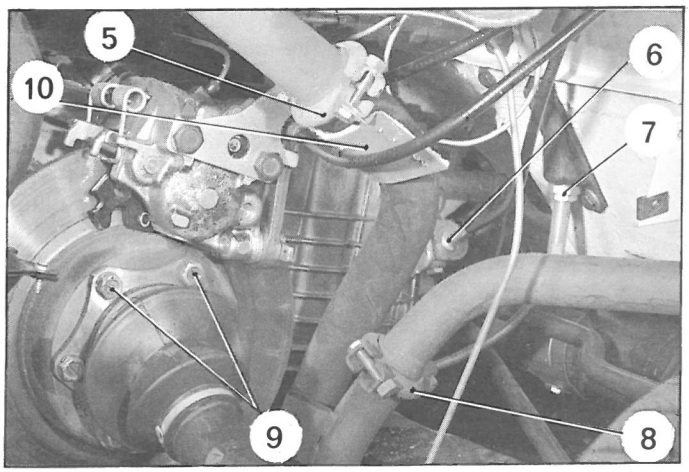

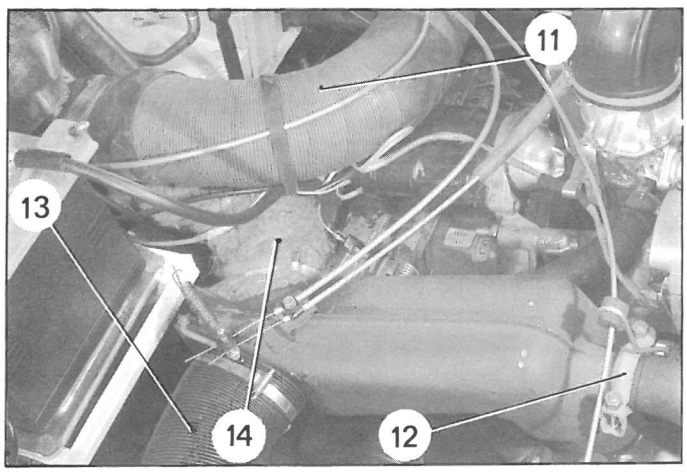

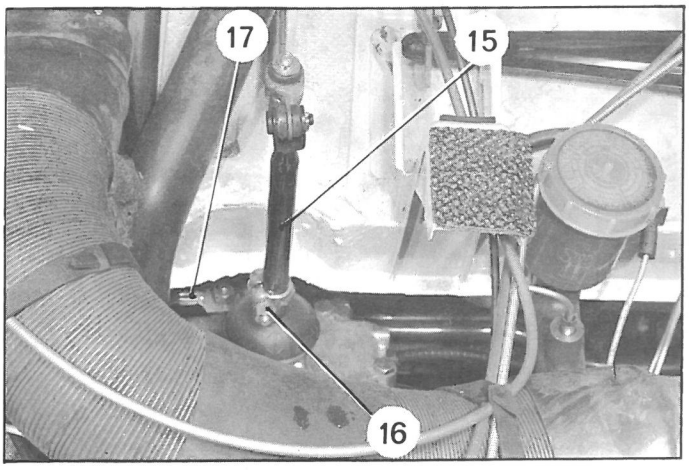

22 A. **Connect the brake control cables :**
(Vehicles fitted with drum brakes).
Slightly tighten the adjustment nuts of the handbrake cables.
Fit nut (3) and plain washer on junction pipe (1).
Insert end-piece (4) of the flexible hose in the bracket and couple it to the junction pipe.
NOTE : *At each time an operation is carried out replace the sleeve-seal.*

Only use the sleeve-seals identified by a red paint mark.

Tighten nut (3) holding end piece (4) so as to avoid twisting the flexible hose.
Tighten union-screw (2) from **0.8 to 0.9 m.daN (5.9 to 6.6 ft. lbs).**

23. **Connect the drive-shafts :**
Tighten securing screws (9) (spring washers) from **4.5 to 5 m.daN (33.15 to 36.85 ft. lbs).**

24. **Connect the speedometer cable :**
Insert end (6) of the flexible hose in the gearbox drive socket. Tighten the stop screw.

25. **Connect the clutch cable :**
Insert the cable end in the scuttle panel and couple it to the pedal.

26. **Adjust the clutch clearance :**
Screw the adjustment end piece so as to obtain a clearance from 20 to 25 mm at the end of the pedal.
Tighten nuts (7).

27. **Fit the heat-exchangers** (if necessary) :
Insert exhaust pipes (13), in the wheelarches, and fit the heat exchangers on the air intake collectors of the cylinder heads.
Fit securing clamps (5) and (12) on the pipes and the expansion chamber.
On vehicles fitted with disc brakes :
On the L.H. side, place protective shield (10) under the securing screws of clamp (5).
Fit clamp (8) securing the junction pipe on the expansion chamber.
Tighten the screws (with serrated washer under the nuts).
Check the correct tightening of the screws securing the expansion chamber on the gearbox housing.
Couple flexible hose (14) with the R.H. side exchanger and flexible hose (11) with the L.H. side exchanger.

28. Couple the hose supplying the fuel pump with the pipe on the L.H. sidemember.

29. **Couple the linkage rod with the lever controlling the forks :**
Choose the correct position of lever (15) grooves which enable the securing screw to be fitted.
Tighten nut (16) moderately (serrated washer).

30. Couple earth cable (17) of the battery with the extended head screw of the gearbox upper cover.

5141

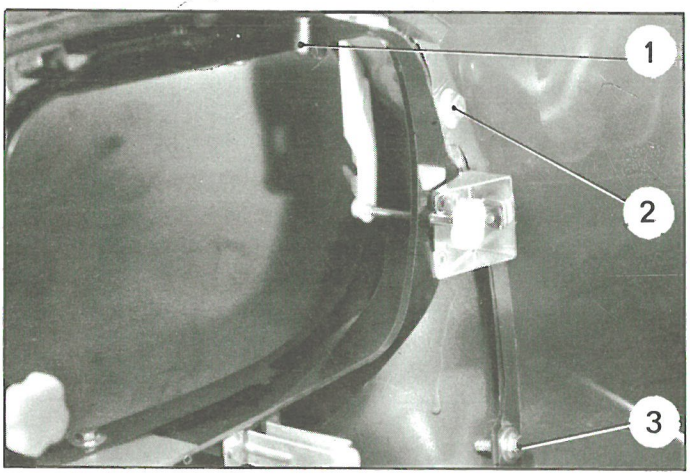

5140

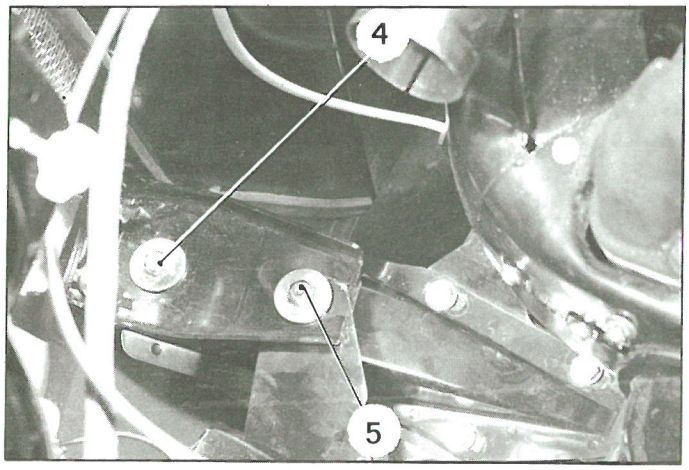

5118

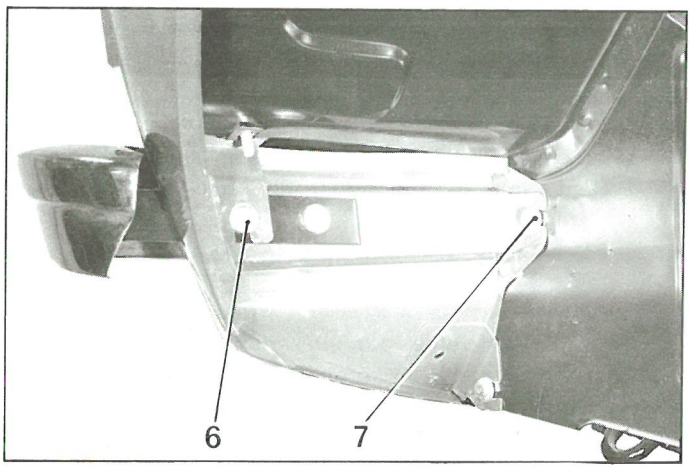

5143

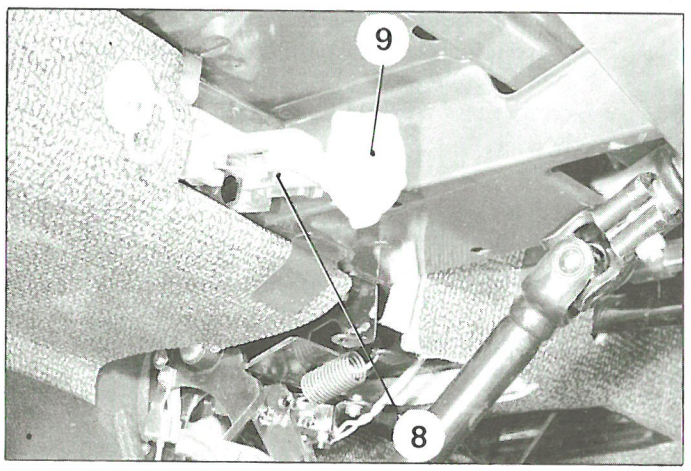

31. **Bleed the brake pipes :**
(See the relevant operation).

> **The green fluid used for vehicles equipped with disc brakes is different from the fluid used for vehicles equipped with drum brakes.**

32. **Adjust the handbrake :**
(See the relevant operation).

33. **Fit the front valance :**
Bring up both the front valance and the bumpers.
On each side, and without fully tightening them, fit :
- securing bolts (1), (2) and (3) on the front wing,
- bolt (14) securing the mounting brackets of the valance on the front sidemember.

Adjust the position of the valance so as to obtain the alignment with the two wings, and to enable the bonnet to be correctly opened or closed.
Fully tighten the securing bolts mentioned here above as well as bolts (5), (6) and (7).

34. **Couple the headlamp cables with the control on the scuttle shelf :**
Fit the two cables with the R.H. side cable fitted on securing lug (11).
Insert the ends of the cables in the holes provided in the scuttle (protective rubbers).
In the passenger compartment (under the scuttle shelf) slacken button (9) to a maximum and insert the cable pins in the notches of control (8).

35. **Connect the cable controlling the bonnet unlocking :**
Couple return lever (10) with the control rod.
Fit the lever on its fixing pin.
Fit the stop pin.
Check the correct functioning of the control and adjust it, if necessary.

5130

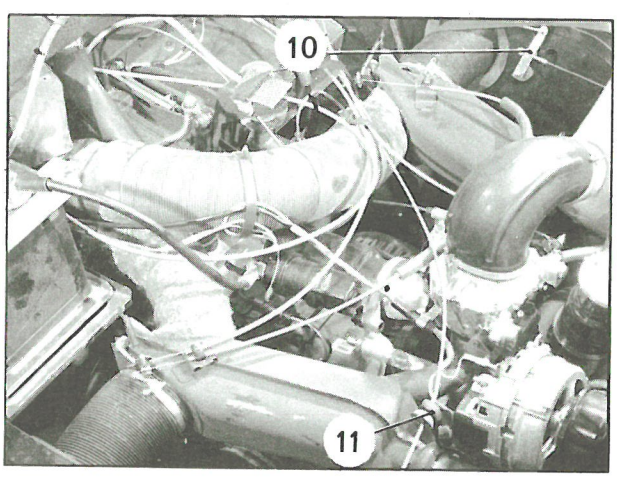

5139

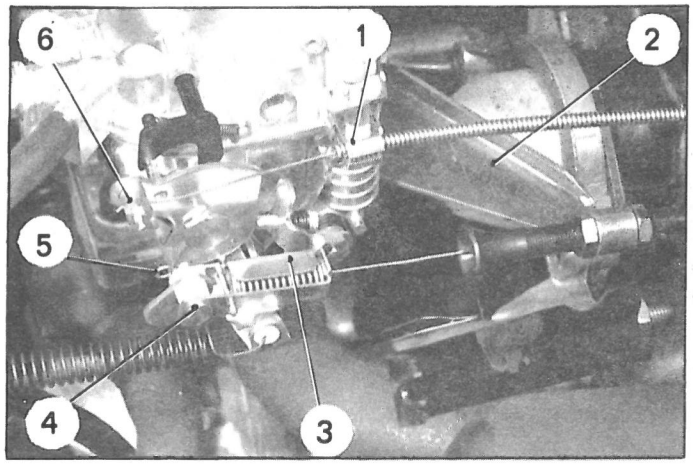

5311

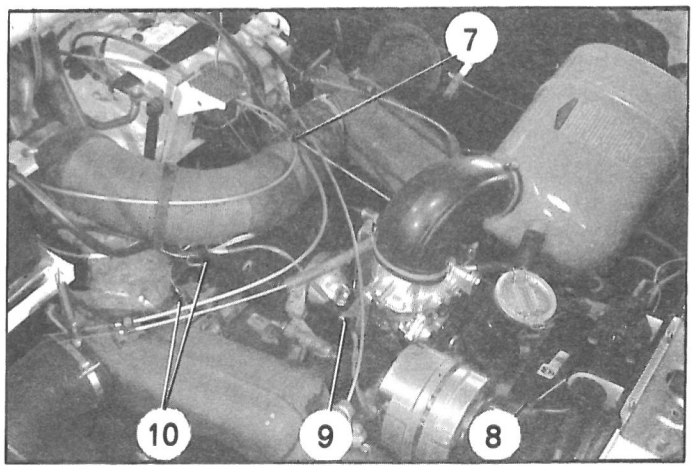

5138

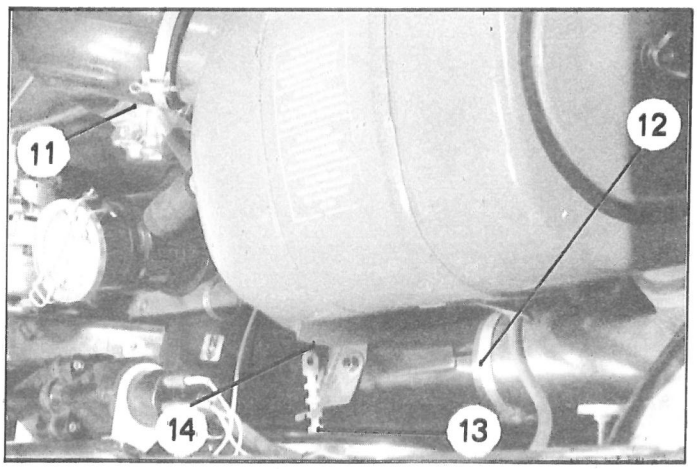

36. Couple the control cables of the carburettor :
Fit cable-sleeve bracket (2). Tighten the two fixing nuts at the rear of the carburettor (spring washer).
Couple tension limiter (3) with the throttle control lever : fit spindle (4) and stop pin (5).
Insert the choke cable in the control lever and the sleeve in the bracket. Slightly tighten bolts (1) and (6), keeping a 3 to 5 mm clearance at the link rod, so as to obtain a correct opening of the choke flap.

37. Connect the wiring harnesses :
Connect the connectors to the headlamp bulbs.
Connect the leads of the harness to the direction indicators, the side and tail lamps, the horn and the coil.
Connect the lead of the R.H. side sparking plug and of the distributor to the coil.
Couple the earth lead with bolt (8) fixing the upper part of the ventilation half-housing.
Fit the harness on the valance, using the securing clamps.
Connect the leads to the starter terminals (10). (rubber protectors).
Connect the leads to the alternator or the dynamo terminals. Fit them in lug (9) on the carburettor.
Hold the flexible hoses when fitting rubber clamp (7).

38. Fit the air intake silencer or the air filter :
Fit the silencer by inserting the flexible unions in the air collector and the breather, and in the carburettor.
Fit the securing lugs. Tighten the nuts (lugged contact washers).
Tighten clamps (11) and (12) securing the flexible unions.
Fit return spring (14) and its tightener (13) of the accelerator (position identified at the time of the removal).
Connect the lead of the L.H. side sparking plug.

39. Connect the earth cable to the negative terminal of the battery.

40. Start the engine. Let it warm up.
Check :
- the gear selection,
- the correct sealing of the exhaust unions,
- the operation of the heat control.

41. Adjust the idling speed of the engine (750 to 800 rpm).

42. Check and if necessary, adjust *(see the relevant operations)* :
- the ignition timing,
- the oil pressure,
- the headlamps.

43. Check the oil levels.

44. Position the spare wheel.

REMOVING AND FITTING AN ENGINE-GEARBOX UNIT
AZ Vehicles with front disc brakes

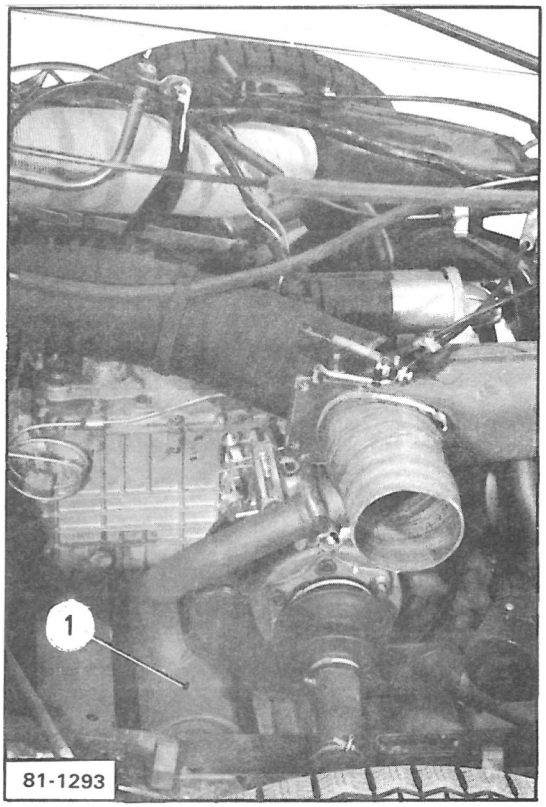

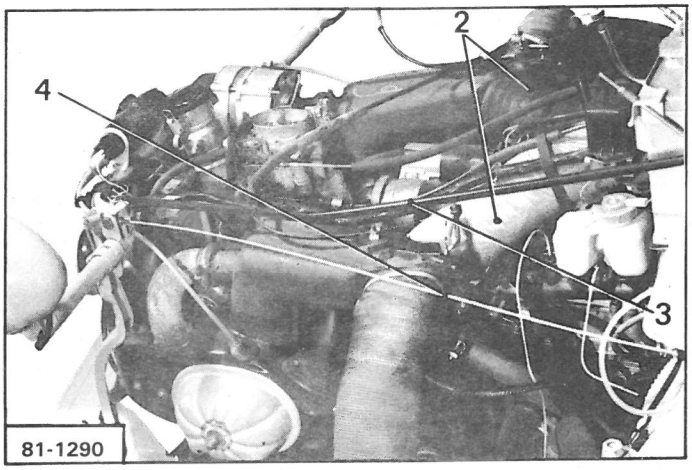

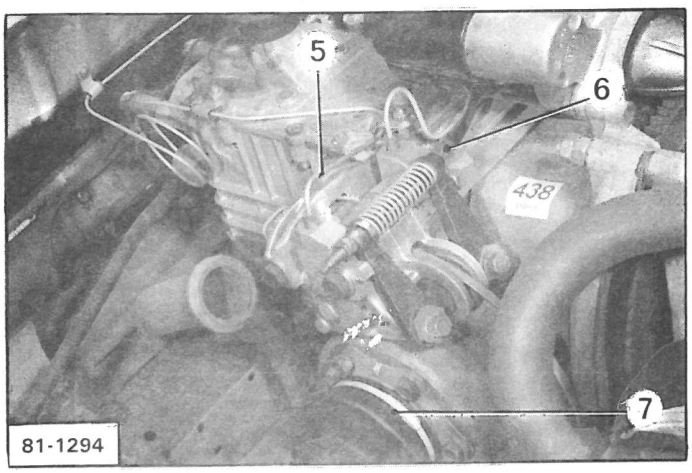

REMOVAL.

1. **Remove the bonnet :**

2. Disconnect the battery cables, the direction indicator supply and earth wires.

3. **Remove :**
   - the side valances,
   - the front wings,
   - the air filter.

4. **Disconnect** the electric harness from :
   - the headlamps,
   - the horn,
   - the ignition coil,
   - the contact breaker,
   - the alternator,
   - the starter motor,

   and free it from the rubber clips.

5. **Disconnect :**
   - the sparking plug wires,
   - the fuel inlet pipe from the piping on the sidemember *(plugs)*.

6. **Remove :**
   - the headlamp height adjustment knob,
   - the headlamp supporting rod with bonnet stay (3) and headlamp height control rod (4),
   - heating sleeves (2).

7. **Untighten** the screws securing expansion chamber (1) on the gearbox and pull out the expansion chamber.

8. **Remove** the heating exchangers without disconnecting the controls.

9. **Disconnect :**
   - the starter cable,
   - the accelerator cable,
   - handbrake cables (6),
   - the gear control,
   - brake supply pipe (5) from the left brake unit and from the gearbox cover,
   - the clutch cable from the pedal,
   - the speedometer cable,
   - the earth cable from the gearbox cover,
   - drive shafts (7) from the differential shafts.

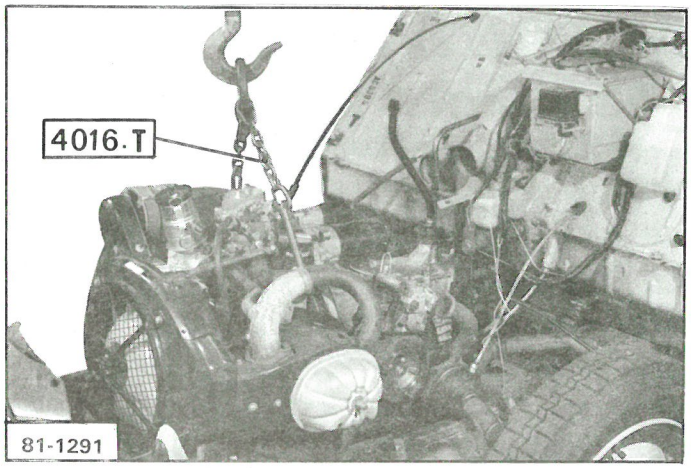

10. **Unlock and remove** the securing screws for the engine front elastic mountings.

11. **Unlock and untighten** securing screws (4) for the gearbox rear elastic mounting.

12. **Remove** the engine-gearbox unit, using **sling 4016-T.**

FITING.

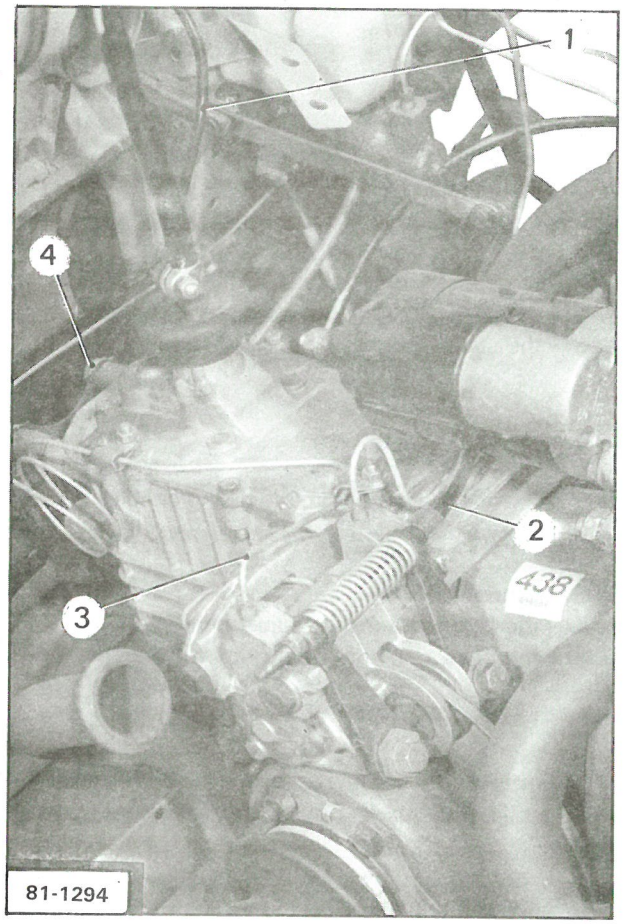

13. **Fit** the engine-gearbox unit using **sling 4016-T.**
Lower the unit while guiding screws (4) in the cross-member support.
Tighten and lock screws (4).
Tighten and lock the front support screws.

14. **Couple :**
- the drive shafts,
- earth cable (1) on the gearbox cover,
- speedometer cable (5),
- the clutch cable *(adjust the clearance at the end of the pedal between 20 and 25 mm),*
- brake supply pipe (3) to the left brake unit and to the gearbox cover *(bleed the front brakes),*
- the gear control,
- handbrake cables (2),
- the choke cable,
- the accelerator cable.

15. Place the expansion chamber on the securing screws on the gearbox.

16. **Fit** the heating exchangers.

17. **Tighten** the screws securing the expansion chamber to the gearbox.

18. **Fit :**
- the heating sleeves,
- the headlamp supporting rod while positioning direction indicator wires (7) and engaging headlamp height adjustment rod (6) in the scuttle and in the lug under the dashboard,
- the headlamp height adjustment knob.

19. **Connect** fuel inlet pipe (8) with the piping on the sidemember.

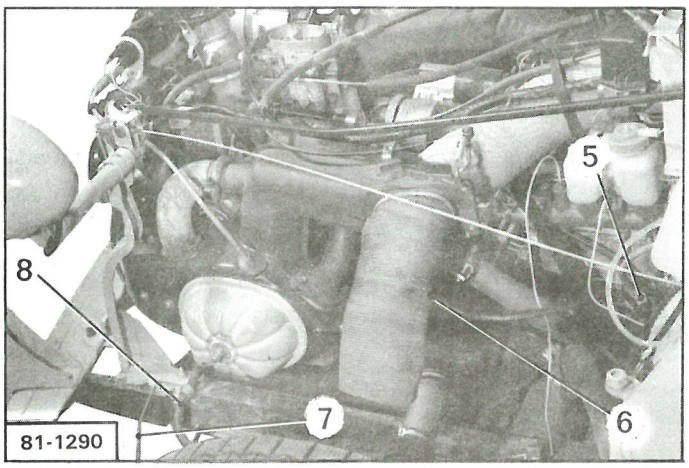

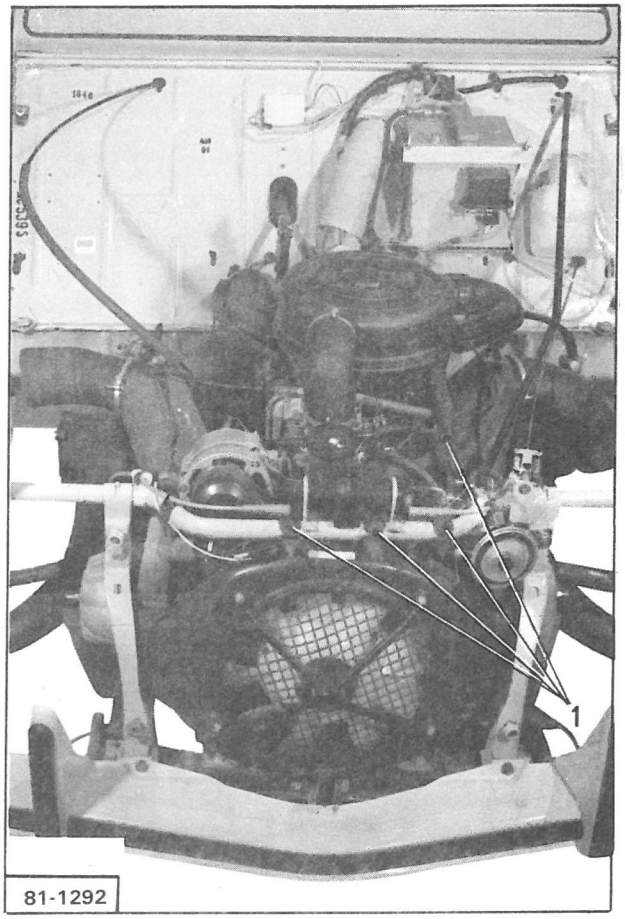

20. Connect :
- the battery wires.

21. Connect the electric harness to :
- the starter motor,
- the alternator,
- the contact breaker,
- the ignition coil,
- the horn,
- the headlamps,
- the battery.

Secure the harness with rubber clips (1).

22. Fit the air filter.

23. Start the engine and let it heat up.
Make sure the gears engage correctly.
Check the tightness of the exhaust connections.
Adjust idling speed, if necessary.

24. Fit :
- the front wings,
- the side valances,
- the bonnet.

25. Connect :
- the earth cables to the direction indicators,
- the direction indicator supply wires,
- the windscreen washer pipe to the spray nozzle.

Supplement No. 2 to Manual 816-2 (ADD)

REMOVAL AND FITTING AN ENGINE ONLY

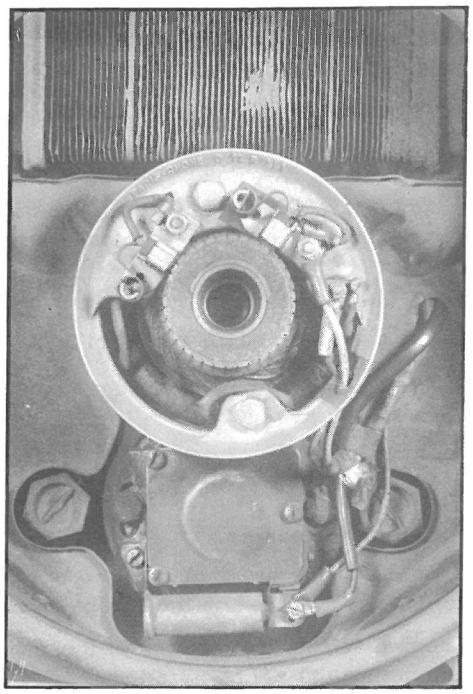

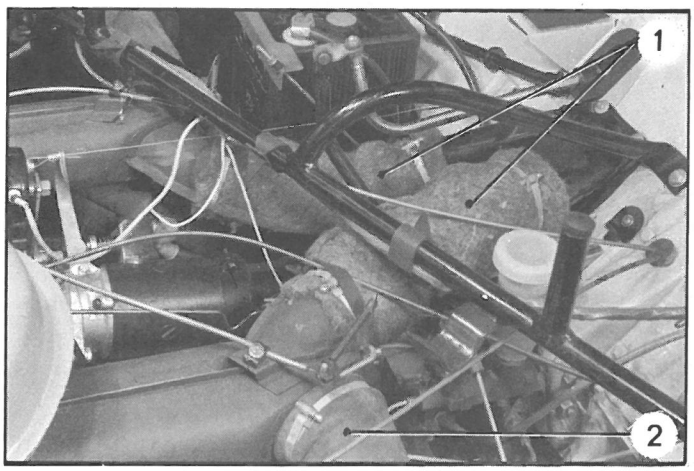

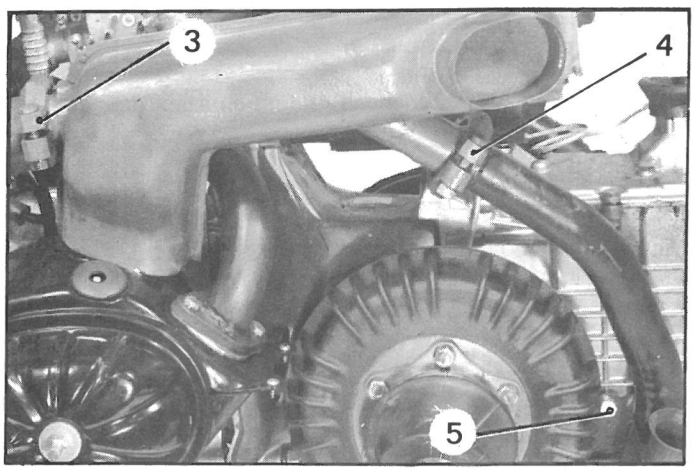

REMOVAL

1. *AZ vehicles(2 CV 4 - 2 CV 6 and Vans all types):*

Remove :
- bonnet,
- wings,
- bonnet side panels,
- headlamp bracket assembly,
- bonnet stay.

AY vehicles :
Hold bonnet open to maximum extent, using a cord *(except Mehari).*

Remove :
- bonnet stay,
- spare wheel,
- jack,
- bumper assembly, and finishing panel bracket.

2. Disconnect electrical harnesses :

Disconnect :
- negative lead from battery,
- spark plug leads,
- leads to coil,
- leads to alternator,
- leads to distributor and dynamo *(on vehicles thus equipped. In this case fan must be removed). (Tool 3006-T a).*
- lead to horn.

Free leads from retaining clip *(if necessary).*

3. Disconnect carburettor controls :

Disconnect petrol feed pipe from pump or from piping on left-hand sidemember *(as required).*

Plug pipe.

4. Free heat exchangers *(as necessary) :*

Disconnect heating ducts (1) from exchangers.
Remove :
- fixing clamps (3) on manifold,
- fixing clamps (4) on expansion chamber.

Slightly loosen the two expansion chamber fixing screws (5) on gearbox casing.
Free exchangers, complete with outlet ducts (2) without disconnecting heating controls. Place them on housing of heating distribution unit.

5. Loosen handbrake adjusting nuts.

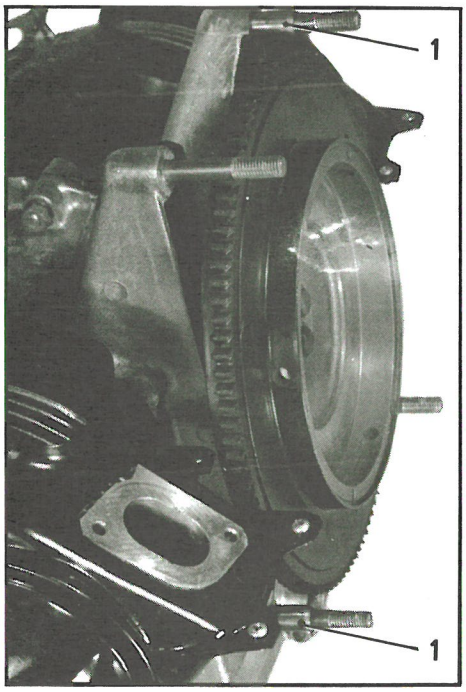

6. Remove the engine :

Remove the two engine holding screws on front crossmember.

Raise engine-gearbox assembly (using lifting chain MR. 630-44/4).

Chock up assembly under gearbox so as to leave a clearance between crankcase and front crossmember.

Remove :

- horn and its bracket,
- exhaust pipe or silencer *(if necessary)*.

Remove nuts from the four engine-gearbox assembly studs (using spanner 1791-T for lower nuts).

Free the engine by pulling it towards the front and support it by the lifting chain so as to avoid any strain on the gearbox control shaft.

NOTE : In order to avoid damage to crankcase do not move engine by drawing it along the ground.

FITTING

7. Preparing the engine :

Ensure that the two centring dowels (1) are correctly positioned on the engine crankcase.

Check also that the location of these dowels in clutch housing is not distorted.

IMPORTANT NOTE : Should the housings for the dowels be damaged, the engine crankcase or gearbox housing must be replaced since any misalignment of the engine-gearbox assembly will cause a rapid deterioration of the clutch.

To check alignment of engine-gearbox assembly, see relevant operation.

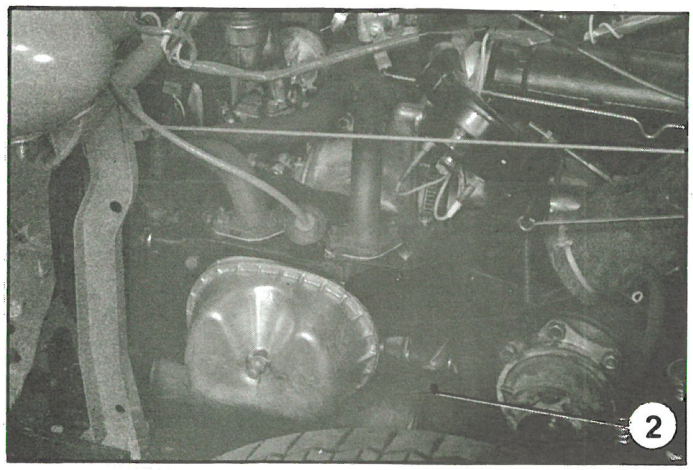

8. Connecting engine to gearbox :

a) *Vehicles with long control shaft :*

Offer up engine on box and fit control shaft in crankshaft needle bearing socket (smear socket and control shaft with silicone grease).

b) *Vehicles with short control shaft :*

Engage a gear. Offer up engine on box, insert studs to bring hub of disc in contact with control shaft. Turn the flywheel by hand to ensure that splines or toothed gearing is correctly meshed.

As necessary, place expansion chamber (2) on lower left-hand engine-gearbox assembly stud, between crankcase and nut.

9. Connect pipe or expansion chamber to exhaust manifold *(as necessary)*.

Tighten the nuts on the engine-gearbox assembly studs (use shakeproof washers) (spanner 1791-T).

4109

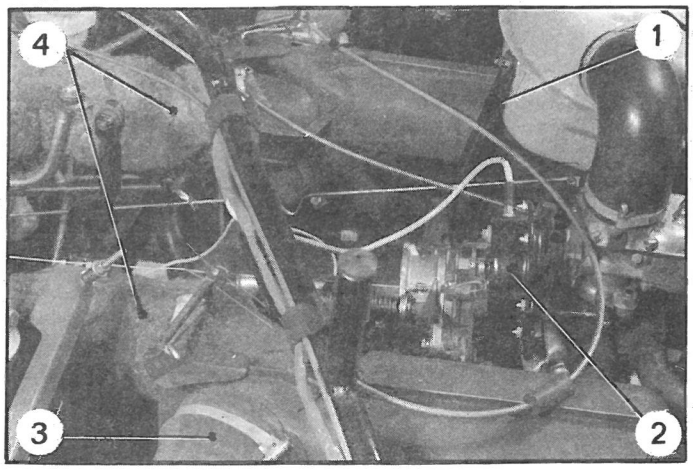

4041

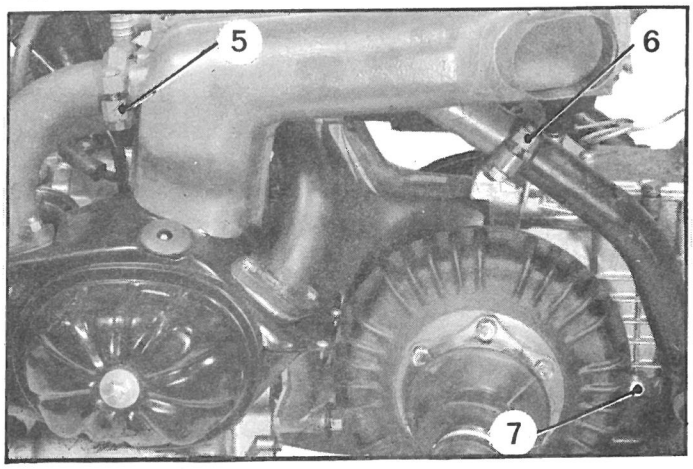

4105

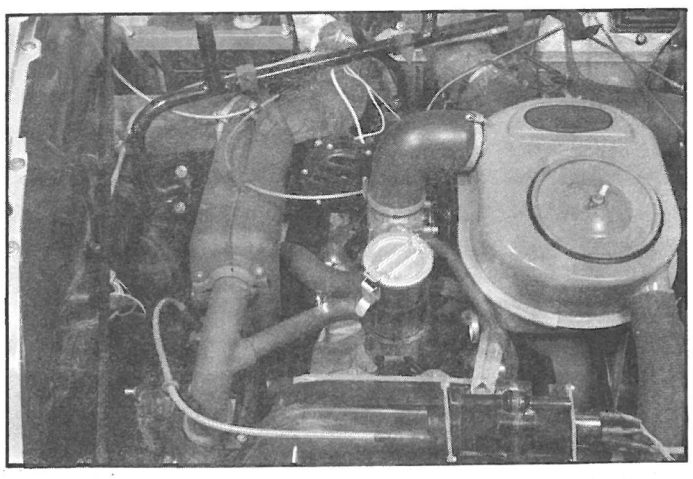

10. Remove chock placed under gearbox and lower engine onto front crossmember.
Tighten screws securing front flexible mountings (with lock washer under head) to 60 mΛN (6 m.kg)

11. Connect petrol feed hose to reservoir pipe or to petrol pump.

12. To upper engine gearbox assembly studs fix :
- horn (2) and its bracket,
- inlet silencer fixing lug (1) *(if necessary)*.

13. **Adjust handbrake.**

14. **Check and adjust, if necessary, clutch clearance.**

15. **Fit carburettor controls :**
Connect controls rod to butterfly spindle lever (fit felt washer).
Connect choke cable. Adjust it while leaving a travel of between 3 and 5 mm.

16. **Fit head exchangers** *(if necessary)* :
Position outlet ducts (3) in the wheel arches, and the exchangers on upper cylinder block cooling plates.

Fit but without tightening :
- fixing clamps (5) on manifold,
- fixing clamps (6) on expansion chamber.

Firmly tighten these four clamps and the two screws securing the expansion chamber (7) on gearbox.

Connect heating ducts (4) to exchangers.

17. Fit headlamp bracket assembly *(on models which are thus equipped)*.

18. **Bumper and finishing panel bracket assembly** *(AY vehicles)*.

19. **Connect electrical harnesses :**
Connect supply leads :
- to coil,
- to distributor and to dynamo *(on models thus equipped)*. Fix harnesses in the clip on left-hand wing *(if necessary)*,
- to horn,
- to alternator.

Connect :
- sparking plug leads,
- negative lead to battery.

20. **Fit air filter.**

21. Top up engine oil.
(TOTAL GT 20 W 40 oil or GTS 20 W 50).

22. Start and warm up engine.
Check sealing of exhaust gaskets.

23. **Check slow running.**

24. Check oil pressure, if necessary.

25. Fit bonnet stay, jack and spare wheel, or wings and bonnet side panels and bonnet.

REMOVING AND FITTING THE PISTON RINGS
(Engine all types)

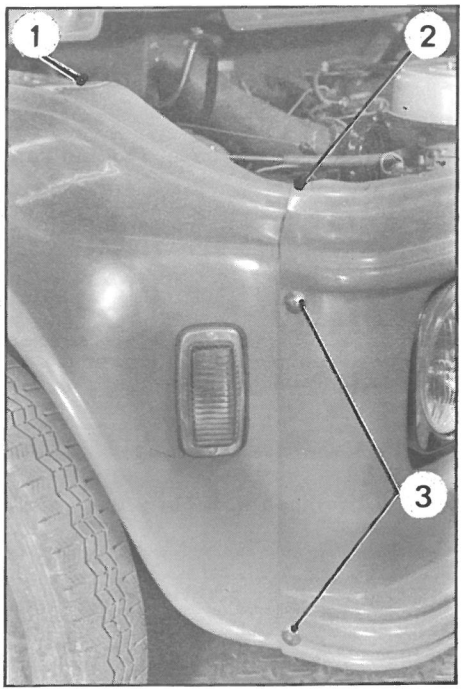

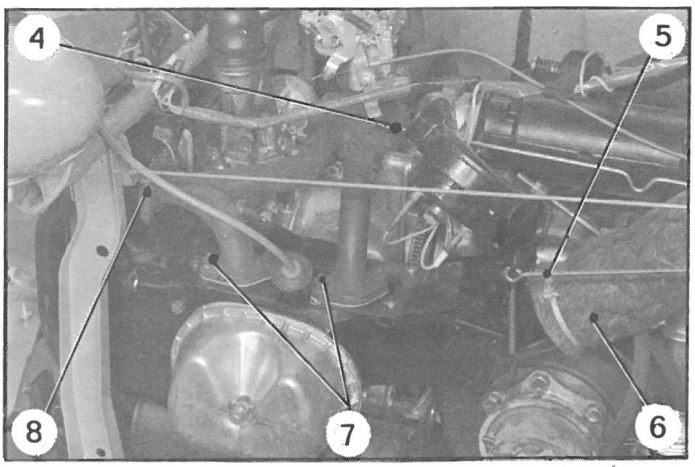

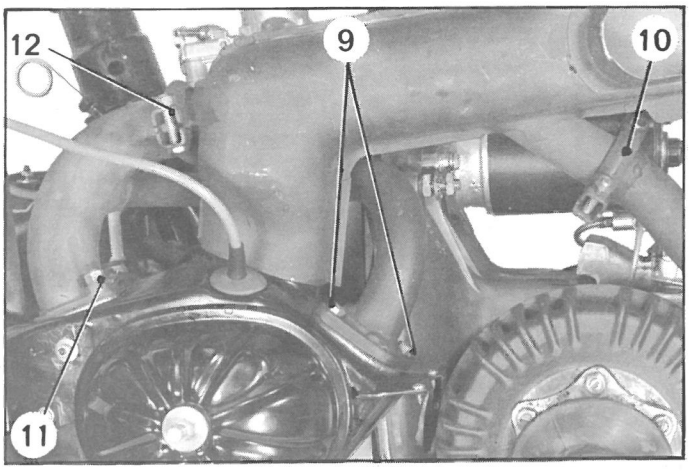

REMOVAL

NOTE : When working on the two cylinders, remove the engine (*see Op. A. 100-4*).

1. Vehicle all types (*except AY.CA Mehari*) :

Remove :
- spare wheel, (*according to model*).
- bonnet side panel,
- wing,
- wheel arch (*according to model*) on side of engine where work is to be carried out.

2. AY.CA (*Mehari*) **vehicles :**

Remove ;

a) - the engine bonnet,
- jack or crank handle (*according to model*).
- radiator grille fixing screws (1), (2) and (3),
- front grille bracket fixing screws on platform.

b) Unscrew front grille bracket fixing screws on platform on side opposite to that on which the work is to be carried out.
On the side on which work is to be carried out, deflect body elements sufficiently so as to gain access to the work.

3. Disconnect negative lead from battery terminal.
Disconnect :
- heating ducts (6) (*according to model*).
- warm air outlet duct (*according to model*).
- accelerator rod (4) from throttle control lever.

4. Remove inlet silencer (*according to model*).

5. Freeing carburettor and manifold assembly :

Without disconnecting choke control or heating shutter control cable (*according to model*).

a) Disconnect rod (5) and its spring (early bonnet design).

b) Remove half-clamps (8) or (10) and (12) from exhaust pipe.

c) From each side remove manifold fixing nuts (7) or screws (9) and nuts (11), on cylinder heads.
Disconnect petrol feed pipe to carburettor.

d) Remove all the components and let them rest on the opposite side of engine to that on which work is to be carried out.

e) Remove gaskets between manifolds and cylinder heads.
Blank off cylinder head ports.
Disconnect sparking plug lead.

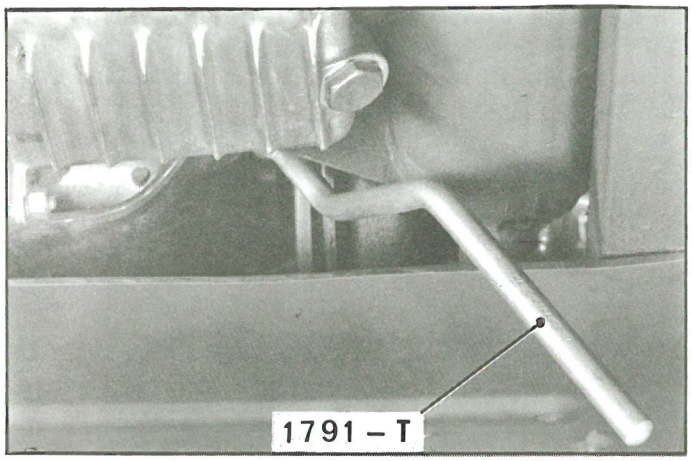

6. Remove cylinder head cover (taking care to avoid flow of oil) and bring piston to to dead centre, end of compression *(on each side where work is to be carried out).*

7. **Vehicles equipped with early type air intake cowl :**

a) Remove fan (extractor 3006-T a).

b) Slacken :
- the nut securing the expansion chamber lug (spanner 1791-T).
- collar securing exhaust pipe on expansion chamber or silencer,
- pivot expansion chamber or exhaust pipe outwards to gain access to air collector in order to move it forward.

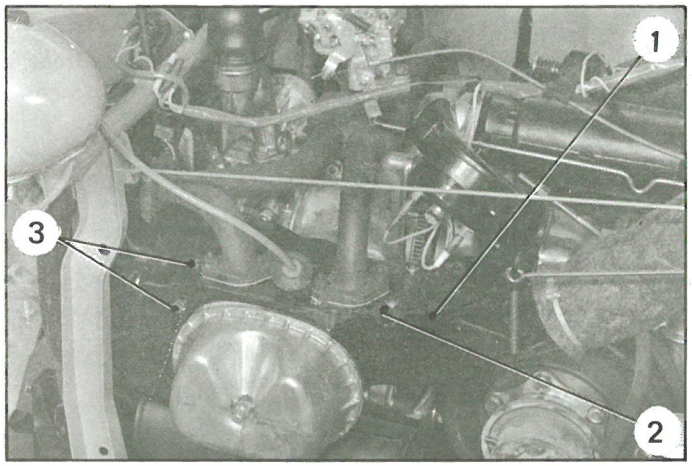

c) Remove :
- heating air intake (1),
- upper pipe (2) and screws (3) *(on side opposite to that where work is to be carried out).*
- the two screws securing the flexible mountings on the platform.

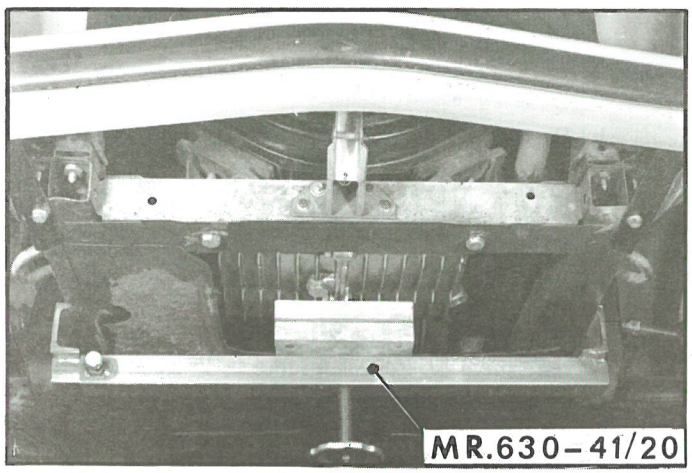

d) Loosen the four front bracket nuts on the air collector.

e) Raise engine using bracket MR. 630-41/20 or failing this, a jack while placing a wooden chock between engine crankcase and head of jack.

Pivot engine to the right, then to the left so as to shift the air collector towards the front, without removing ii.

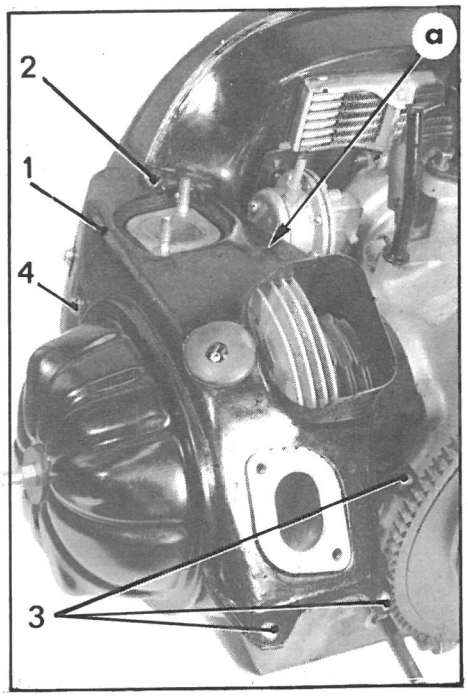

8. Engines with new air intake cowl :

a) Remove upper duct (1) :

Remove :

- screws (2),
- screws at « a »,
- screws (3),
- screw (4).

Free sparking plug lead retaining lug

Free duct (1).

b) Remove lower duct (6).

Remove :

- fixing screws (5) under cylinder head,
- fixing screw on air collector at « b »,
- free duct (6).

9. Removing cylinder head :

Remove union screw securing the cylinder head lubrication tube.

Remove the three cap nuts (7), starting with lower nut.

Remove cylinder head with valve push-rods.

10. Remove cylinder.

Remove tappets if necessary, (extract them with a brass hook).

11. Remove rings and clean grooves (Rings should turn freely in the latter).

NOTE : *Since June 1972.* some 602 cc engines (3 CV) have been fitted with U-FLEX scraper-collector rings. To replace those rings the piston must be removed.

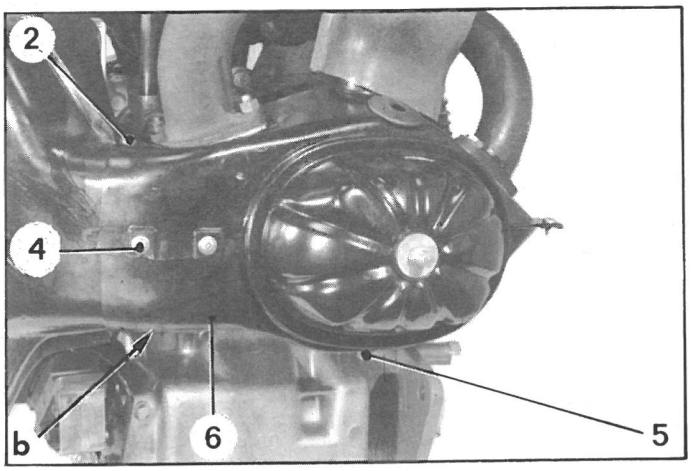

12. Removal of piston *(if necessary) :*

Remove :

- gudgeon pin retaining circlips,
- gudgeon pin, using extractor MR. 630-23/16.

Free piston.

Remove piston rings.

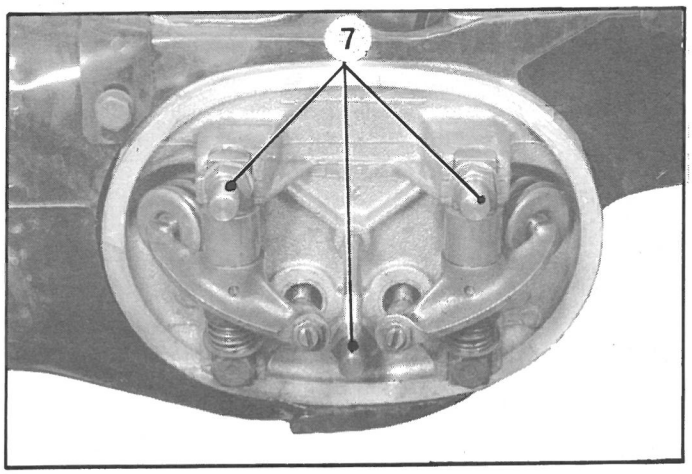

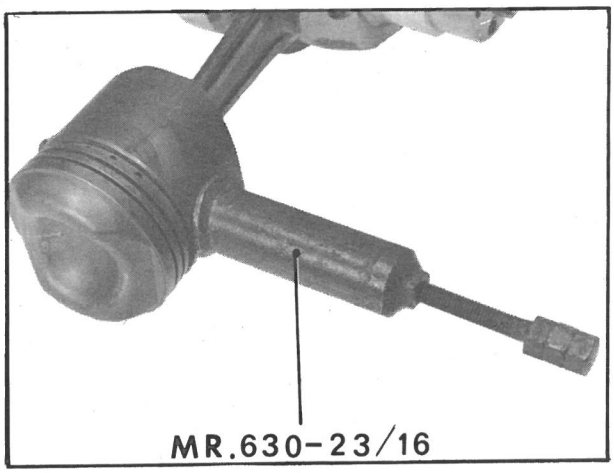

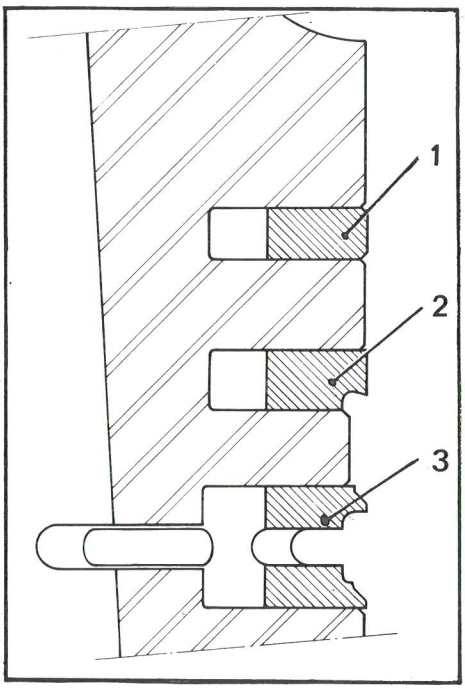

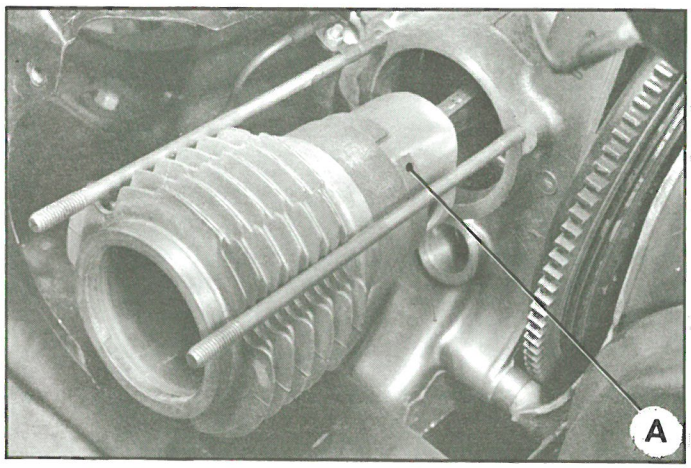

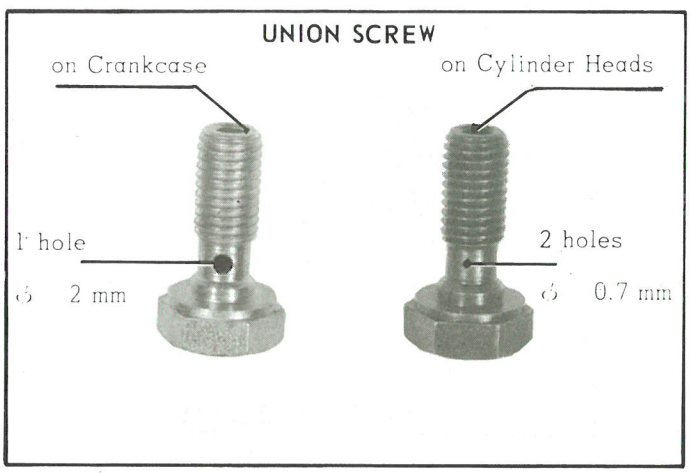

FITTING

13. Engines equipped with conventional rings :

a) Fit rings :
The compression ring (1).
The scraper ring (2), and the scraper-collector ring (3) are marked (HAUT, H or TOP) engraved on one face.
On fitting, this marking should be placed upper most so that it faces the top of the piston.
Fit rings to piston so that the ring gaps are at an angle of 120° from each other. Badly positioned rings will result in excessive oil consumption.

b) Fit cylinder
Oil piston and position a piston ring fitting fixture (A) over it.
425 cc engine (2 CV) fixture 1654-T
435 cc engine (2 CV) fixture 3063-T
602 cc engine (3 CV) fixture 3002-T

When sliding the fixture over the pistons, take care that the piston rings are not jammed.
Fit the cylinder, previously oiled, without rotating it, positioning correctly the gaps in the fins, to coincide with the cylinder head studs.

Push until fitting fixture is free from piston and remove it.

14. Engines fitted with U-FLEX scraper collector rings :

IMPORTANT :
When decompressed these rings have a larger diameter than that of the piston and cannot be fitted without the piston ring fitting fixture 3010-T.

a) Fit a retaining circlips on gudgeon pin (arrow side).
Fit rings to piston (taking same precautions as detailed at para. 13 a).
Oil piston cylinder assembly.
Fit piston into cylinder.
Use fixture 3010-T.
Introduce piston into lower part of cylinder.
Fit previously oiled gudgeon pin (providing a gap to enable the connecting rod small end to be fitted).

b) Fit cylinder piston assembly to engine :
Oil connecting rod small end.
Offer up cylinder piston assembly on connecting rod with arrow towards front of engine.
Complete fitting of gudgeon pin.
Fit second gudgeon pin retaining circlip.
Complete fitting of cylinder, positioning correctly the gaps in the fins, to coincide with the cylinder head studs.

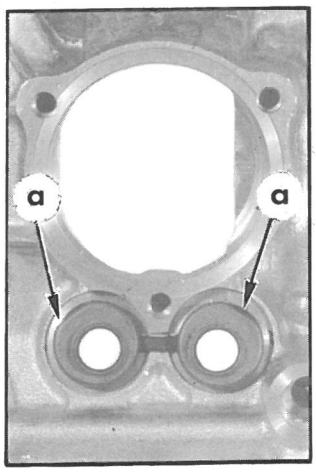

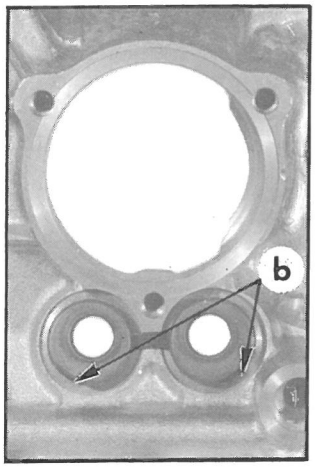

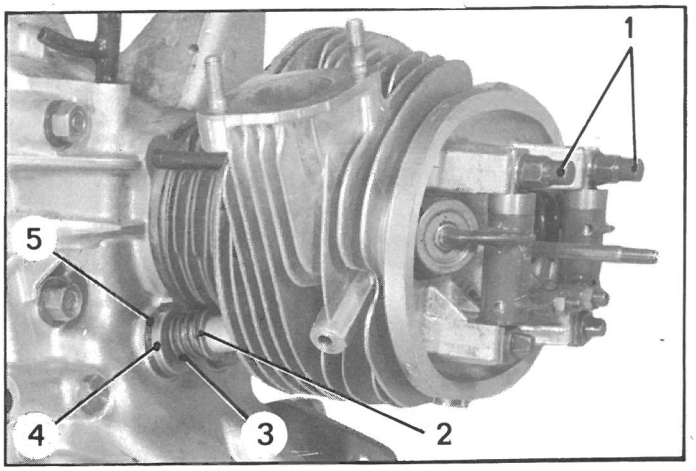

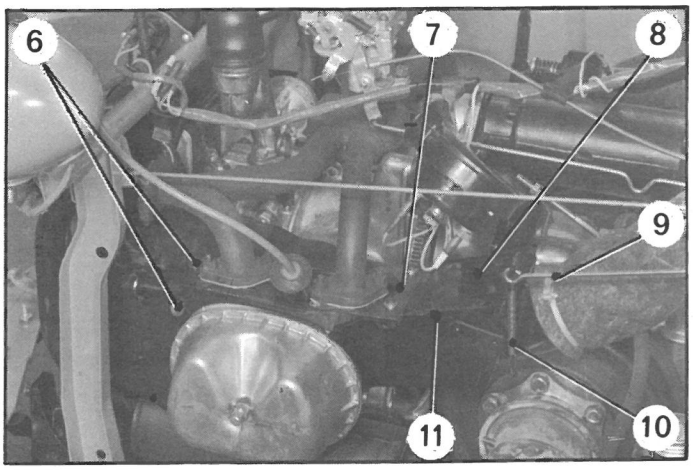

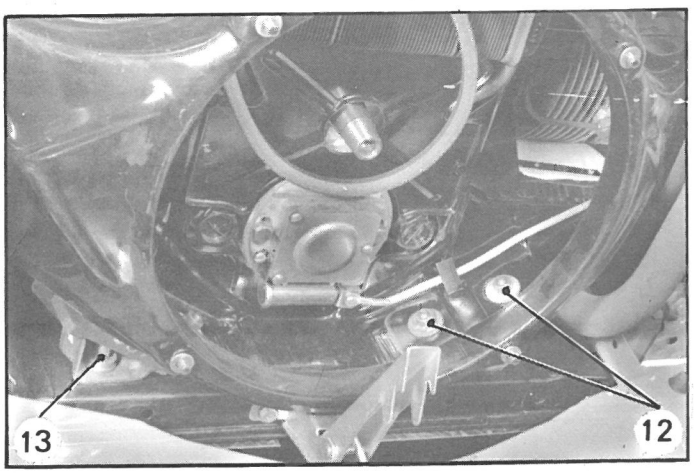

IMPORTANT : Since December 1972, the push-rod sleeve gaskets have no centring heel in crankcase and their positioning varies according to engine type (see photos opposite).
This type of gasket cannot be fitted to engines produced before this date.

Engines M 28 and M 28/1 (602 cc)
Flat parts « a » positioned facing upwards.

Engine A 79/1 (435 cc)
Flat parts « b » must be positioned facing downwards.

15. Fitting cylinder head :

Fit valve push-rod into sleeves.
Position cylinder head fitted with washers (2), springs (3), spring cups (4) and double joint (5).
Gradually tighten the three nuts (1) (flat washers) until cylinder head bears on cylinder and cylinder on crankcase.
During this operation, guide sleeves so that shoulders of sealing rings (5) bed down into crankcase bores.
Tighten temporarily nuts (1) to torque 10 mAN (1 m.kg).

16. Connect cylinder head lubrication tube.
Ensure that holes in union screw are not obstructed (see page 4 for correct type union screw).
Place new double copper gasket on union and tighten to torque 10 to 13 mAN (1 to 1.3 m.kg).

17. Fit air collector :

Engines fitted with early air intake coul :

a) Position air collector and lower engine in order to fit the screws (13) securing the flexible mountings on the platform (lock washer under screw head) but do not tighten them.
Locate air collector on engine.

b) Fit upper duct (7) on each side.
Tighten screws (6) (flat and shakeproof washers) to between 10 to 15 mAN (1 to 1.5 m.kg).
Tighten nuts (12) to 20 - 25 mAN (2 to 2.5 m.kg).

c) Tighten flexible engine mounting fixing screws (13) on platform to torque 60 mAN (6 m.kg).

d) Fit heating air intake (11) and tighten screws (flat and shakeproof washers).

Connect the control rod (9) for shutter (8) and fit spring (10).

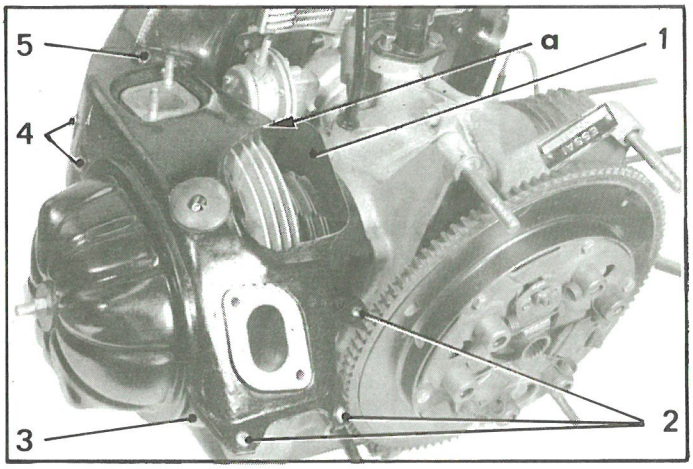

18. Fit cylinder head cooling ducts :

Engines fitted with new air intake cowl

Fit lower duct (3), tighten fixing screws (8) under cylinder head and air collector fixing screw at « b » (contact washer).

Fit upper duct (1), tighten screws (2), (4), (5) and at « a » (contact washer).

Insert spark plug lead support lug under screw (5).

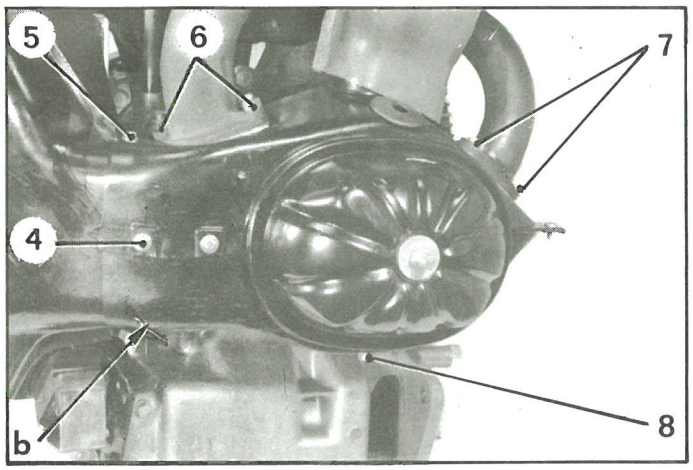

19. Fit manifold carburettor assembly :

Fit new gaskets between manifold and cylinder head.

NOTE : On engines fitted with new air intake cowl inlet and exhaust gaskets differ.
The gas vent hole is larger on exhaust gaskets.

Position manifold, tighten screws and nuts (6) and (7) to 19 m\\ (1.9 m.kg).

20. Tighten cylinder head nuts :

Tightening torque : 20 to 23 m\\ (2 to 2.3 m.kg).

Follow tightening sequence as indicated below :
Front upper nut.
Rear upper nut.
Lower nut.

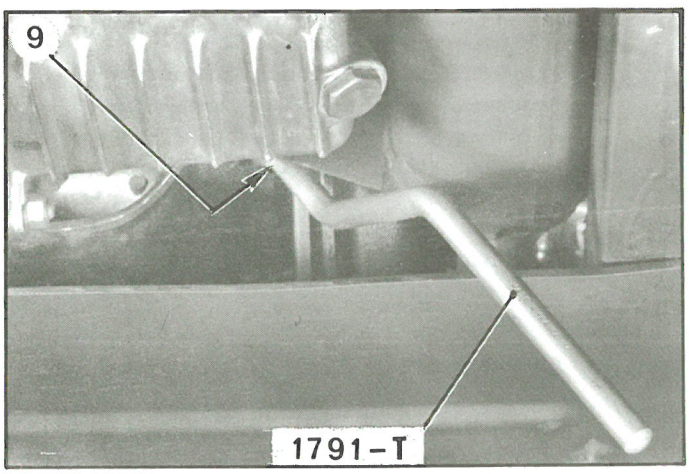

21. Connect exchanger to exhaust pipe *(according to model) :*

Engines fitted with early air intake cowl (left-hand side only) :

Replace exhaust pipe.
Insert expansion chamber fixing lug under nut (9) *(according to model)* (spanner 1791 T).

Tighten silencer and manifold connection clamps.

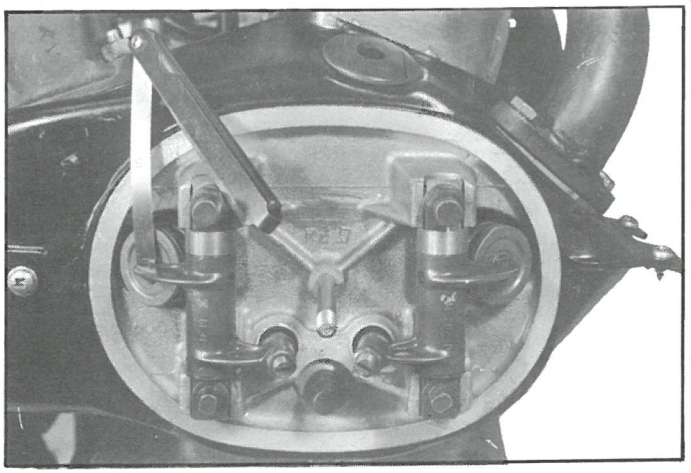

22. Adjust rocker-arm clearances (engine cold) :

Inlet and exhaust = 0.20 mm.

Adjust on valve when the corresponding valve of the opposite cylinder is at maximum opening.

23. Fit cylinder head covers :

Check that there is no roughness on the joint surfaces.

Stick rubber seal on cylinder head cover (BOSTIK 1400 adhesive or MINNESOTA F 19).

Fit cylinder head cover, tighten nut to 5 - 7 mN (0.5 to 0.7 m.kg).

NOTE : Incorrect fitting of the rubber seal or insufficient tightening of the cover securing nut may entail total loss of the engine oil. On some engines the « sheet metal » cylinder head covers are marked with the letter « O ». Cover should be positioned with this mark facing upwards.

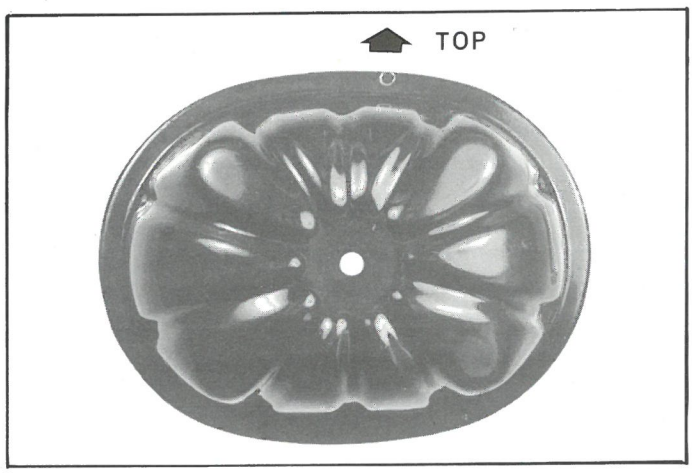

24. Fit the fan :
(according to model).

Position the fan so that the starting handle, when engaged, is horizontal with one cylinder at the static timing point. (locating hole for timing pin)

Tighten screw (1) (shakeproof washer) to 49 - 51 mN (4.9 to 5.1 m.kg).

Lock engine flywheel with a screwdriver

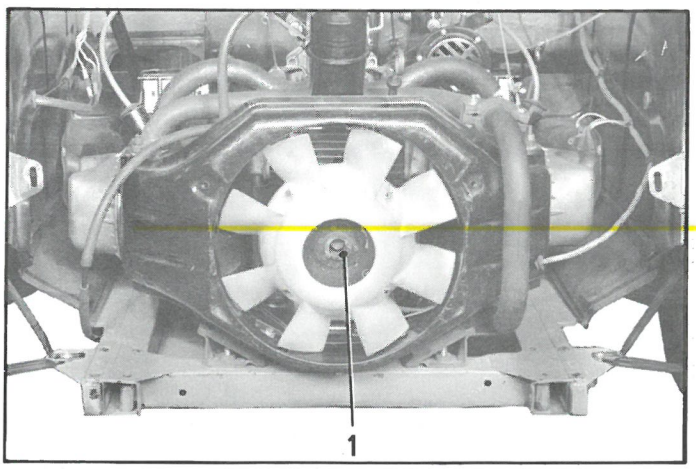

25. Connect petrol feed pipe to carburettor.

Connect accelerator rod to throttle valve control lever.

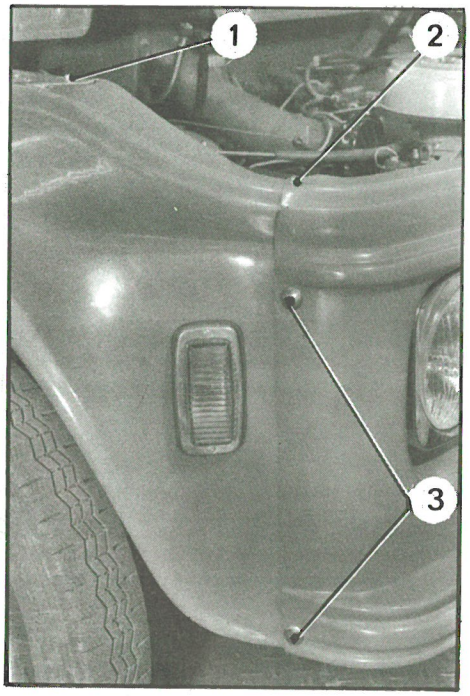

26. Connect heating and outlet ducts and spark plug lead.

27. **Vehicles all types** *(except AY-CA (Mehari))* :

Fit :
wheel arch *(according to model)*.
wing and bonnet side panel
spare wheel *(according to model)*.

28. **AY.CA vehicles** *(Mehari)* :

Replace body components.
Fit radiator grille bracket fixing screws on platform.
Tighten radiator grille fixing screws (1), (2) and (3).
Fit bonnet.
Fit jack or handle.

29. Connect negative lead to battery terminal.

30. Fit inlet silencer :
(according to model).

31. Fit spare wheel :
(according to model).

32. Check engine oil level.

33. Start up engine and check sealing of :
union screw for cylinder head lubrication pipe,
push rod sleeves,
rocker arm covers.

I. REMOVING AND FITTING A PUSH-ROD SLEEVE

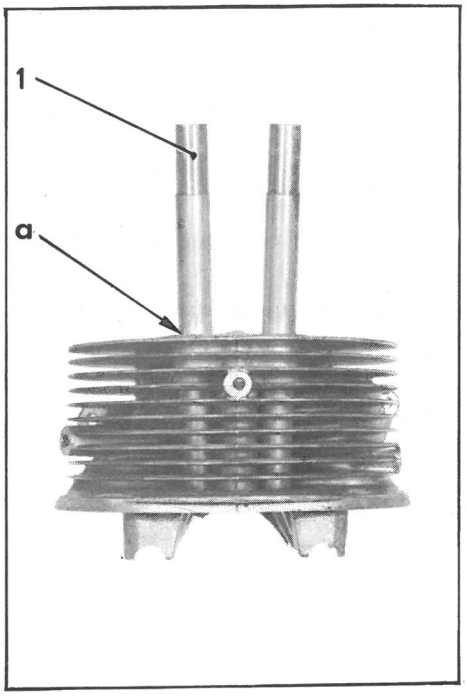

REMOVAL

1. Remove the cylinder head.

2. Remove rocker arm spindle and rocker arm assemblies.

3. Removing push-rod sleeve :

a) Saw off push-rod sleeve (1) flush with underside of cylinder head at « a ».

b) With a saw blade cut lengthwise the portion of sleeve remaining in cylinder head.

NOTE : Do not damage the bore of the cylinder head.

c) Drift out the sleeve using a shouldered mandrel.

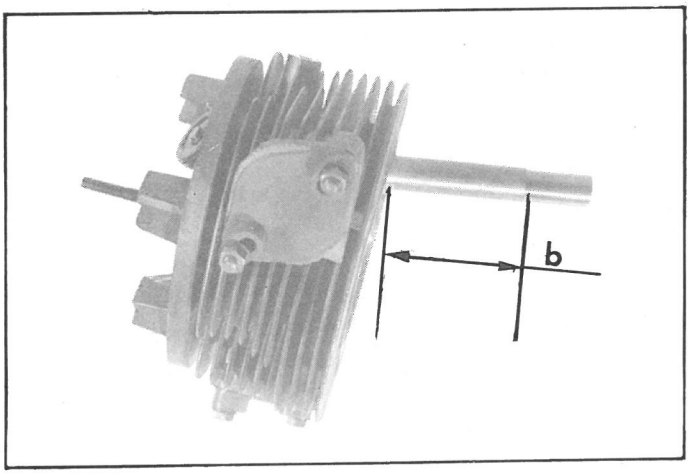

FITTING

4. Fitting push-rod sleeve.

Insert sleeve into cylinder head until measurement « b » equals 47.5 mm *(2 CV engine)* or 71 mm *(3 CV engine)*.

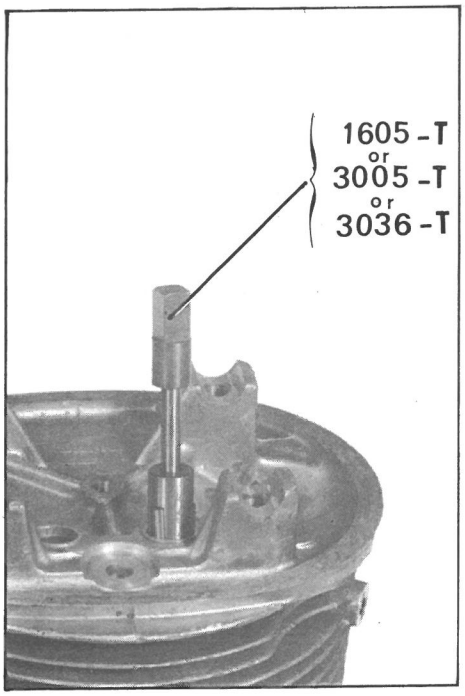

5. Expanding sleeve :

Tube expander 1605-T : 425 cc engine (A 52)
Tube expander 3005-T : 425 cc engines (A 53) - (A 79/0)
602 cc engine (M 4)
Tube expander 3036-T : 435 cc engine (A 79/1)
602 cc engines (M 28/1) (M 28)

a) At upper part :
Fit expander, inserting rollers 12 mm deep into sleeve.

Turn clockwise lightly pressing on tapered bar.

Stop when the roller end appears at bottom of sleeve.

Remove, the bar turning it anti-clockwise.

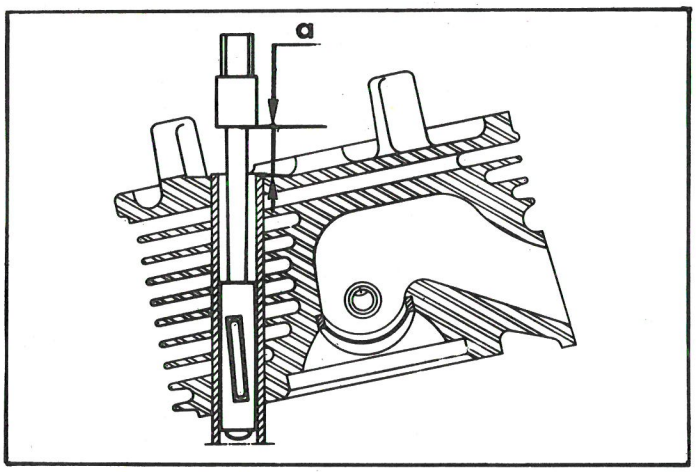

b) At lower part :

Insert expander until measurement « a » equals 14 mm.

Turn clockwise, bearing lightly on tapered bar.

Stop when expander has descended 15 mm.

Remove by turning bar anti-clockwise.

6. Fit rocker arm spindle and rocker arm assemblies.

7. Fit cylinder head.

8. Adjust rocker arms.

II. REMOVING AND FITTING A ROCKER-ARM SPINDLE, A ROCKER ARM, A PUSH-ROD, A VALVE SPRING, OR A SEALING JOINT

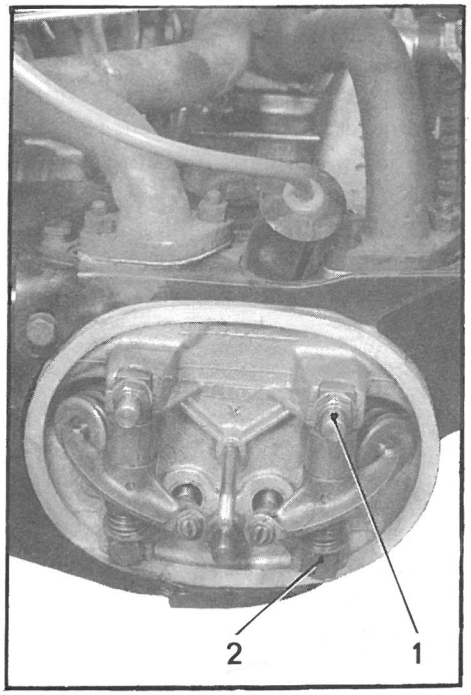

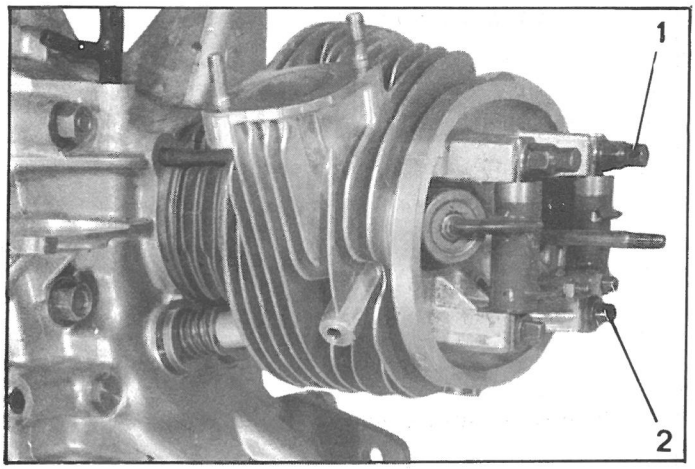

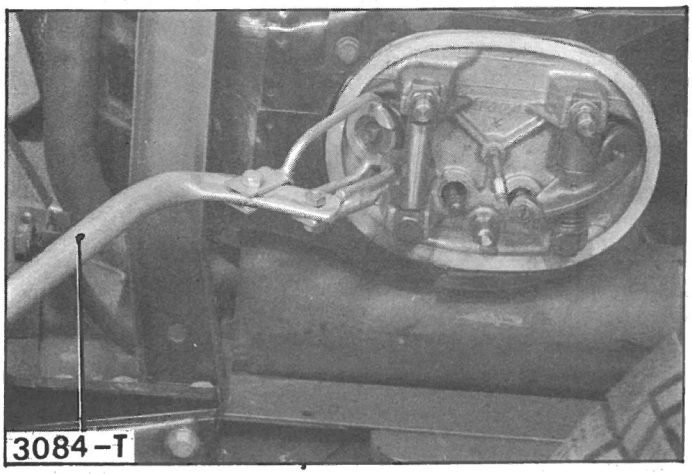

REMOVAL

1. Vehicles all types (except Mehari) :

Remove wheel arch, wing and bonnet side panel.

2. AY.CA (Mehari) vehicle :

Disconnect front grille (with its bracket) from wing on side on which work is to be carried out.

Deflect body elements sufficiently to gain access to the work.

3. Remove cylinder head cover :

Position a container to collect the oil.

4. Remove rocker-arm spindle :

a) Turn engine to bring piston to T.D.C end of compression (valves closed).

b) Remove :
- cap nut (1),
- screw (2) (spanner 1677-T as necessary).

c) Free rocker arm spindle, distance piece, rocker arm, and spring assemblies *(early type cylinder head)* or flexible washer *(new type cylinder head)* and thrust washer.

5. Free valve push-rod :

6. Remove valve springs :

Position piston at static ignition point (heating hole for timing pin).

a) Fit stripped spindle to act as support for valve spring compressor 3084-T.
Tighten screw and box nut.

b) Position valve spring compressor 3084-T as shown opposite.
Compress springs.

c) Free :
- the half cotters,
- the cup,
- the two springs,
- the centring collar,
- the valve stem seal.

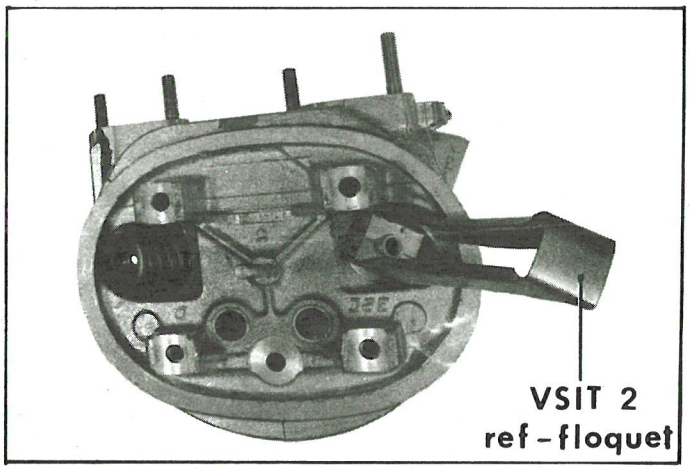

FITTING

7. Fit seal :

Oil valve stem and place plastic valve fitting cap on end of stem. Slide seal (3) on cap. Push down seal until it abuts against guide.

Use compressing tool, reference FLOQUET VSIT 2 to complete the fitting operation.

8. Fit valve seals :

a) Position :
- centring ring collar (1),
- inside spring (2),
- outside spring (6),
- cups (4).

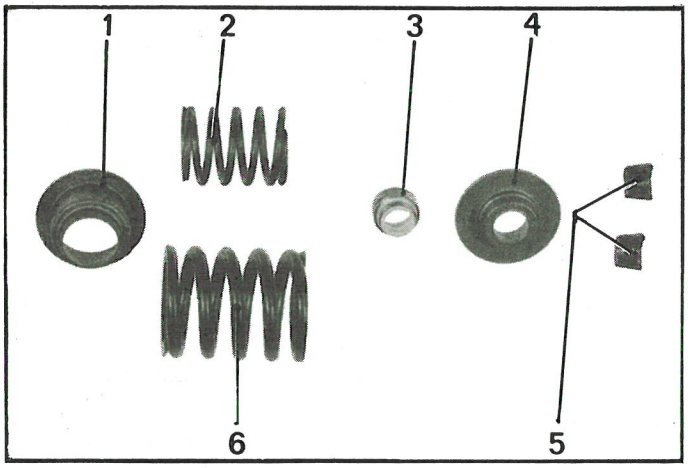

b) Using valve spring compressor 3084-T, compress springs and insert half cotters (5).

c) Remove :
- valve spring compressor 3084-T,
- spindle.

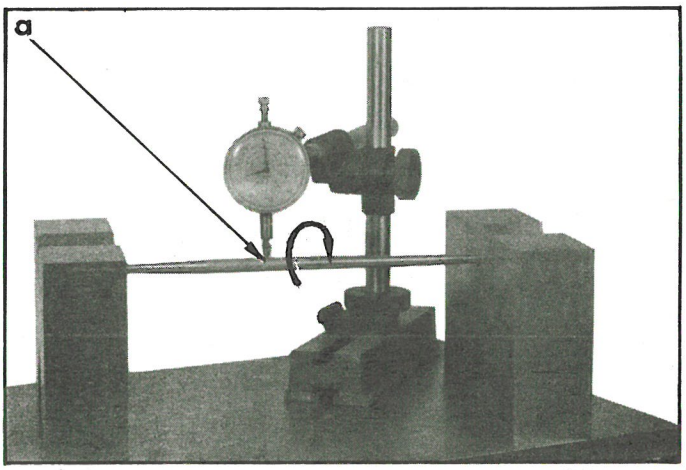

9. Fitting valve push-rod :

a) If an original push-rod is to be refitted, check that it is true to within 0.2 mm. Check it on two vee blocks. Straighten with a mallet if necessary.

b) Place the push-rod in position, previously lubricated, in the sleeve, the copper ball end on the rocker side.

FIRST FITTING

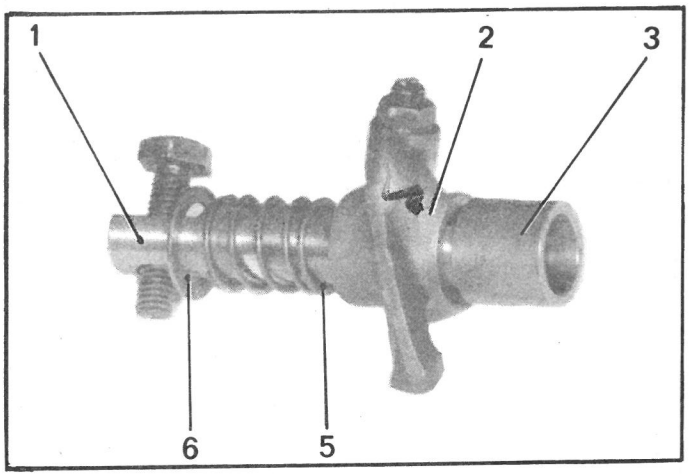

SECOND FITTING

1076

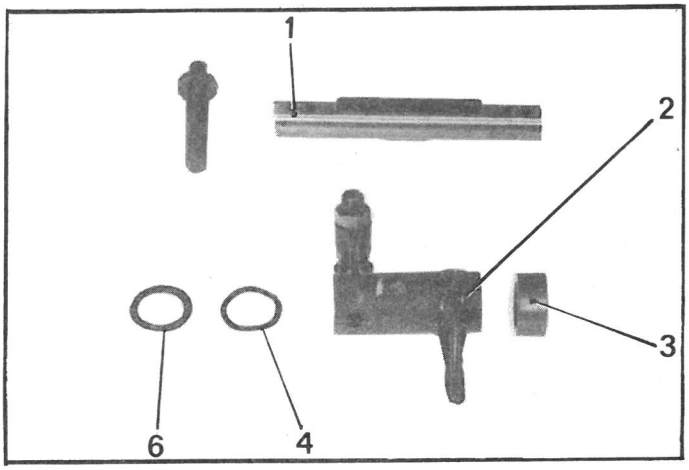

4278

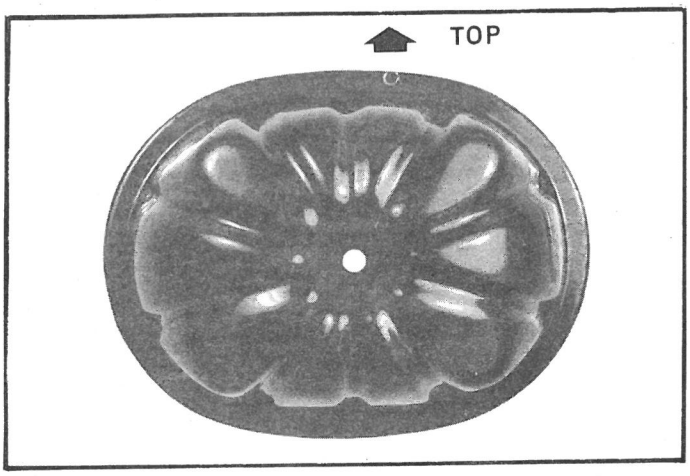

10. Fit rocker arm :

a) Place on spindle (1) :
- thrust washer (6),
- spring (5) (*first fitting*),
- flexible washer (4) (*second fitting*),
- rocker arm (2),
- distance piece (3).

b) Offer up spindle thus equipped on rocker arm brackets.

c) Tighten cap nut on cylinder head stud with torque of 20 to 23 mΛN (2 to 2.3 m.kg).

d) Check tightness of the two other nuts.

e) Tighten lower screw securing the spindle (spanner 1677-T, *second fitting*).

11. Adjust rockers (engine cold) :

Adjust one valve, when the corresponding valve on the opposite cylinder is at maximum opening.

Inlet and Exhaust = 0.20 mm

12. Fit cylinder head-covers :

Ensure that there is no roughness on the gasket faces.

NOTE : The letter « O » is stamped on the engine cylinder head cover of a number of engines. Cover should be positioned with this mark facing upwards.

Moderately tighten nuts (from 5 to 7 mΛN (0.5 to 0.7 m.kg).

13. Top up engine oil level.

14. All types of vehicle (except Mehari) :

Fit wheel arch (*according to model*), wing and bonnet side panel.

15. AY.CA (Mehari) vehicle :

Connect front grille (with its bracket) to wing.

I. ELIMINATING A LEAK FROM THE ENGINE BEARING.

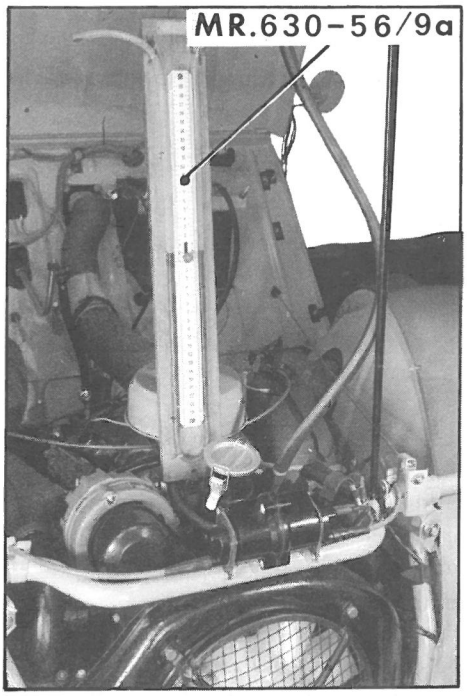

1. Checking the vacuum in the engine crankcase :

a) Use water pressure gauge MR. 630-56/9 a.
Remove oil dipstick.
Connect one of the pressure gauge ends on oil dipstick tube.

b) With engine idling, gently accelerate in order to stabilize pressure gauge levels.

NOTE : *The liquid should rise in the section of pressure gauge tube linked to engine.*

c) Read the difference in levels.
At idling speed, the minimum difference in levels should be 5 cm.

d) If the vacuum reading is not correct fit a new breather.

e) Carry out a road test with engine hot.
If a leak still exists, it is necessary to work on the engine.

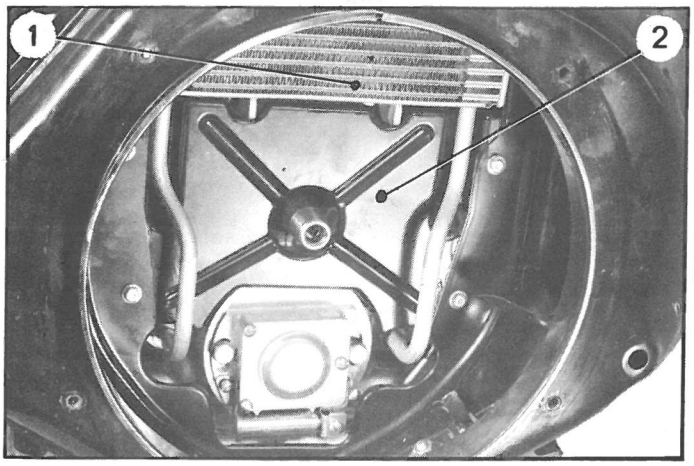

2. Remove front grille and fan (use extractor 3006-T a).

3. According to vehicle type, remove dynamo or oil cooler (spanner MR. 630-11/18) *(see relevant operation).*

a) If necessary, remove rear sealing panel from air collector.

b) Check that lateral and diametral clearance of crankshaft is not excessive.

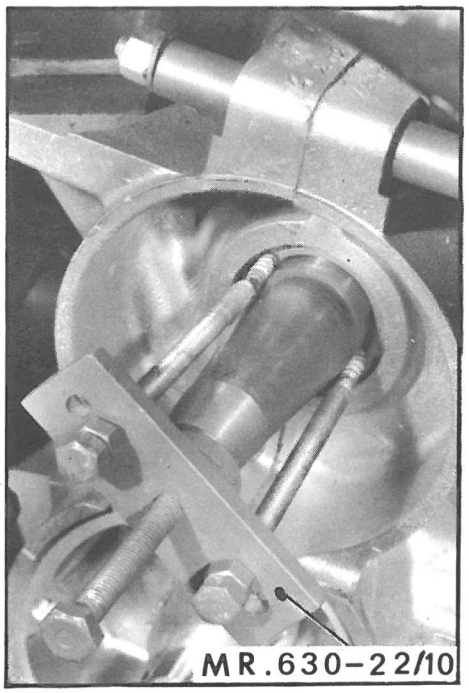

4. Remove front sealing bush :

a) Drill in the latter two diametrically opposed holes, 2 mm in diameter.

b) Screw stems of extractor MR. 630-22/10 into these holes.

c) Remove bush by screwing central screw of extractor.

IMPORTANT : Make sure that there are no dents or longitudinal cracks on the crankshaft journal on which the seal is fitted.
Never polish the crankshaft journal as this would destroy the microturbine (oil thrower) on this journal.

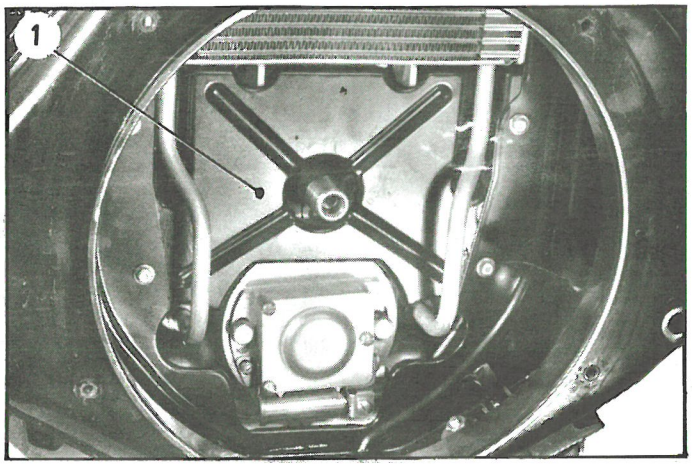

5. Smear bore and outer surface of ring with high melting point grease.
Locate the rubber edge of the sealing bush towards the inside of the engine (the manufacturer's reference mark towards the outside).

6. **Fitting front sealing bush :**
Fit the bush using a tube (external diameter = 45 mm, internal diameter = 31 mm, length = 100 mm).

The end of the sealing bush when fitted should stand down 0.5 mm from the crankcase face.

NOTE : When fitting the sealing bush ensure that the bush lip is not damaged, as this would cause a leak.

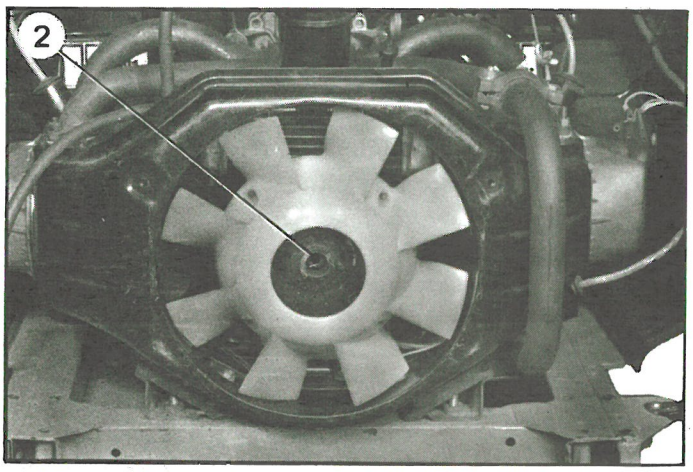

7. Fit in position rear sealing panel (1) of air collector (if fitted).

8. Fit, according to type of vehicle, dynamo or oil cooler *(See relevant operation).*

9. Start up the engine and allow it to run for a few minutes.
Check seal of cooler union joints *(if necessary).*

10. Fit the fan.
Tighten fixing screw (2) to 49 to 51 mΛN (4.9 to 5.1 m.kg).

11. Fit the grille.

12. Top up oil level.

II. ELIMINATING A LEAK FROM THE REAR BEARING.

2839

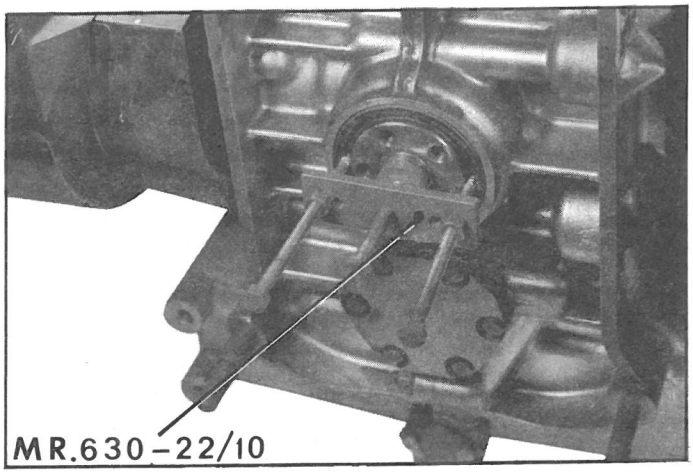

1. Check the vacuum in the engine crankcase :
(See chapter I).
If a leak still exists after fitting a new breather and after the road test, it is necessary to work on the engine.

2. Remove the engine :
(See relevant operation).

3. Remove the clutch and flywheel assembly.

4. Remove rear sealing bush :

a) Drill in bush two diametrically opposed holes 2 mm in diameter.

b) Screw stems of extractor MR. 630-22/10 into these holes.

c) Extract bush, by screwing the central screw of extractor.

PL.305

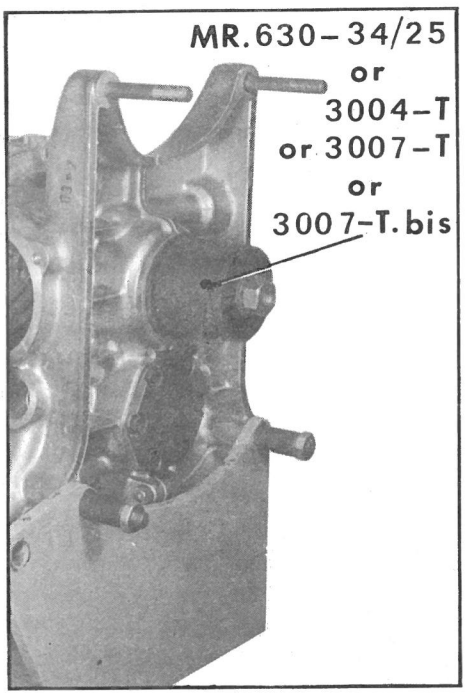

5. Fitting rear sealing bush :

NOTE : The same precautions as for fitting front sealing bush apply.
(See chapter I).

Use the following equipment for fitting :
- MR. 630-34/25 or 300-T, for AZ - AZU - AYA - AYA 2 vehicles
(A 53 - A 79/0 - A 79/1 engines)
- 3004-T, for AYA3 - AK (1968) vehicles *(M 4 engine).*
- 3007-T a for AYB - AY.CA - AZ - AK vehicles
(M 28/1 and M 28 engines).

Oil the inner cone of the apparatus with engine oil.

NOTE : Fit only bushes sold by the Replacement Parts Department.

6. Fit engine flywheel :

NOTE : The securing screws of the flywheel must be renewed at each dismantling.

Tighten screws to between 40 and 45 mAN (4 to 4.5 m.kg).

7. Fit engine :
(See relevant operation).

I. REPLACING A FAN.

4577

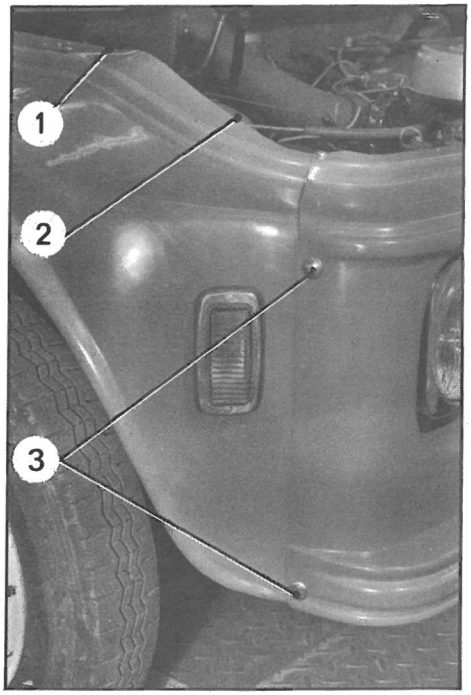

REMOVAL.

AY.CA VEHICLES (Mehari).

1. Remove :
   - grille fixing screws (1), (2) and (3) on front wings,
   - screws « a » fixing front grille bracket onto platform.

2. Free grille bracket and grille assembly, from front wings, by deflecting the latter and placing grille on the wings.

VEHICLES ALL TYPES.

4572



3. **Remove fan protection grille.**

4. *Vehicles equipped with belt-driven alternator or dynamo :*
   Release alternator belt :
   Loosen :
   - alternator or dynamo fixing screw on manifolds,
   - tensioner locking screw.

5142

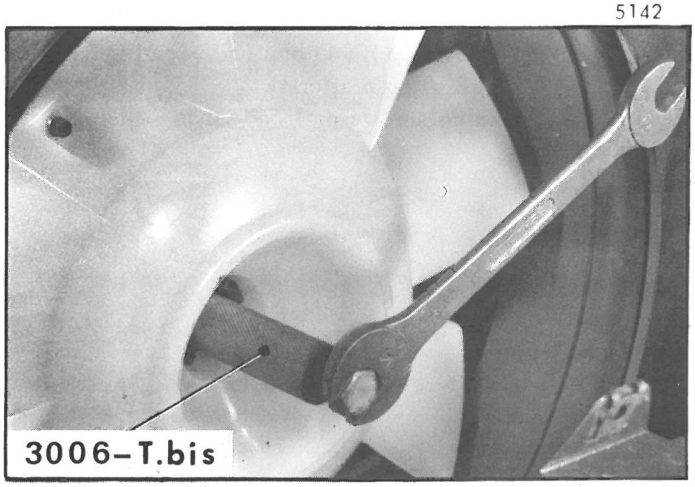

5. **Remove fan :**

   a) Remove fan fixing screw. Immobilize the engine flywheel, using a screwdriver. Give a turn on the starting handle as when starting up the engine.

   b) If the fan does not free itself tighten fixing screw, then unscrew it two turns.
   Fit extractor 3006-T a and extract fan.

   NOTE : Never try to free the fan by blows on the starter dog, as this may bend the end of the crankshaft.

6. Disconnect fan from pulley.

FITTING.

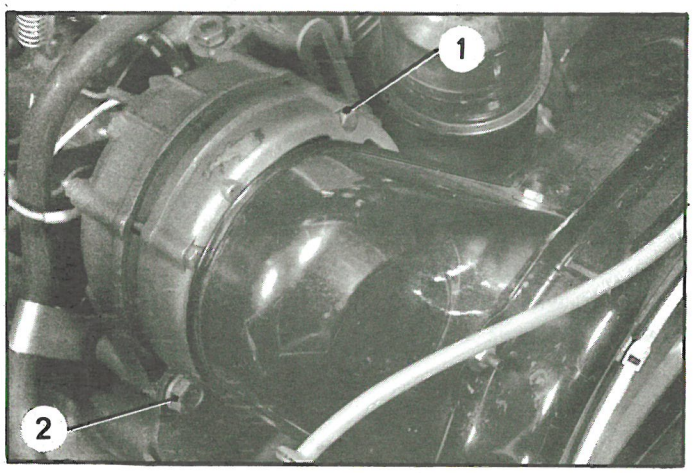

7. Connect fan to pulley and tighten screws to 10 mΛN (1 m.kg).

8. Fit the fan :

a) Turn engine to bring pistons to T.D.C.

b) Fit fan placing belt on pulley *(if applicable)*

c) Position fan so that starting handle is horizontal when fitted.

d) Tighten fixing screw to 50 mΛN (5 m.kg) (shakeproof washer).

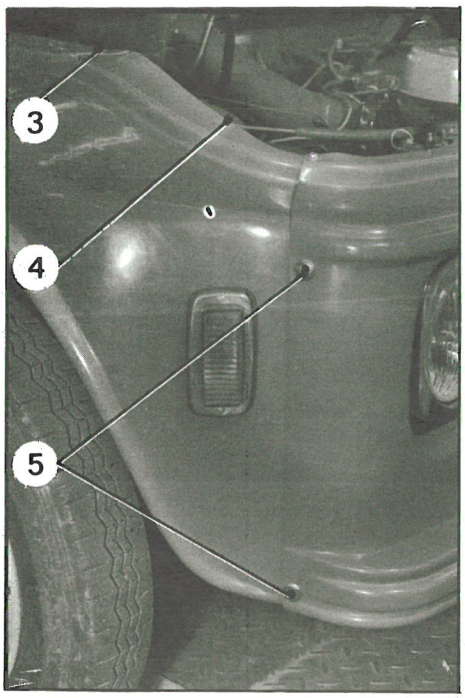

9. *Vehicles equipped with alternator or belt driven dynamo :*

a) Check that drive belt is fitted. Tension belt (moderately).

b) Tighten belt tensioner locking screw (1) and screw (2) securing alternator on manifold.

10. Fit fan protection grille.

11. AY.CA VEHICLE (Mehari) :

Fit :
- fixing screws (3), (4) and (5) securing front grille bracket on platform,
- grille fixing screws on front wings.

II. REPLACING A FAN COWL.

4572



3358

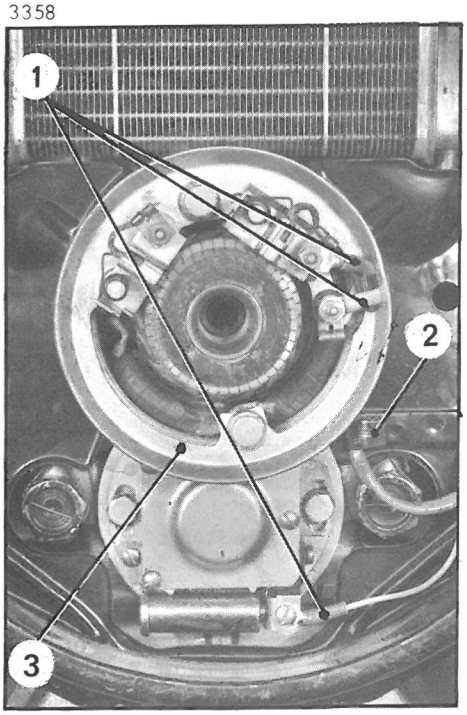

PL.198

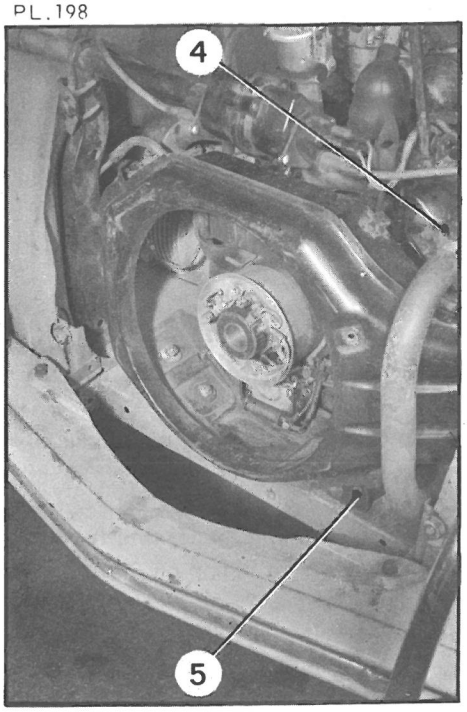

1. « **AZL** » **vehicles and vans :**
Remove the two wings and bonnet side panels.

2. « **Dyane** » **vehicles :**
Remove bumper, finishing panel, grille and grille bracket assembly.

3. **Mehari vehicles :**
Free grille bracket and grille assembly, from front wings by deflecting the latter and place grille on wings.

4. **Remove protection grille.**

5. **Remove fan :**
(See relevant operation).

6. **Vehicles equipped with dynamo at end of crankshaft :**

a) Disconnect dynamo and distributor leads (1). Free the harness from lug (2) on fan cowl.

b) Remove dynamo body - brush holder cover assembly (3).

7. **Engines fitted with early air intake cowl :**

a) Remove half clamps (4) of exhaust pipe on manifold *(if necessary)*.

b) Loosen :
- the nut securing expansion chamber retaining lug (use spanner 1791-T),
- exhaust pipe clamp on expansion chamber or silencer.

c) Swivel expansion chamber or pipe towards exterior of vehicle.

8. Remove the two screws (5) securing front flexible mountings on platform.

2664

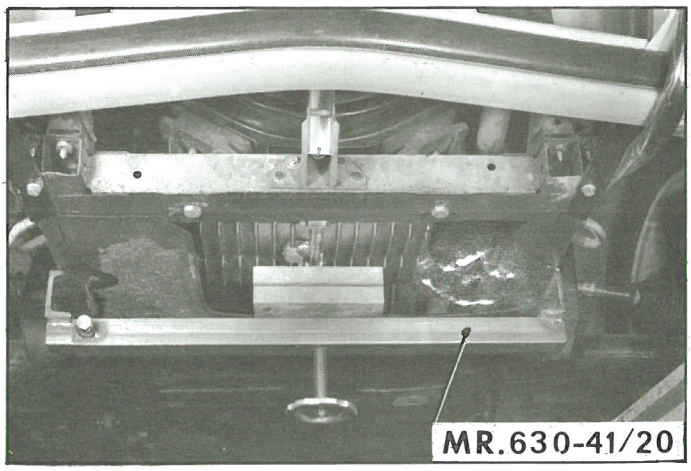

9. Raise engine gearbox assembly using tool MR. 630-41/20. If this is not available, use a jack, placing a wooden wedge between engine crankcase and head of jack.

10. **Remove fan cowl and flexible mountings assembly :**
a) Loosen fan cowl fixing nuts (4) on engine mountings.
b) Remove (according to model) screws (1) and fan cowl fixing screws on cylinder head cooling pipes.
c) Free fan cowl and flexible mountings assembly.
d) Remove flexible mountings.

FITTING.

4164

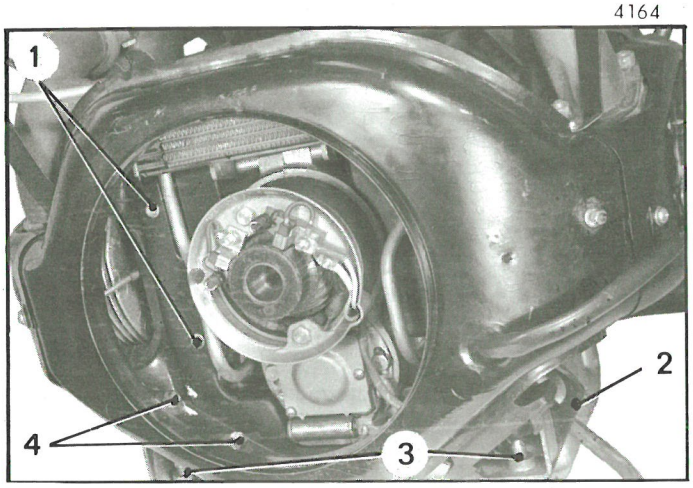

11. Position flexible mountings on fan cowl and screw nuts (4) a few threads.

12. **Fit fan cowl and flexible mountings assembly :**
a) Introduce cowl into cylinder head cooling ducts placing brackets (2) between cowl and the flexible mountings.
b) Tighten (according to model) screws (1) and cowl fixing screws on cylinder head cooling ducts.

13. Lower engine gearbox assembly and remove tool MR. 630-41/20.

PL.403

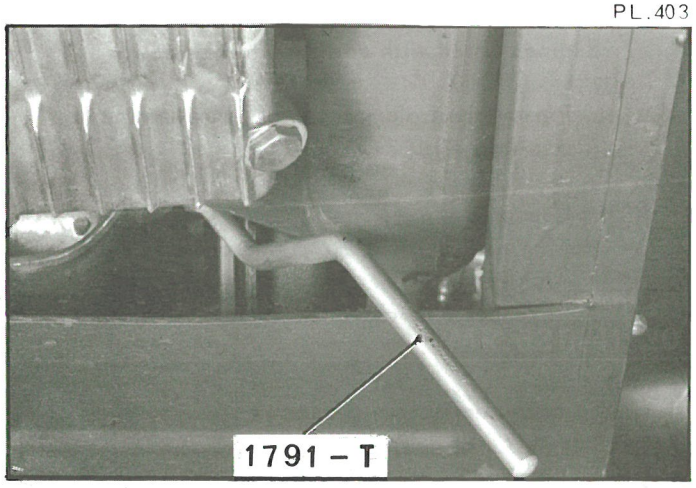

14. Position and tighten to 60 mΛN (6 m.kg) the two screws securing the flexible mountings (3) on platform.
Turn down locking tabs.
Finally tighten nuts (4) to between 20 and 25 mΛN (2 to 2.5 m.kg)

15. **Engine fitted with early air intake cowl :**

a) Tighten :
- expansion chamber fixing lug (spanner 1791-T),
- exhaust pipe clamp on expansion chamber or on silencer.

PL. 198

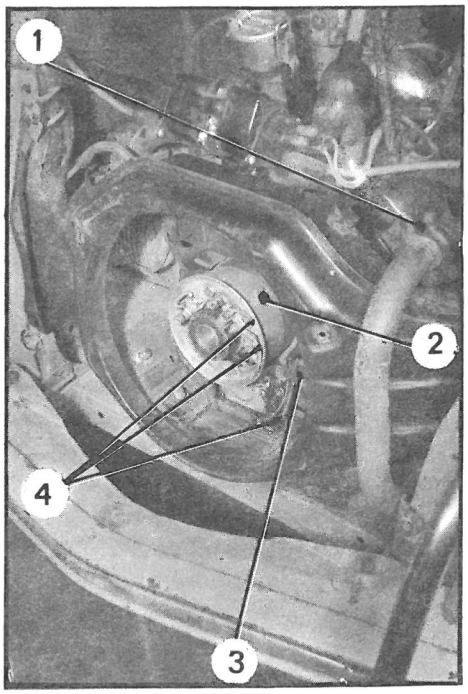

b) Fit exhaust pipe half clamps (1) to manifold (according to model).

16. Vehicles equipped with dynamo at end of crankshaft :

a) Fit dynamo body and brush - holder cover assembly (2).

b) Connect leads (4) to dynamo and distributor.

c) Position harness under lug (3) on fan cowl.

4572

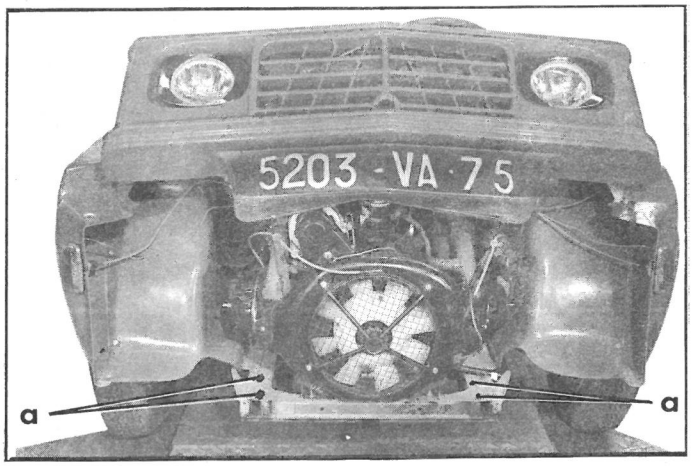

17. Fit the fan :
(See relevant operation).

18. AZL vehicles and vans :

Fit wings and bonnet side panels.

4577

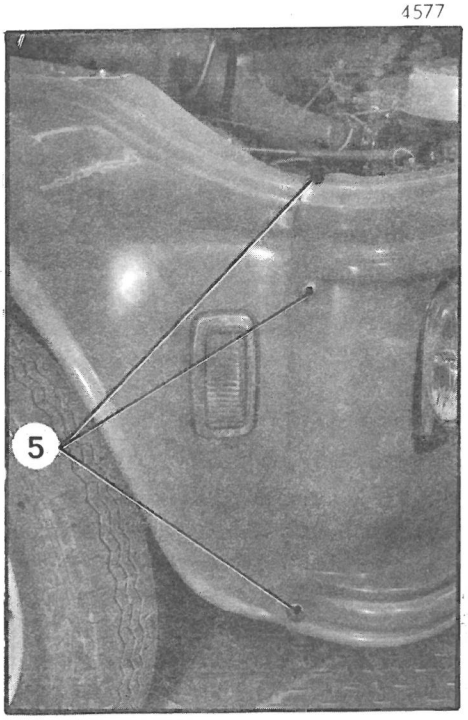

19. Dyane vehicles :

Fit bumper, finishing panel, grille and finishing panel bracket assembly.

20. Mehari vehicles :

Fit :
- screws at « a » fixing front bracket of grille onto platform,
- screws (5) fixing grille onto front wings.

ADJUSTING THE POSITION OF THE CENTRIFUGAL CLUTCH DRUM

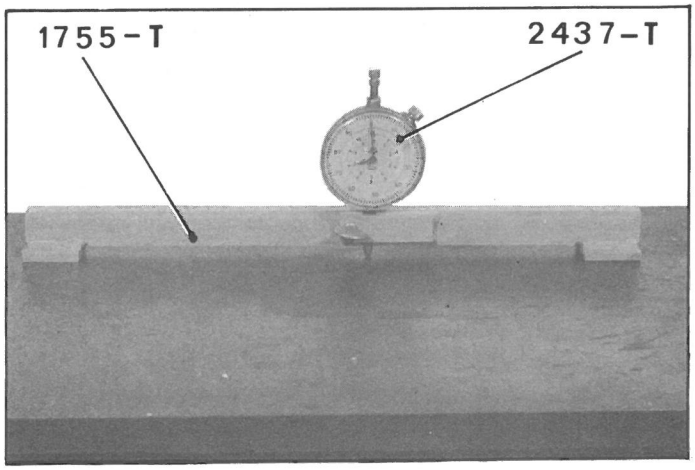

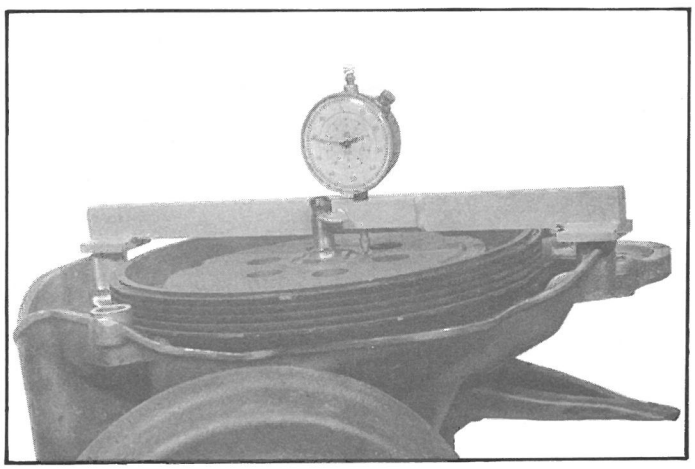

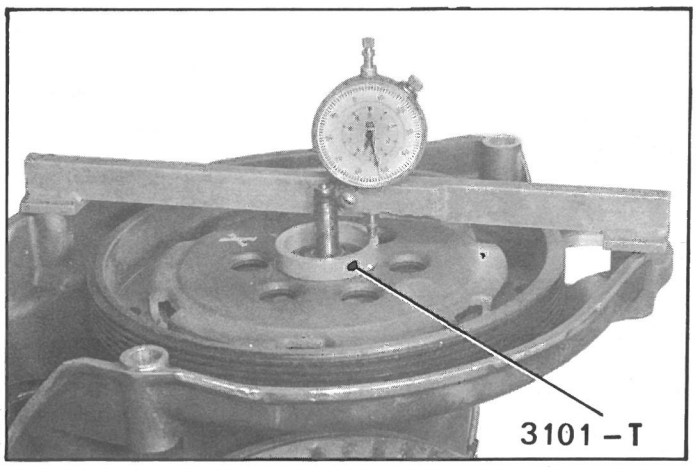

NOTE : This operation must be carried out each time a main shaft, a gearbox casing or a centrifugal clutch drum is replaced.

AZL 2 CV vehicles and Saloon all types equipped with a non-pendent pedal gear and fitted with graphite clutch thrust ring :

Use a straight edge 1755-T fitted with a dial gauge 2437-T.

2 CV Saloons or 3 CV all types vehicles, with gear change lever mounted in centre of cover.

Use straight edge 1755-T, fitted with a dial gauge 2437-T and standard gauge-bush 3101-T.

1. Check position of clutch drum :

a) Set dial gauge, placing straight edge 1755-T on a face plate.

b) Position provisionally an adjusting distance piece (2), having a known thickness (e.g. 3.1 mm) on main shaft.

c) Position clutch drum (1) without disc or mechanism, and temporarily tighten nut (3).

d) If necessary, place standard gauge-bush 3101-T on clutch drum bearing boss.

e) Place straight edge 1755-T on the two thrust bosses of the clutch housing.

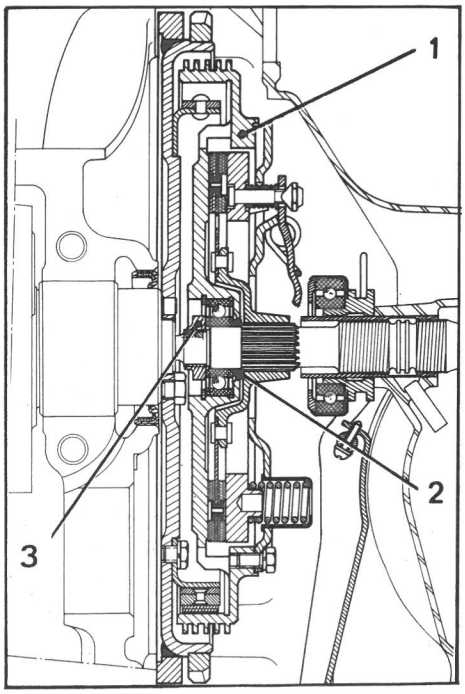

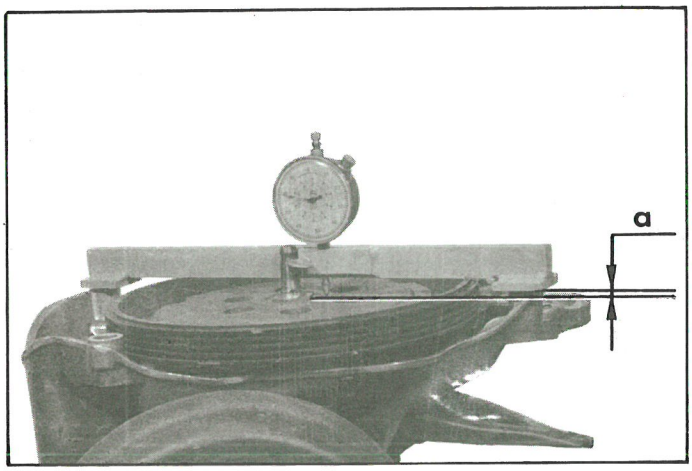

f) Measure the distance « a » between the clutch housing thrust face and **the clutch drum bearing boss or the outer face of the standard gauge-bush 3101-T.**

This measurement « a » must be between 5.12 and 5.42 mm.

Alter the size of the provisionally fitted distance piece (2) until this reading is obtained.

NOTE : Distance pieces of thickness from 2.5 to 4 mm, by steps of 0.3 mm are sold by the Replacement Parts Department.

g) Remove nut (3) and drum (1) from provisional distance piece (2).

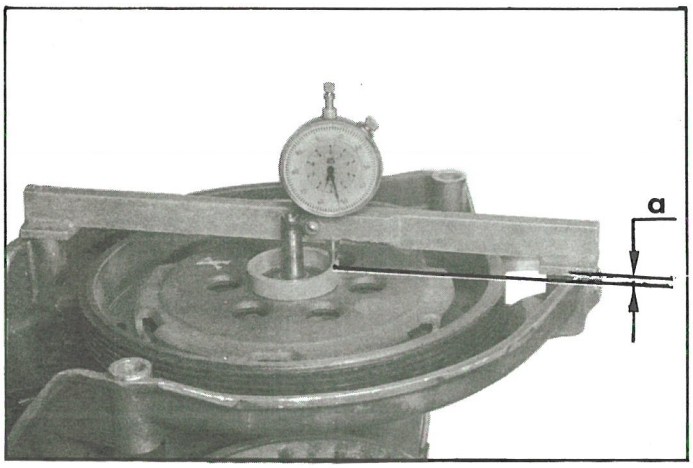

2. Fit clutch drum :

a) Place spacer (2) selected by above procedure, against bearing stick with grease.

b) Fit clutch disc, and centre with mandrel (MR. 630-31/10 or 1713-T).

c) Fit mechanism, tighten screws 10 to 13 mΛN (1 to 1.3 mkg).

d) Fit clutch drum on control shaft. Tighten nut (3) (left hand thread) to 30 - 40 mΛN (3 to 4 m.kg).

Turn over the locking metal on nut (at « b ») Support nut so as to avoid damaging shaftway in clutch housing.

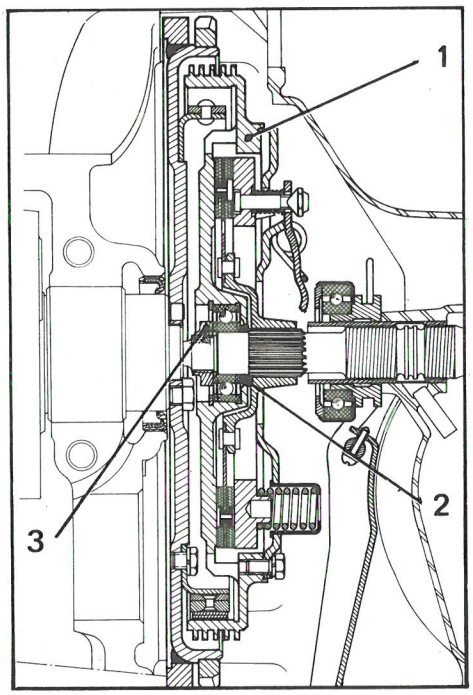

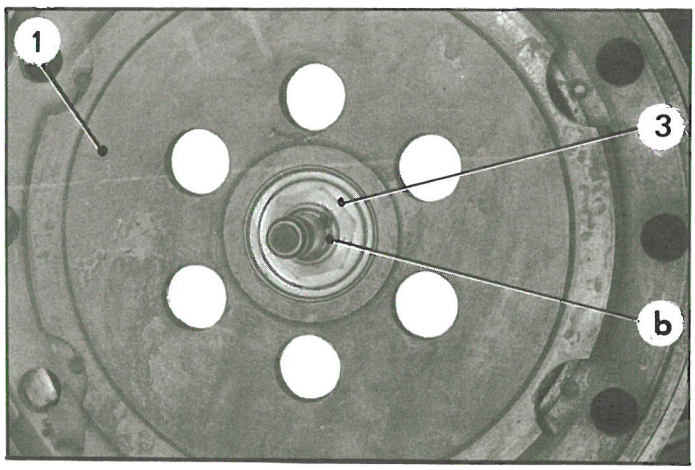

REMOVING AND FITTING A GEARBOX COVER

(With the operating lever on the centre)

10836

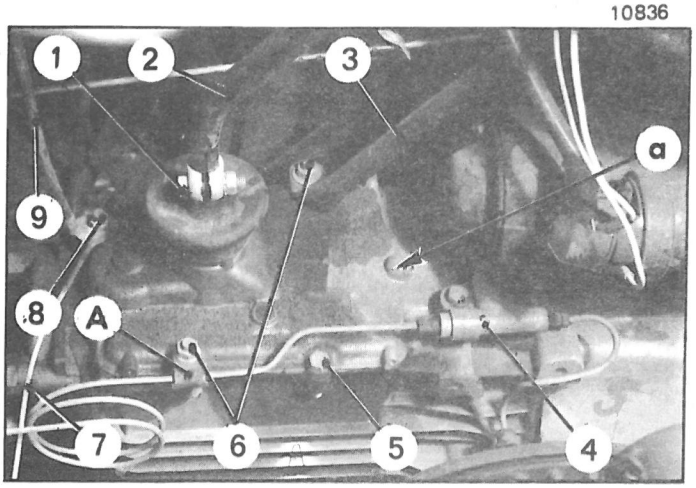

3690

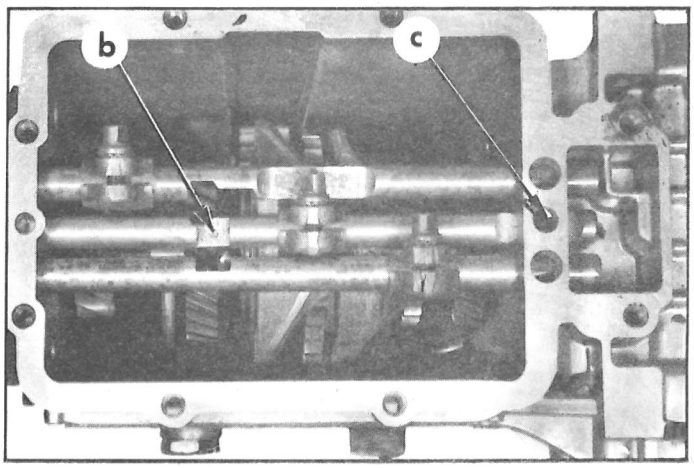

REMOVAL.

1. Remove the spare wheel (if necessary).
2. Remove securing lug (3) of the air filter and bracket **A** of the brake feed pipe.
3. Remove bolt (1) and uncouple link (2) from the gearbox operating lever.
4. Remove bolts (5) securing the gearbox cover, release earth cables (9) and (7) of the battery and the regulator.
5. When removing the cover, make sure that the locking spring of the 2nd-3rd gear shaft remains in its housing « c » in the gearbox casing.
6. Release the locking spring and clean the seating surface.

FITTING.

7. Make sure that the gearbox lever is in neutral.
8. Coat the seating surfaces with MASTI-JOINT HD 37 or with CURTYLON.
9. Fit the locking spring of the 2nd-3rd gear shaft in its housing « c » in the gearbox casing.
10. **Fit the cover :**
    Insert the locking spring in the cover housing at « a ».
    Make sure that the end of the shaft operating lever can be correctly fitted in notch « b » on the fork shaft controlling the 2nd-3rd gear.
11. **Fit the bolts fixing the cover :**
    Fit bolts (5) and extended head screws (6) and (8) (serrated washer).
    Place a spacer between the cover and three way union (4).
    Tighten all the bolts.
    Couple earth cables (7) and (9) to extended head screw (8) and tighten the nut (serrated washer).
    Fit lug (3) securing the air filter and bracket **A** of the brake feed pipe.
    Tighten the nuts (serrated washer).
12. Couple link (2) to the gearbox operating lever.
    Tighten bolt (1).
13. Check the gear-change.
14. Fit the spare wheel (if necessary).

REMOVING AND FITTING A FRONT AXLE STEERING ASSEMBLY

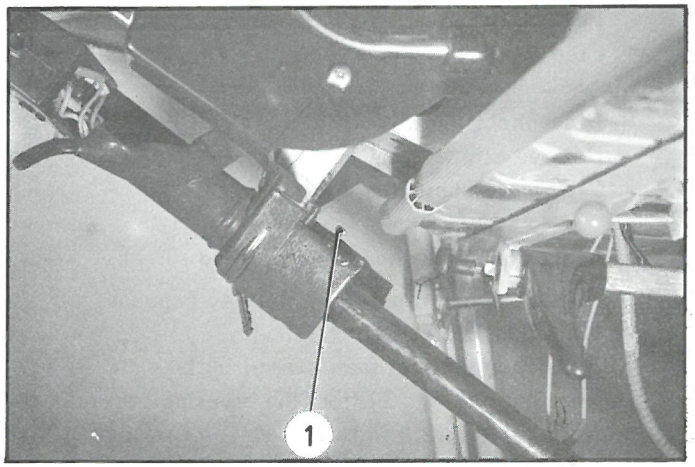

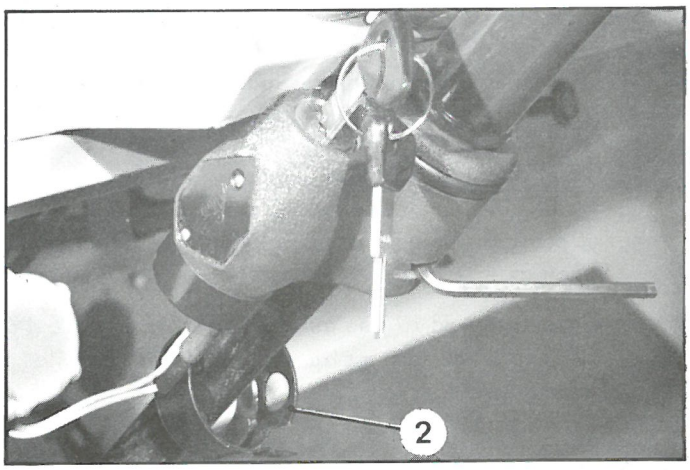

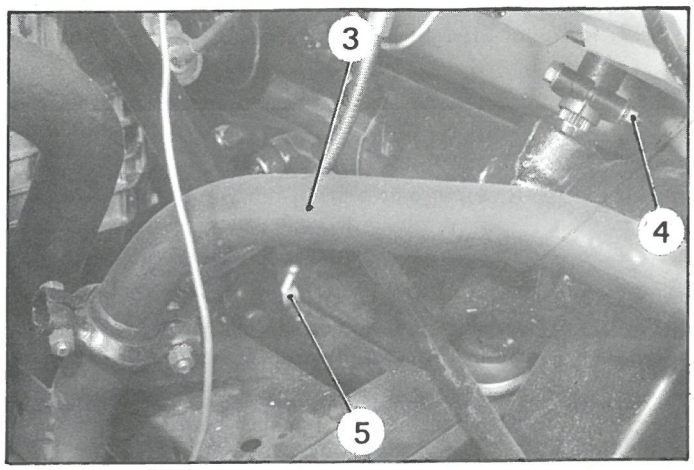

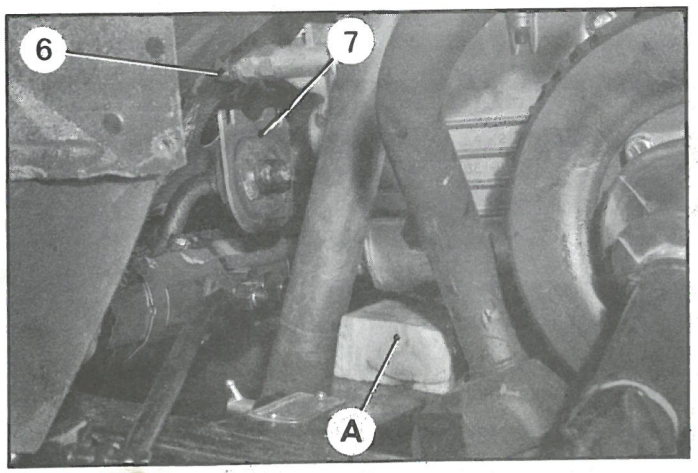

REMOVAL

1. Disconnect lead from negative terminal of battery.

2. Remove bonnet, side panels, wheel arches and the two front wings *(Vehicles all types except Mehari).*

3. **Disconnect steering column.**

   a) *Vehicles equipped with anti theft device :*
   Remove screw (1).
   Free protective collar (2).
   Set anti theft switch in « unlocked » position.
   Unscrew locking bush assembly screws (5mm Allen key), then proceed as shown below.

   b) *Vehicles not equipped with anti theft device :*

   Remove screw (4) and free steering column from the rack pinion (if necessary, use lever 1951-T or lever MR. 630-27/6).

4. Remove *(according to model)* the exhaust pipe (3) connecting the expansion chamber to silencer.

5. Loosen the two handbrake cable adjusting wing nuts (5).

6. Unscrew the screws (6) fixing gearbox on rear flexible mounting and raise gearbox in order to free the screws (6) of rear mounting (7).

   Place wooden chock A (35 mm thick) between gearbox and platform crossmember.

7. Chock the rear wheels of the vehicle.
   Raise the front and place it on stands.
   Remove the front wheels.

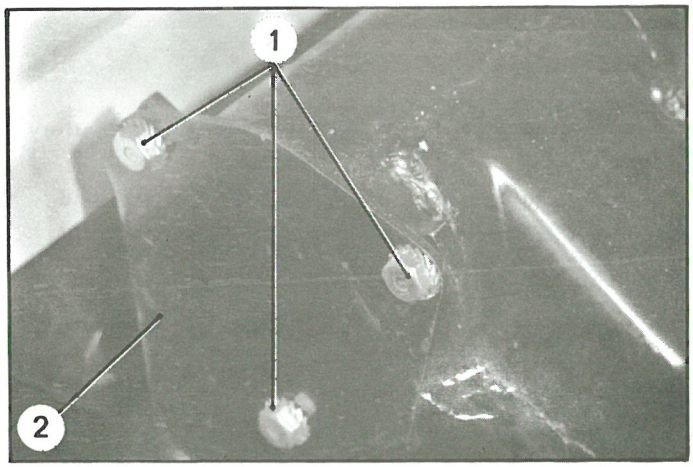

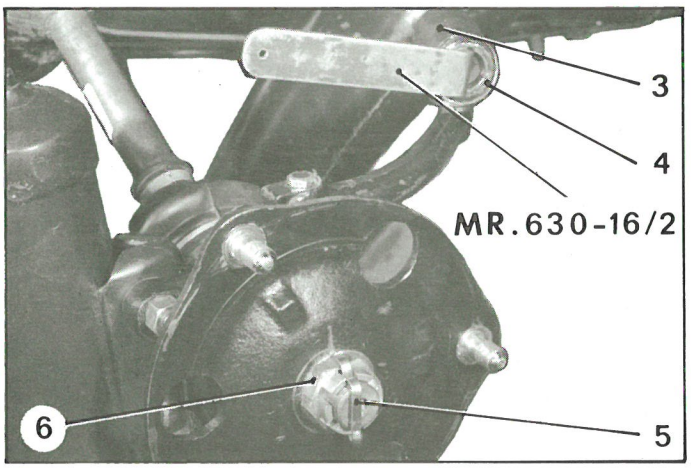

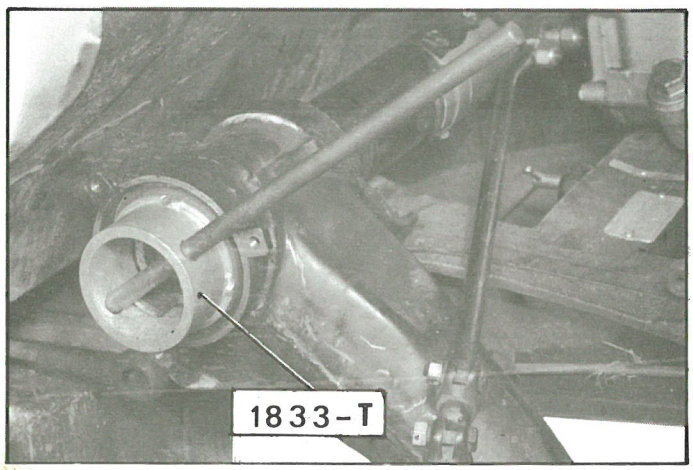

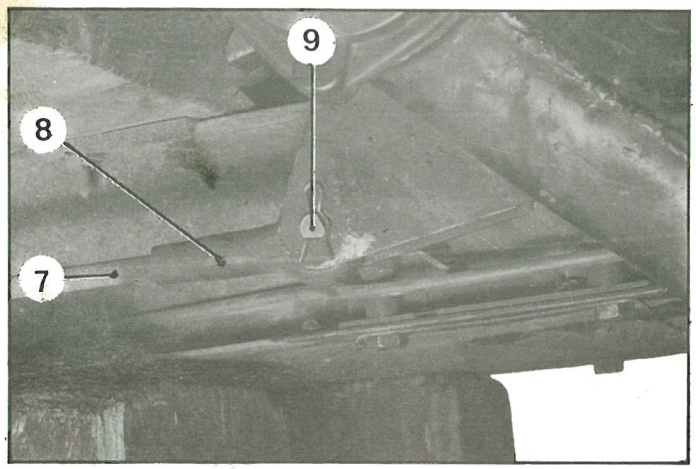

8. Remove front shock absorber brackets :
(for vehicles thus equipped)

Remove fixing screws (1).
Free bracket (2) downwards.

9. Disconnect the drive shafts :
Remove clip (5) and nut (6).
Free drive shaft from hub.

10. Disconnect right-hand steering rod :

Remove locking pin, then nut (4) (spanner MR. 630-16/ 2).
Remove outer seat from swivel ball.
Free dust cover (3) from the steering lever.
Turn hub to bring flats on ball joint in line with slot in steering rod.
Free steering rod.

11. Disconnect suspension tie-rods :

Mark with paint, position of end-piece (8) on tie-rod (7).

NOTE : This mark serves as a rough indication of position; heights of vehicle must be adjusted when axle is fitted.

Loosen tie-rod (7) so as to free the knife-edge (9).
Remove inner spring clip and withdraw the knife-edge outwards.
Free tie-rod towards the rear.

12. Removal of right-hand axle arm :

a) *Vehicles fitted with front shock absorbers :*

Remove pin and slotted nut (use spanner 1833-T).

b) *Vehicles equipped with friction damper units :*

Loosen clamp, then free dust cover.
Remove casing protecting friction disc.
Remove friction damper and sealing cup.
Remove pin and slotted nut (use spanner 1833-T).

c) Free drive shaft and axle arm assembly from crossmember, by tapping behind the arm with a mallet, if necessary.

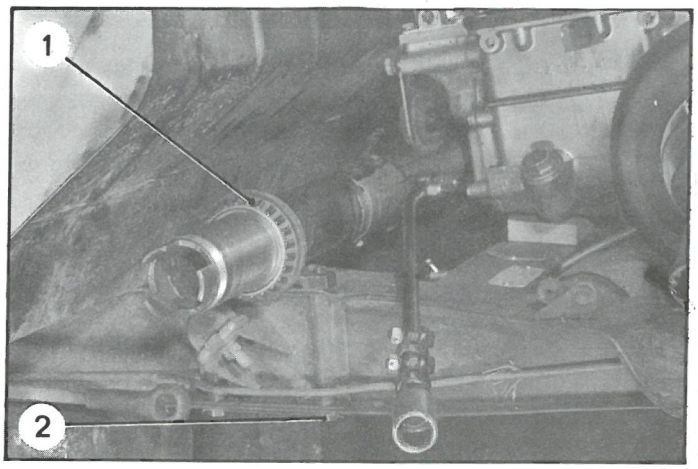

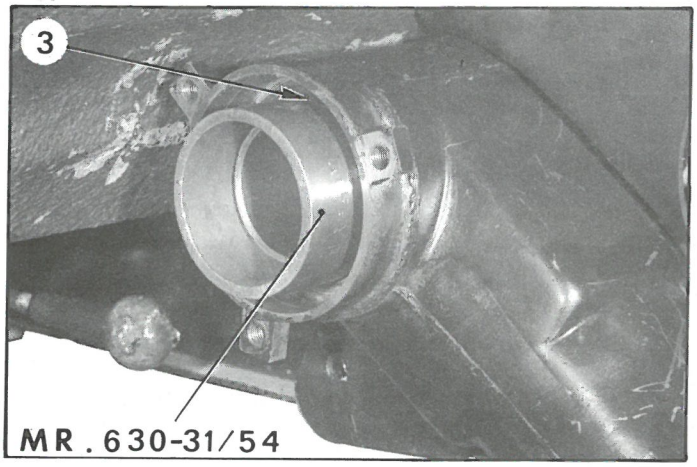

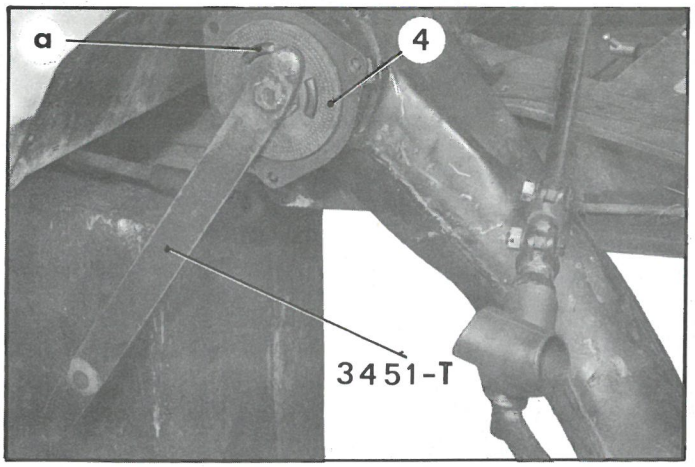

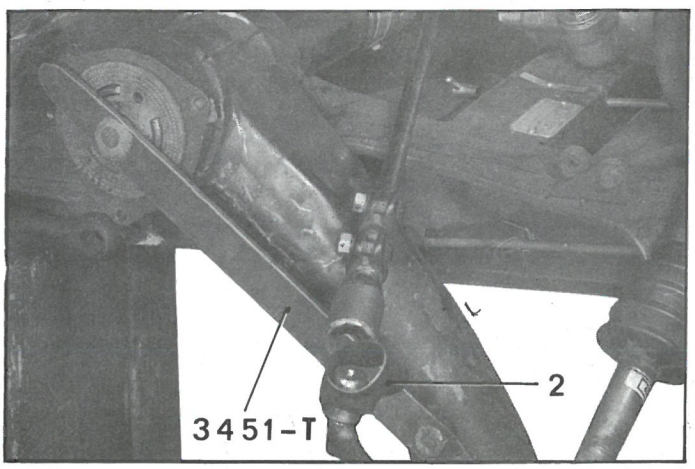

13. Remove crossmember and left arm assembly :

Remove the four crossmember fixing screws (2). Free, from left-hand side, crossmember and left arm assembly.

FITTING

14. Fitting front axle-steering-left arm assembly :

a) From left-hand side of vehicle offer up front axle assembly on platform.

b) Check that crossmember centring dowels are correctly engaged in platform holes.

c) Secure the axle :
Insert a lock washer under screw heads (2). Tighten screws to 50 mΛN (5 m.kg) and knock over the locking tabs.

15. Fitting right-hand axle arm :

a) Grease inner and outer bearings (1) and (3) (TOTAL MULTIS).

b) Offer up the arm on axle crossmember.

c) Fit outer bearing, using tube MR. 630-31/54.

d) Screw up and tighten castle nut to 50 mΛN (5 m.kg) (spanner 1833-T). The arm must turn smoothly, without any hard spots.

e) Split pin the nut and open the split pin in bore of crossmember.

16. *Vehicles fitted with friction damper units :*

a) Position damper (4) complete with inner sealing cup on tenons « a » of axle crossmember.

b) Using spanner 3451-T, set slots in friction damper hub opposite tenons, and complete positioning of friction damper on tenons.

c) Using the other end of spanner 3451-T, make fixing holes on damper flange and sealing cup, coincide with tappered holes in hub of axle arm.

d) Fit protecting casing and tighten fixing screws.

e) Fit dust cover and tighten clamp.

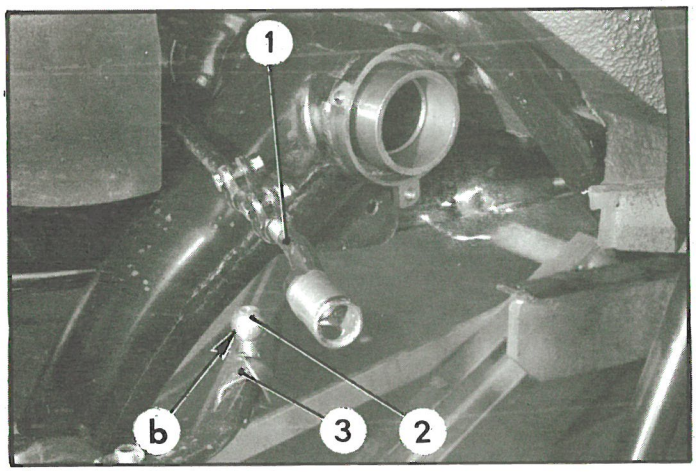

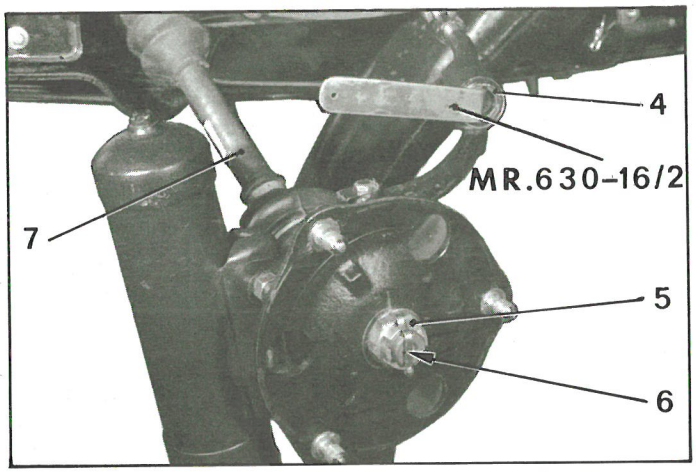

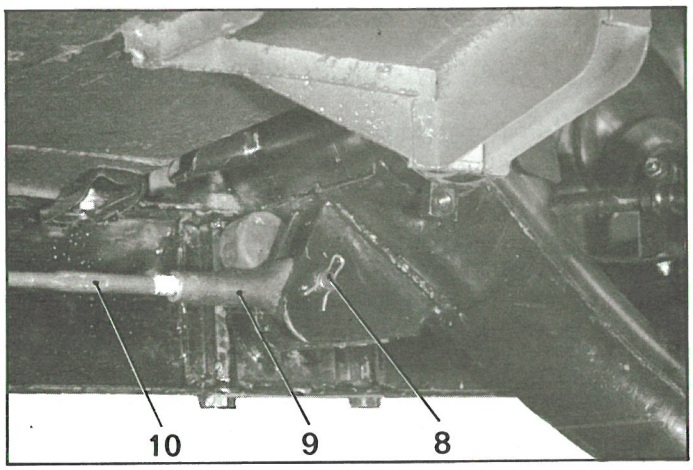

17. Connecting right-hand steering rod :

a) Grease ball socket, ball, and seatings with universal joint grease.

b) Position ball joint (2) so that flats « b » are parallel to steering rod (1). Fit ball into slot in rod.

c) Slide dust cover (3) over rod end-piece.

d) Fit ball seating. Fit and screw down tight nut (4), then loosen it 1/6th of a turn (spanner MR. 630-16/2).
Fit clip.

18. Connecting drive shaft units :

a) Grease drive shaft splines (7) with universal joint grease and insert it in the hub.

b) Oil face of nut (5).
Holding hub with a bar of lever MR. 630-64/40 tighten nut to 350 - 400 mΛN (35 to 40 m.kg)
Fit clip (6).

19. Connecting suspension tie-rods :

a) Offer up end-piece (9) in arm clevis.

b) Grease knife-edge (8) with TOTAL MULTIS MS and place it in position with its outer spring clip stop.
Fit inner spring clip stop.

c) Screw tie-rod (10) into end-piece as far as paint mark made when disconnecting the tie-rods (See paragraph 11).

d) Ensure that rubber dust cover is correctly positioned on adjusting end-piece of suspension cylinder.

20. *Vehicles equipped with hydraulic shock absorbers :*

Connect front shock absorber brackets.

NOTE : To facilitate fitting the screws and avoid straining shock absorber silentblocs, loosen shock absorber fixing nuts.

Effect sealing of crossmember, by applying MASTI-JOINT on thrust faces.

Tighten fixing screws to 40 mΛN (4 m.kg).

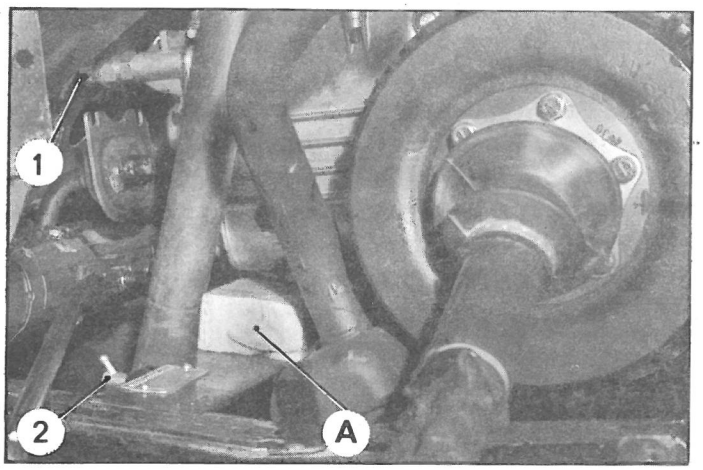

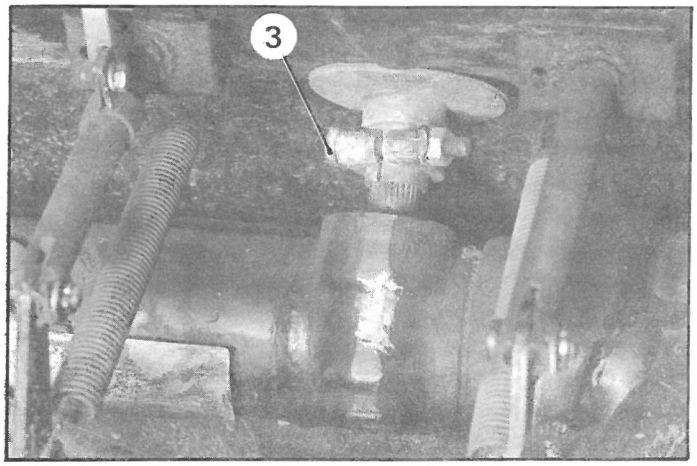

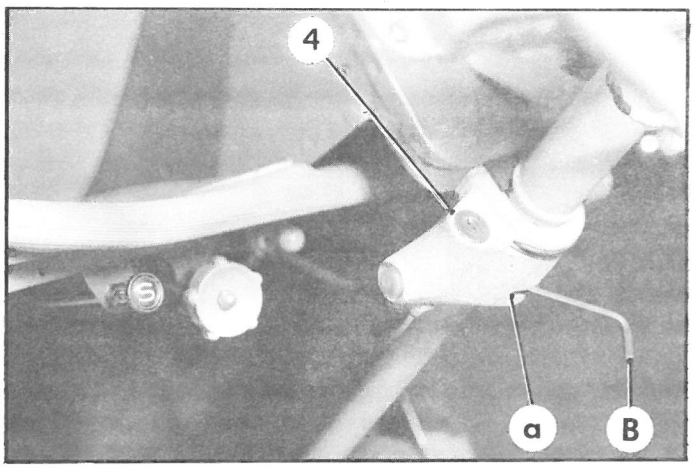

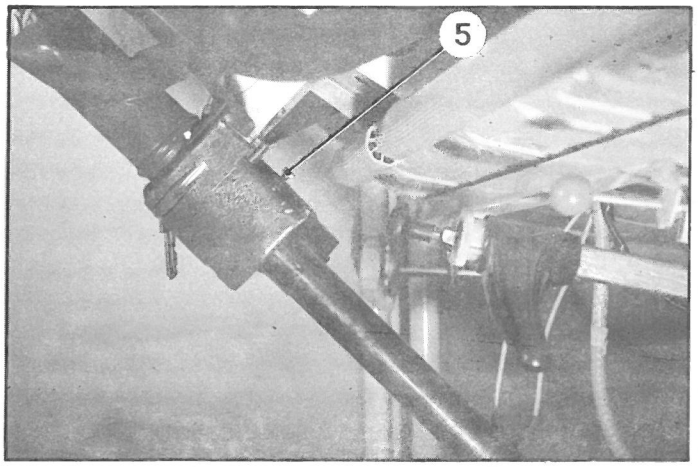

21. Fit *(according to model)* silencer expansion chamber connection pipe.

22. **Fix the gearbox on rear mounting :**

a) Remove wooden chock A positioned between gearbox and platform (See paragraph 6).

b) Tighten fixing screws (1).

23. Fit the wheels.

24. **Adjust handbrake cables :**

Adjust the tension of each of the two brake cables in succession, by means of wing nuts (2) wheels should rotate stiffly when handbrake is pulled up to third notch and be locked at fifth notch.

25. **Connecting the steering :**

a) Bring the vehicle to « straight line ahead » position (mark on protection plate of slides on ball guide).

b) Position steering wheel so that base of the spokes is on a horizontal line within about 10° downwards, then fit steering column on rack pinion.
Tighten screw (3). Bend down locking tabs.

26. **Adjust (according to model) anti-theft locking bush :**

a) Position bush flush with housing (4).
Tighten alternately half bush assembly screws until bush grips tube lightly, but can still slide.

b) Set wheels as for driving in straight line.
Position hole of bush opposite locking finger, and slide bush inside housing.
Lock anti-theft device.

c) Unlock and turn steering wheel to bring heads of bush assembly screws opposite slit « a » in housing.
Tighten screws alternately (5 mm Allen B key).

d) Position protective sheath and tighten screw (5).

27. Fit wings and bonnet side panels (if necessary).

28. Check tyre pressure.

29. Check front and rear heights and adjust if necessary (end piece 3455-T or 3455-T.A and spanner 3456-T).

30. Tighten shock absorber fixing screws to 35 to 40 mAN (3.5 to 4 m.kg).

31. Adjust front axle (alignment and steering lock).

32. Connect earth lead to negative terminal of battery.

I. REMOVING AND FITTING A FRONT HUB OR FRONT HUB BEARING

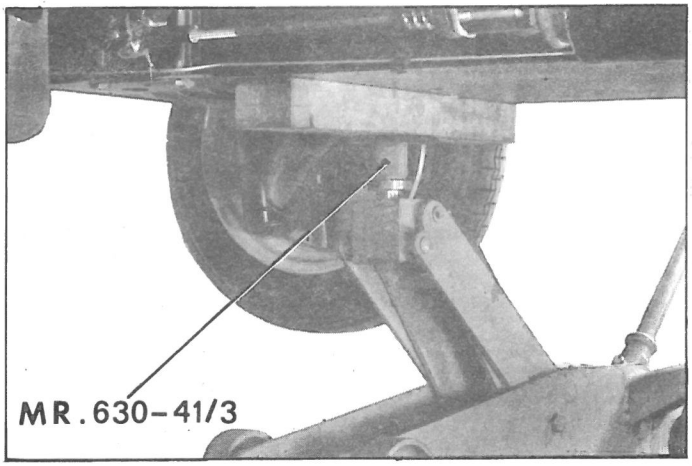

REMOVAL

1. Raise vehicle (support MR. 630-41/3 placed on roller jack).
   Place chocks under chassis, at height of axle crossmember.
   Remove wheel on side where hub is to be removed.

2. **Remove drive shaft unit :**
   (see relevant operation).

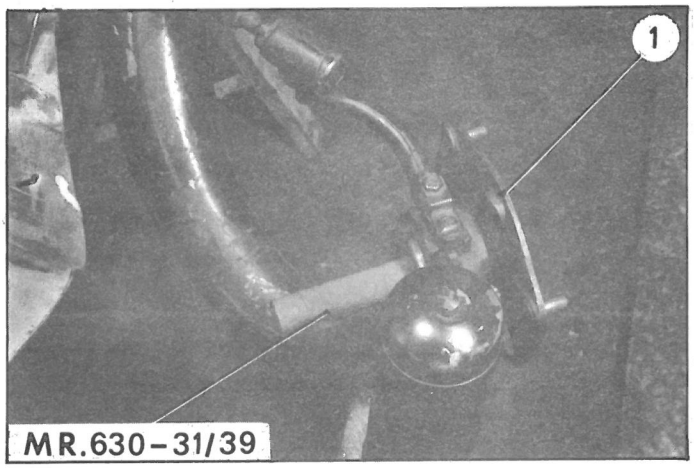

3. **Remove hub :**

   Chock under axle arm.
   Drive off hub (1) from the pivot with aid of mandrel. MR. 630-31/39.

4. **Remove bearing :**

   a) With drill 4 mm diameter, drill out the punch marks which lock bush nut.

   b) Remove bush nut : use the central extension piece of tool 3301-T (or 3321-T) and spanner 3303-T or 3304-T.

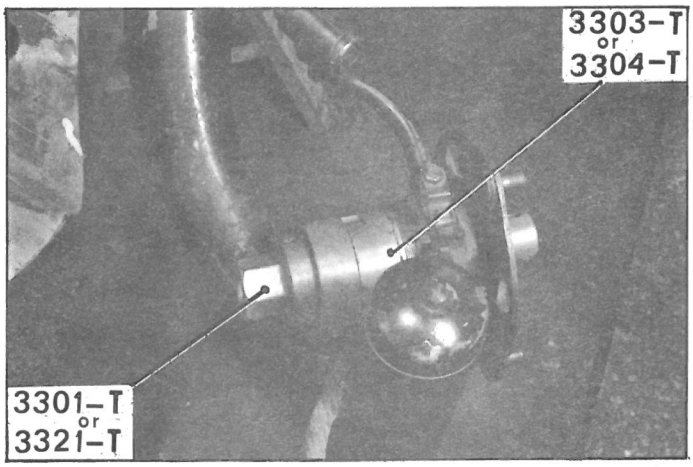

   c) Drive out bearing from pivot bore if necessary using copper drift.

   NOTE : Inner bearing race may remain on hub end.

   Extract this race with extractor 1813-T or universal puller with separator 2405-T.

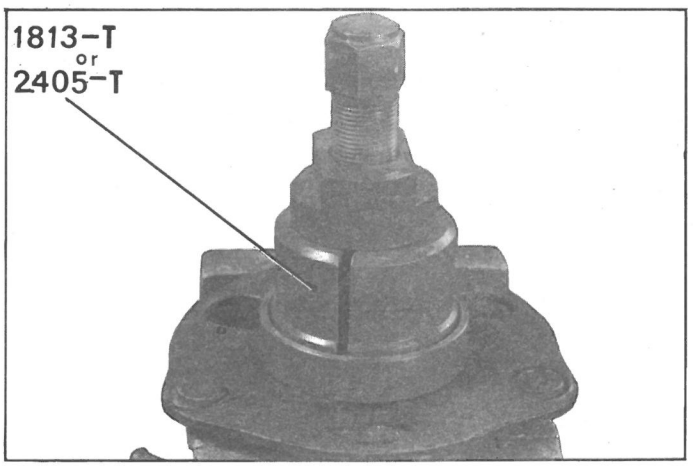

5. Remove sealing bushes.
   Drive out sealing bushes from pivot and bush-nut.

6. Clean parts.

FITTING

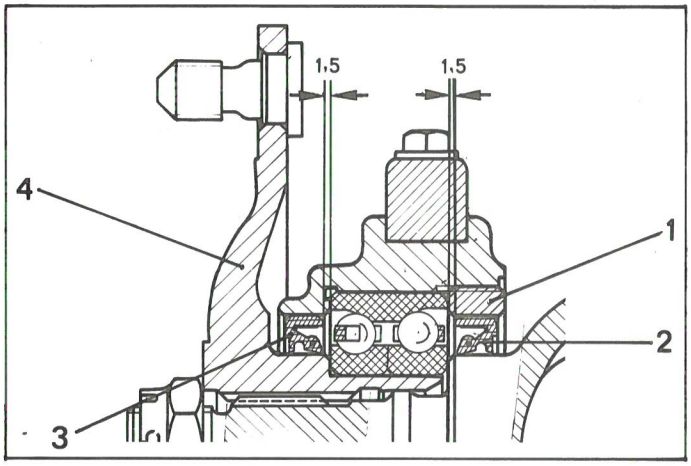

7. Fitting sealing bushes :

a) Position sealing bush (2) in bush nut (1) with lips of seal towards bearing.
The seal must stand down 1.5 mm below the bearing shoulder of the bearing.

b) Position sealing bush (3) in hub bore. This bush should also stand down 1.5 mm below the bearing shoulder of the bearing.
Use mandrel MR. 630-31/55 for fitting both bushes.

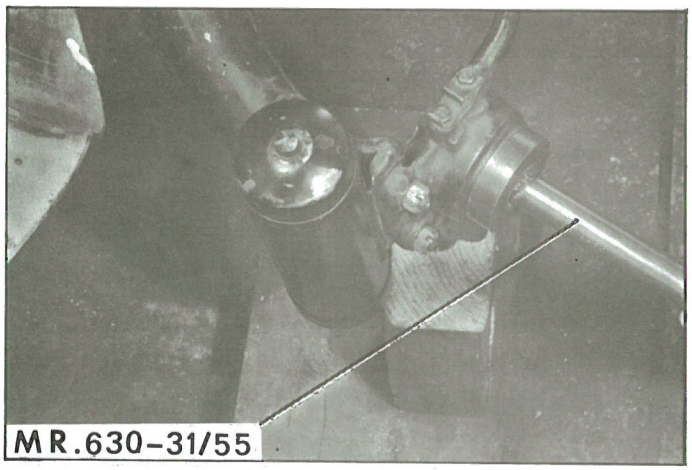

8. Fit hub bearing :

a) Grease bearing (TOTAL MULTIS) and fit into pivot bore using a tube which bears against the outer race of hub bearing.
(Diameter of tube 70 mm, length 100 mm).

b) Screw up and tighten bush-nut (1) to between 350 and 400 mN (35 to 40 m.kg).
Use central extension piece of tool 3321-T or 3301-T (without the outer guide) and with end piece 3303-T or 3304-T.
Lock bush with two punch marks.

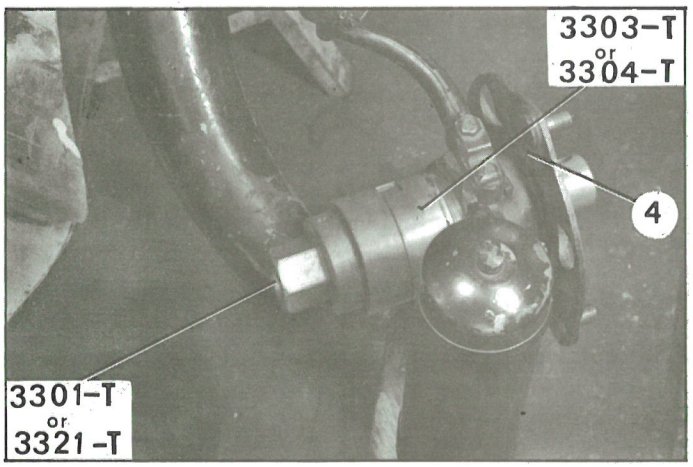

9. Fit hub :

a) Position hub (4) in bearing (use plastic hammer or mallet).

b) Remove chock from under arm.

10. Fit drive shaft :

(See relevant operation).

11. Fit wheel. Lower vehicle to ground (support MR. 630-41/3 on roller jack) and tighten wheel nuts.

II. REMOVING AND FITTING A PIVOT OR KINGPIN

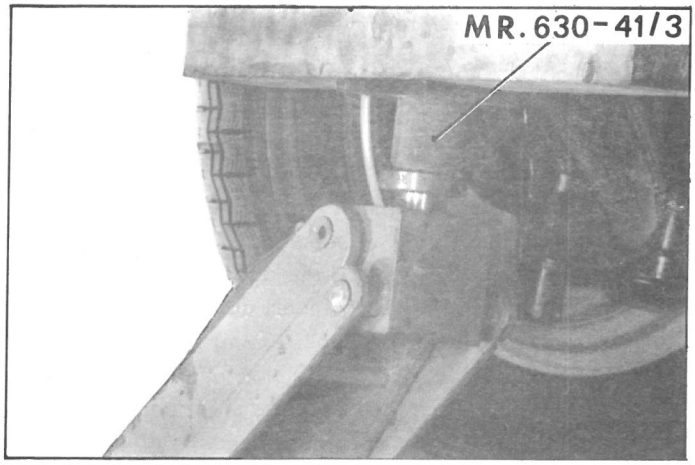

REMOVAL

1. Raise vehicle (support MR. 630-41/3 set on roller jack). Chock under chassis at height of axle crossmember.
   Remove wheel.

2. **Remove drive shaft :**
   (See relevant operation).

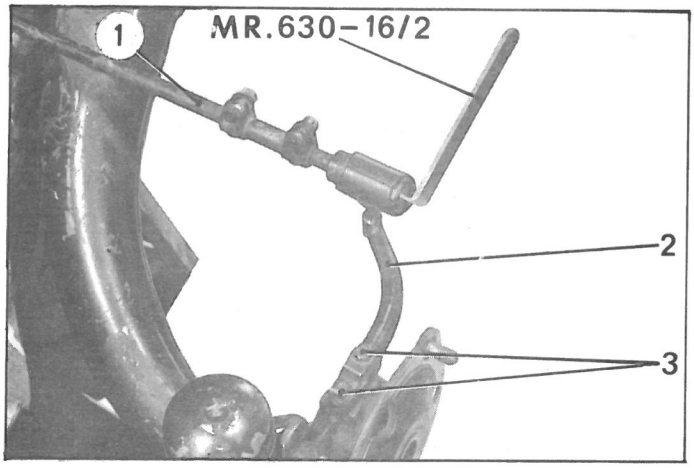

3. **Remove inertia damper.**

4. Disconnect steering rod (1) from pivot lever (spanner MR. 630-16/2).

5. **Removing pivot :**

   a) With a screwdriver, loosen lower pivot plug and remove it.

   b) Drive out expanding plug with a drift 7 mm in diameter and 200 mm length.

   c) Remove kingpin with fixture 1858-T or MR. 630-22/14.

   NOTE : In some cases the kingpin can only be removed with a press, which necessitates removal of arm *(See relevant operation).*

   d) Free pivot and frction washer, dust protector and thrust washers.

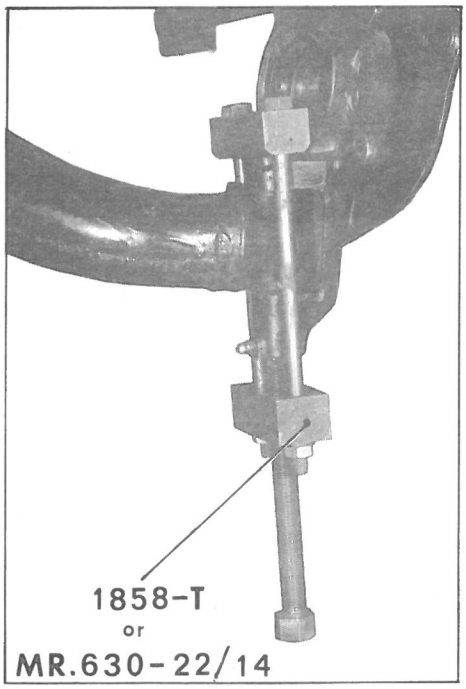

6. **Strip pivot (if necessary) :**
   Remove hub and strip it *(See relevant operation).*
   Free and remove fixing screws (3).
   Remove pivot lever (2).
   Clean parts.

FITTING

7. **Assemble pivot (if necessary) :**

   (See relevant operation).

   Fit pivot lever (2) on pivot. Tighten screws (1) to 15 - 20 mΛN (1.5 to 2 m.kg).

   Turn down locking tabs.

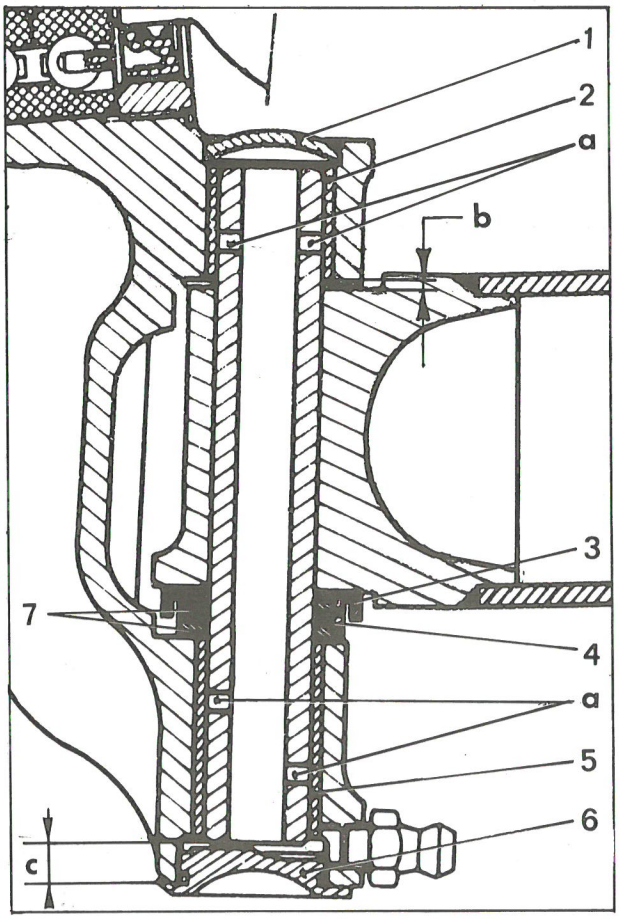

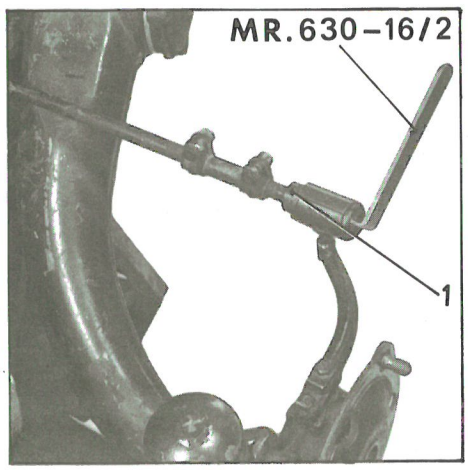

8. Fitting the pivot :

NOTE : Replace upper and lower bushes (2) and (5) if these are oval or worn.

a) Prepare a slave pivot pin with tapered end, 150 mm in length, and 16.5 mm in diameter.

b) Position in dust cover (3) :
- a thrust washer (7),
- the friction washer (4),
- another thrust washer (7).

c) Offer up the pivot on the arm. Between arm and pivot, at lower part, insert dust cover and washers assembly, positioning them by means of the slave pin.

d) Measure clearance between pivot and arm at « b » with a set of feeler gauges : clearance must be between 0.1 and 0.4 mm, Obtain this clearance by selecting the appropriate washers from the range sold by our Replacement Parts Department.

e) Clean kingpin thoroughly with trichlorethylene Remove the inspection marks with a stone. Oil upper and lower pivot bushes. Oil and fit kingpin, starting with brass hammer, then use fixture 1858-T or MR. 630-22/14.

IMPORTANT : Position holes « a » in pin as shown in diagram opposite.
Lower part of pin should be recessed into lower part of pivot by :

« c » = 7.10 to 7.25 mm

f) Pack pivot and spaces between pin, expanding plug (1) and lower plug (6) with TOTAL MULTIS grease. Tighten plug (6) using a screwdriver. Fold over flange on pivot body.
Position expanding plug (1).
Flatten it with a hammer to lock it. Turn down the metal of the pivot at four points with the aid of a chisel in order to lock expanding plug in position.

g) If a replacement pivot has been fitted, fit grease nipple.

9. Fit the inertia damper.

10. Connect steering rod to pivot lever. (spanner MR. 630-16/2).

11. Fit drive shaft :
(See relevant operation).

12. Adjust alignment and steering lock of front wheels.

13. Grease pivot (TOTAL MULTIS).

REMOVING AND FITTING A REAR ARM

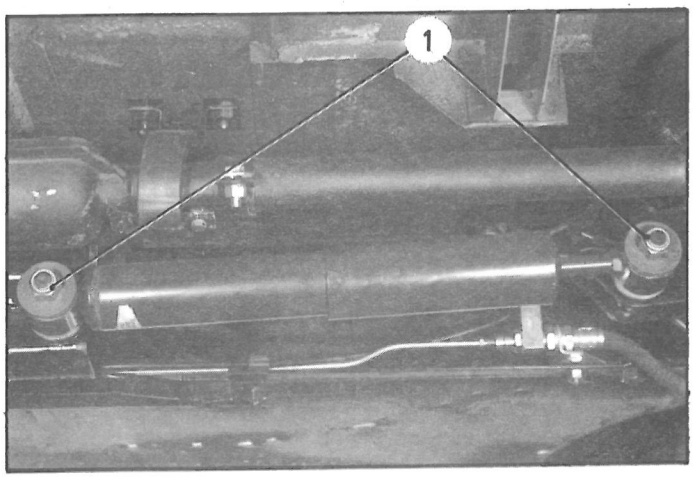

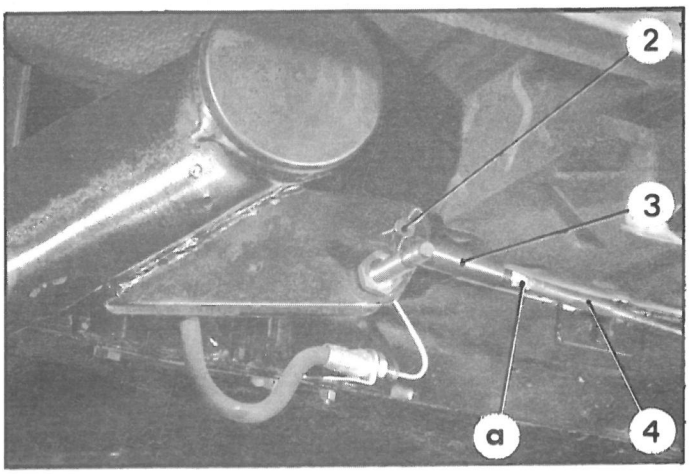

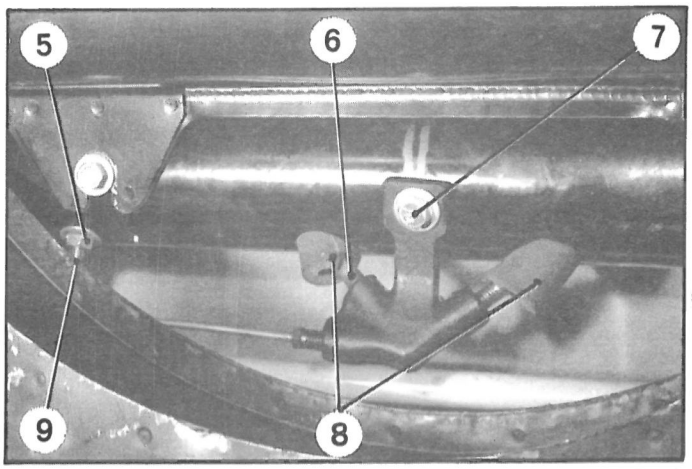

REMOVAL

1. Chock the vehicle, with wheels free at height of rear suspension unit brackets.
   Remove wheel on side on which work is to be carried out.

2. **Remove rear shock absorber on side on which arm is to be removed :**

   Remove the nuts (1) securing the shock absorber and free it.

3. **Disconnect the suspension tie-rod from the arm ;**

   NOTE : In order to avoid the re-adjustment of the heights and distribution of the weight, mark with paint at point « a » position of end piece (3) on suspension tie-rod (4).

   a) Unscrew tie-rod to free suspension knife edge (2) (spanner 3455-T or 3455-T a).

   b) Remove inner spring clip and free knife edge (2).

4. **Remove rear brake feed pipe :**

   (Vehicles equipped with « spiral pipes ») :

   a) Remove :
   - the clip securing the cover,
   - the sealing cover.

   b) Disconnect union-nut from wheel cylinder. Open securing clip and free pipe from wheel cylinder.

   c) Remove :
   - the screw (7) securing the three-way screwed union on the crossmember,
   - the nut (5) of the screw (9) securing the feed pipe, passing on the inside of the crossmember.

   d) Free rubber protection bushes (8) and unscrew union-nut (6) of brake circuit on arm to be removed.

   e) Free :
   - the securing screw (9) from the feed pipe pushing it inside the crossmember,
   - the feed pipe from the three-way screwed union.
   - the feed pipe from the crossmember.

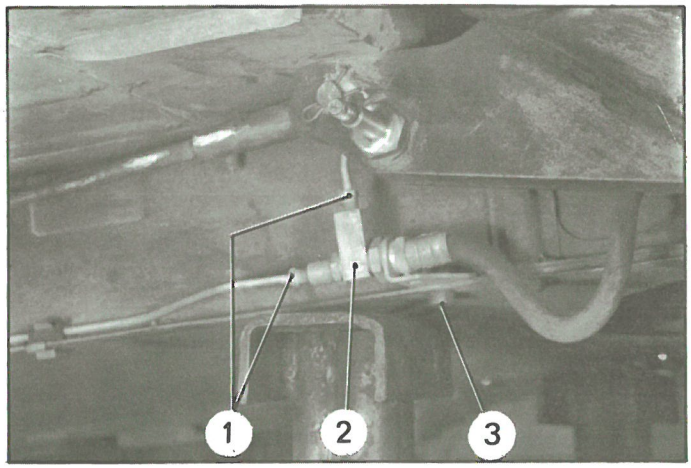

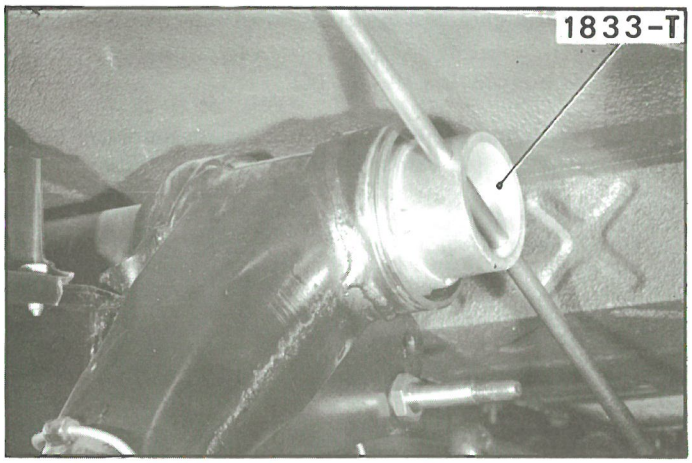

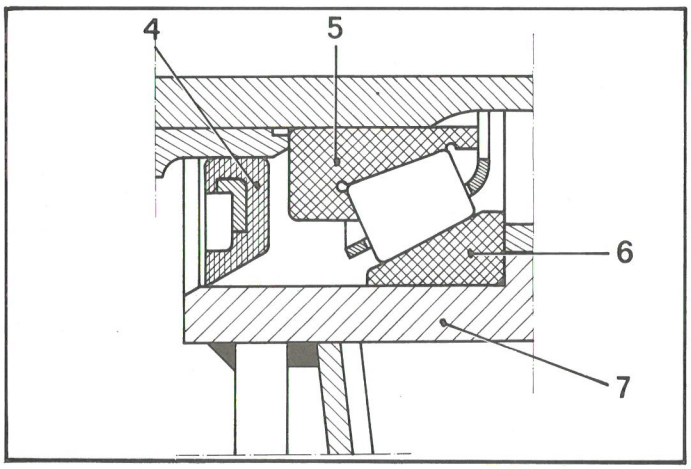

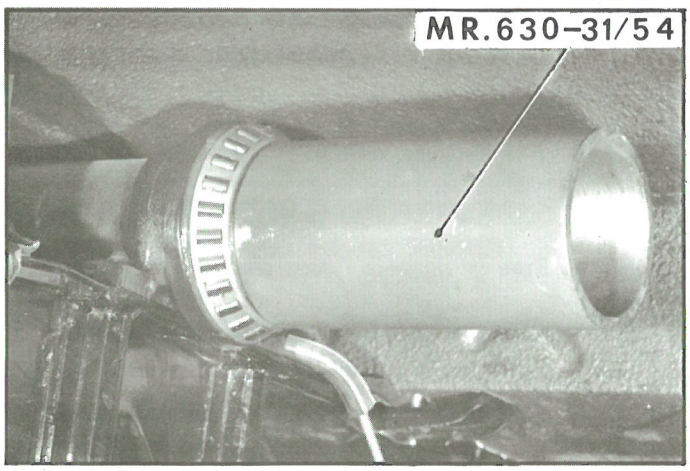

5. Remove rear brake feed pipe :
(Vehicles equipped with « flexible hoses »)

Unscrew the two brake pipe union nuts (1) on the three-way union (2) fitted on left-hand side (one union nut only on right-hand side).
Remove screw (3) securing three-way union (2) on platform.

6. Remove axle arm :

Remove friction damper (if fitted).
Unpin and remove castellated nut (spanner 1833-T).
Free arm from axle crossmember, tapping arm with a mallet, if necessary.

7. Remove, if necessary, inner bearing race (5) and seal (4).
(Use puller with separator 2405-T).

8. Drive out, if necessary, outer bearing races (6) of arm hub bearings (7).

FITTING

9. Fit, if necessary, outer bearing races (6) of arm bearings (7).

10. Fit seal joint and inner bearing race on cross-member (if necessary).

a) Place seal (4) on journal of bearing, positioned as shown opposite : flat part of seal must be in contact with bearing. Use tube MR. 630-31/54 (length 150 mm).

b) Fit inner race (5) of inner bearing, on journal of axle crossmember, first using tube MR. 630-31/54 (length 50 mm), to fit bearing on first journal of crossmember, then the second tube MR. 630-31/54 (length 150 mm), to ensure that it is correctly and finally positioned.

IMPORTANT : If bearings fitted to the same arm are of different make, ensure that they are not interchanged when re-fitting.

An S.K.F. bearing housing must never be fitted in a TIMKEN bearing race, or vice versa, as the tapering of the bearings is not identical.

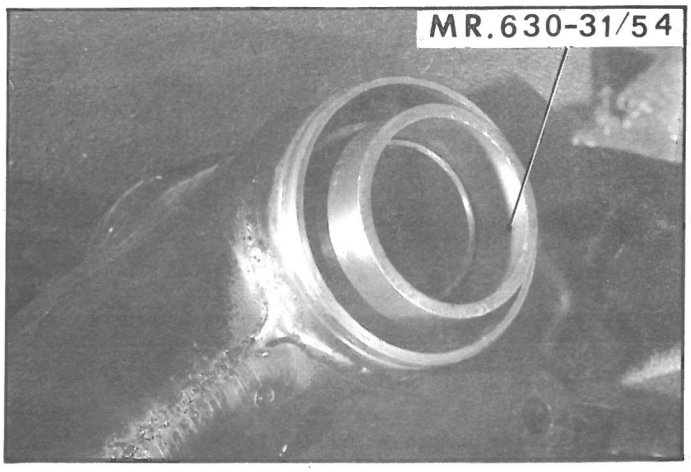

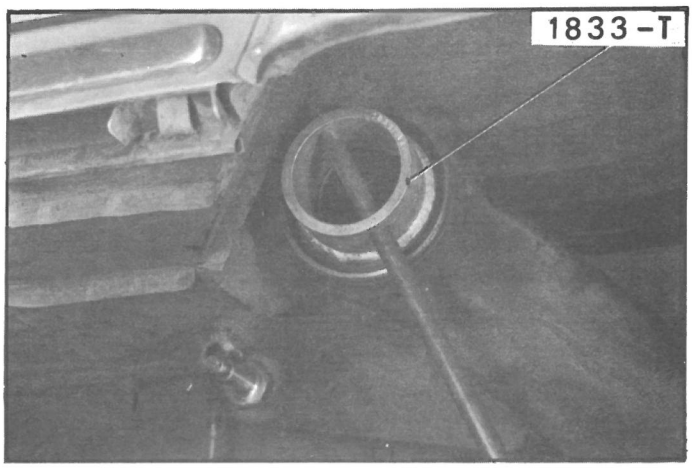

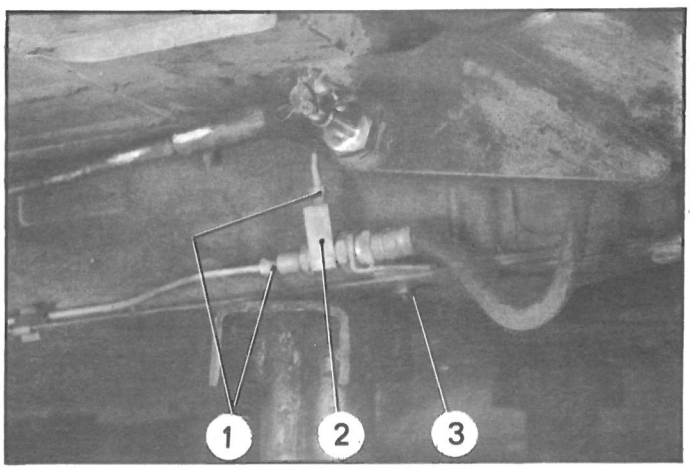

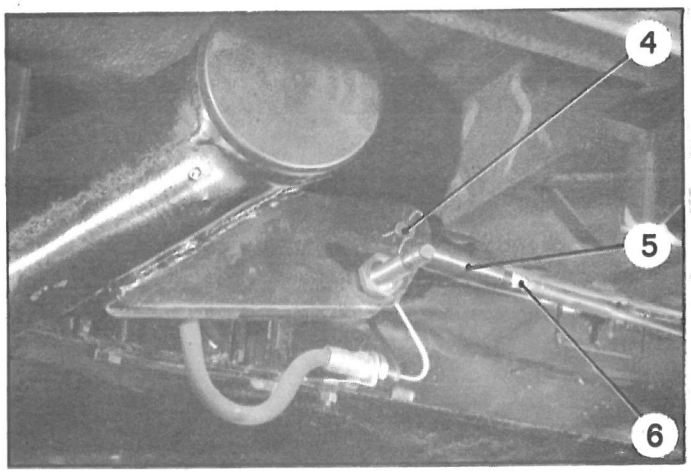

11. Fitting axle arm on crossmember :

a) Grease inner and outer bearings (TOTAL MULTIS MS).

b) Offer up arm on crossmember,

c) Locate outer bearing on axle crossmember, using a tube (tube MR. 630-31/ 54, length 50 mm).

d) Screw and tighten castle nut to 55 mΛN (5.5 m.kg) (spanner 1833-T).
Arm should turn smoothly without any hard point.
Bring nearest slot in nut opposite pin hole by tightening nut *(never loosen)* and pin nut.

12. Fit, if necessary, friction damper, protective housing and rubber seal.

13. Fit rear brake feed pipe :
(Vehicles equipped with « flexible hoses »)

Connect brake pipes (1) to three-way union (2) (new joint packing).

Fit screw (3).

Tighten joints to 6 - 8 mΛN (0.6 to 0.8 m.kg).

NOTE : Flexible hoses must be clear of chassis and arm during its movement.

14. Connect suspension tie-rod to arm :

Grease knife-edge end-piece (5) and knife edge (4) (TOTAL MULTIS).

Offer up the knife-edge end-piece in clevis.

Offer up the knife-edge and fit locking clip.

Screw suspension tie-rod (6) into end-piece (5) as far as paint mark made when dismantling.

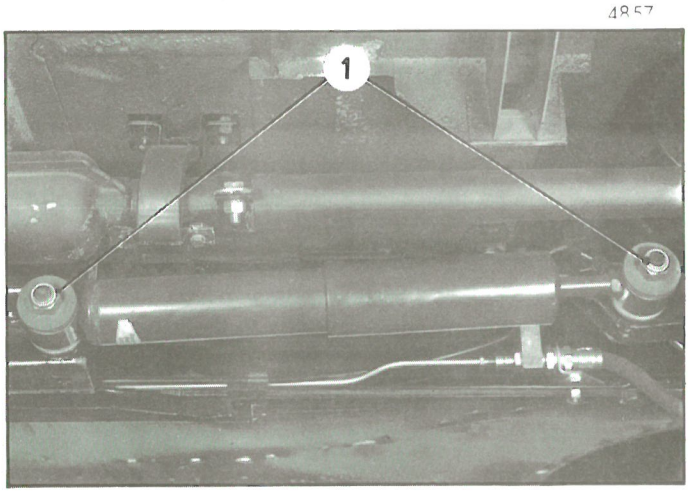

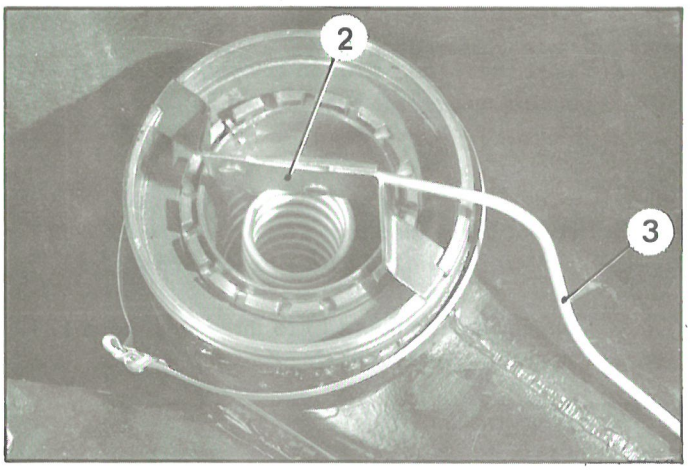

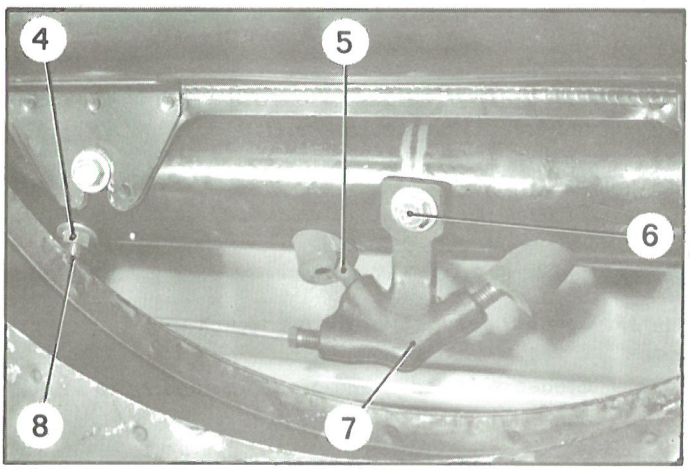

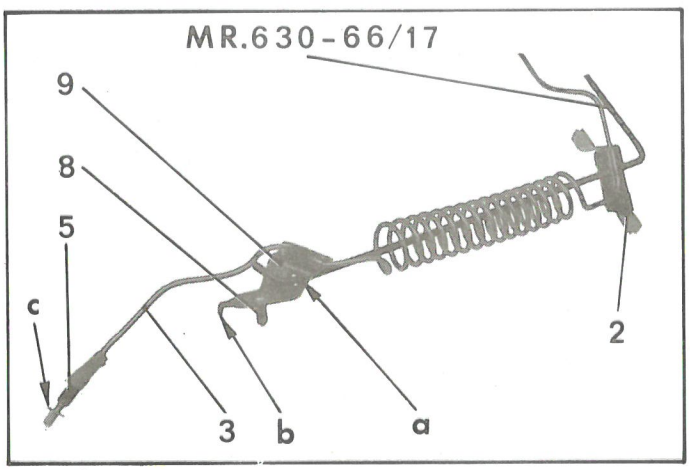

15. Fit shock absorber (if necessary) :

a) Place thickest washers on shaft.

b) Position shock absorber as follows :

« BOGE » shock absorber :

Larger diameter of shock absorber towards the arm : mark facing upwards, outlet holes downwards.

« ALLINQUANT » or « LIPMESA » shock absorbers :

Larger diameter towards suspension unit.

Refer to indications on body of shock absorber for correct positioning of the latter.

c) Fit thinnest washers and screw securing nut (1) without tightening them.

16. Fit rear brake feed pipe :

(Vehicles equipped with « spiral » pipes).

NOTE : To prevent union nut (5) on three-way union side, from sliding along the pipe (3) when fitting, it must be secured at end « c » of pipe with adhesive paper.

a) Insert pipe (3) into crossmember, and guide it by hand until its end « c » comes through hole in crossmember.
Place pipe (3) along the length of arm in its final position.
Hold clip (2) and pull on end « c », giving it if necessary a rotating movement to left or right to allow fitting of screw (8) in its location in crossmember.
Fit nut (4) (shakeproof washer) but do not tighten.

b) Connect feed union (5) to three-way union (7) but do not tighten.
Position three-way union fixing screw (6) but do not tighten.

NOTE : It is sometimes difficult to locate screw (8) in its correct position in cross-member.

In this case, use tool MR. 630-66/17.
Insert tool in « spiral » pipe, with end in slot « a » as shown on photograph.

Insert assembly in crossmember, then connect union nut (5) to three-way union (7) but do not tighten.

Fit three-way union fixing screw (6) but do not tighten.

Holding clip (2) and using tool MR. 630-66/17 position clip (9) so that screw (8) and peg « b » can be inserted into their locations in cross-member.

Position nut (4) (shakeproof washer) but do not tighten.

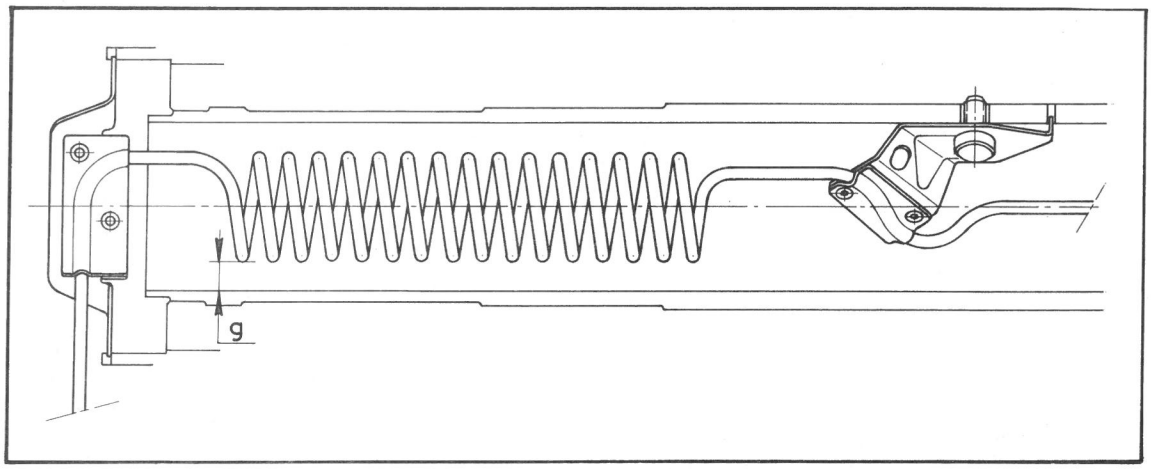

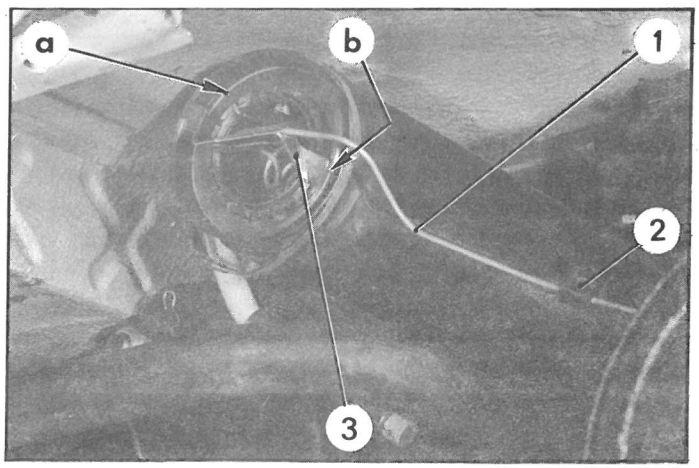

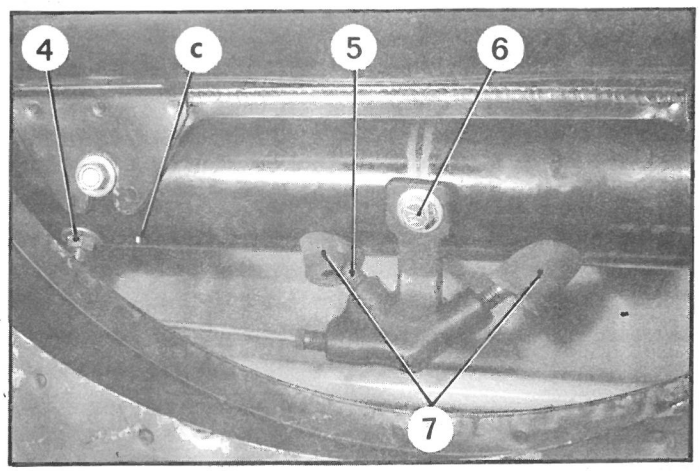

c) Connect pipe (1) to rear wheel cylinder.
Tighten union nut to 8 - 9 mAN (0.8 to 0.9 m.kg) (new seals).
Position :
- pipe (1) under clips (2) and protection sleeve. Turn over the clip.
- clip (3) in notches « a » and « b » on arm.

d) Tighten :
- feed line union nut (5) to 8 - 9 mAN (0.8 to 0.9 m.kg).
- three-way union fixing screw (6) to 19 mAN (1.9 m.kg).
- fixing nut (4) of pipe (1) in crossmember to 10 mAN (1 m.kg) (check that peg « c » is properly positioned in crossmember).

e) Position rubber sealing bushes (7).
NOTE : *Using a rod 6 mm in diameter and 250 mm in length, check that feed pipe spirals have a clearance « g » of 6 mm minimum from the crossmember along the entire length of the pipe.*

f) Fit sealing cover on arm.
Fit and tighten clamp.

17. Bleed rear brake piping :

18. Fit wheel, lower vehicle to ground and tighten wheel nuts.

19. Check and adjust heights if necessary.

20. Tighten shock absorber fixing nuts to 35 - 40 mAN (3.5 to 4 m.kg).

REMOVING AND FITTING A SUSPENSION UNIT.

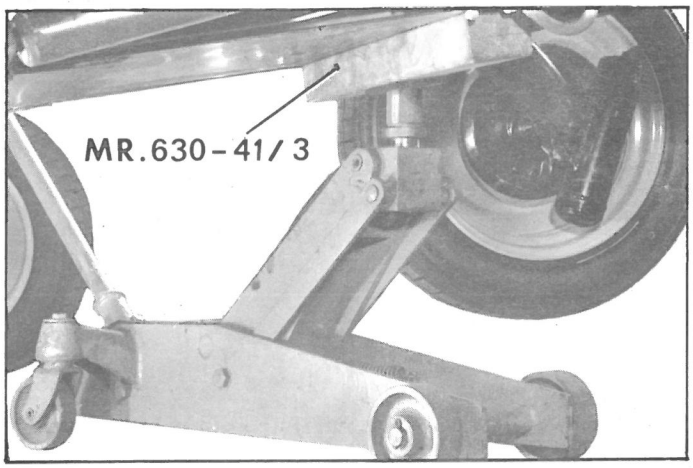

REMOVAL.

1. Raise vehicle using support (MR. 630-41/3) on roller jack.
   Chock under platform at height of front and rear axles, on side where suspension unit is to be removed.

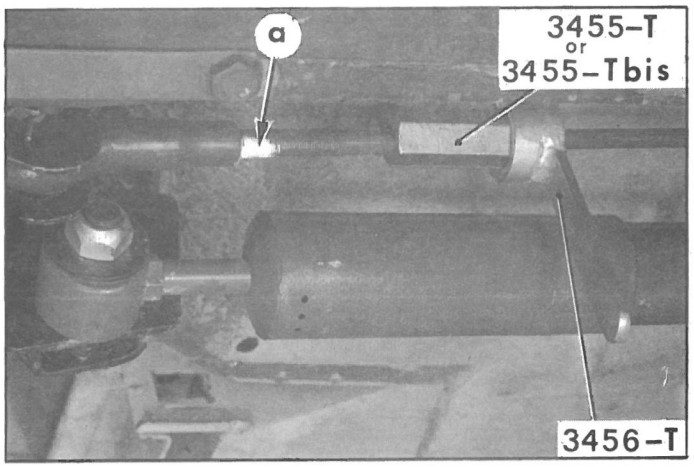

2. **Remove rear shock absorber** *(and according to model, front shock absorber).*

3. **Disconnect front and rear suspension tie-rods :**

   NOTE : To avoid re-adjustment of the heights and distribution of the weights, if suspension unit is not to be replaced, mark with paint of point « a » the position of end-piece on suspension tie-rod.

   a) Unscrew and disconnect tie-rods from front and rear end-pieces (using end-piece 3455-T or 3455-T a and spanner 3456-T).

   b) Free front and rear dust cover (1) from suspension unit.

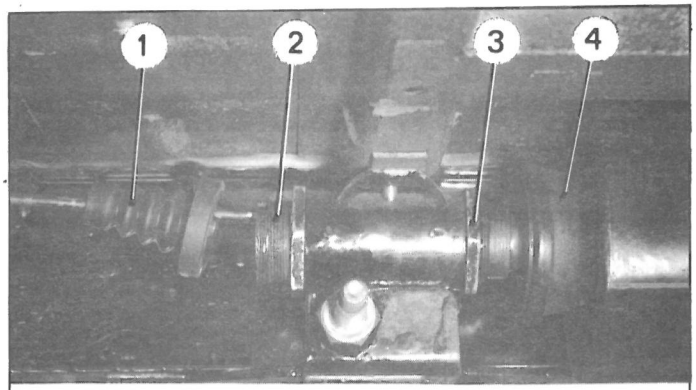

4. **Removing suspension unit :**

   Remove front and rear end-pieces (2) from brackets on sidemember :

   a) Holding adjusting end-piece (2) with spanner 3458-T, unscrew completely the inner adjusting nut (3) (spanner 2186-T or 3453-T).
   b) Remove end-pieces (2) from suspension unit brackets.
   c) Free front tie-rod through slot « b » from sidemember bracket, then free suspension unit towards the front, passing rear tie-rod through sidemember bracket.
   d) Free flexible buffers (4).

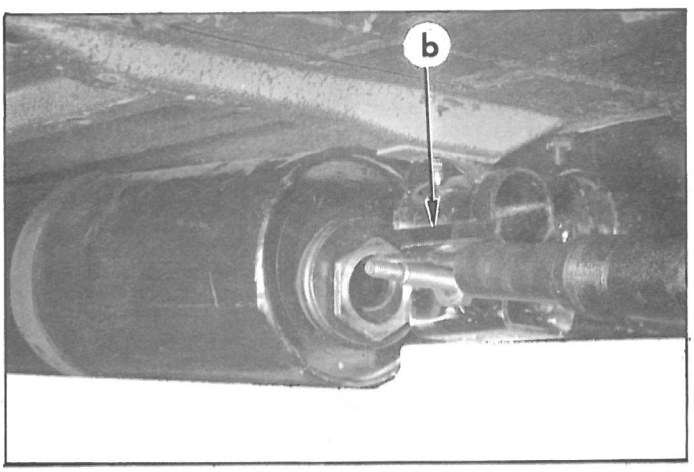

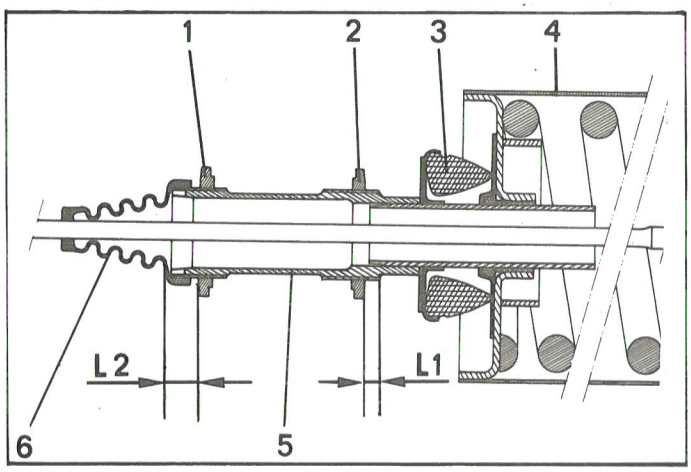

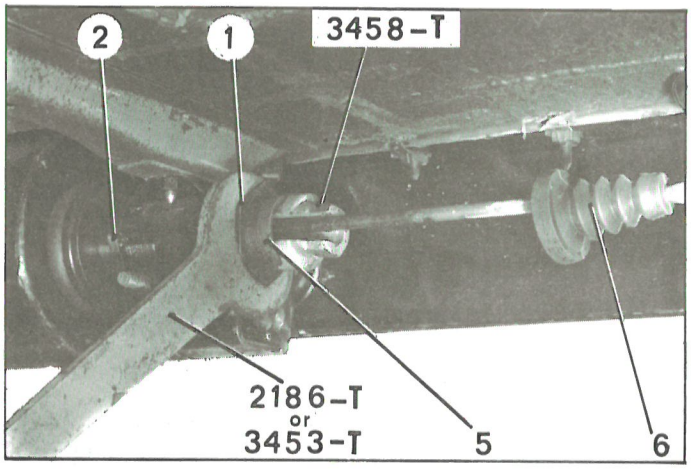

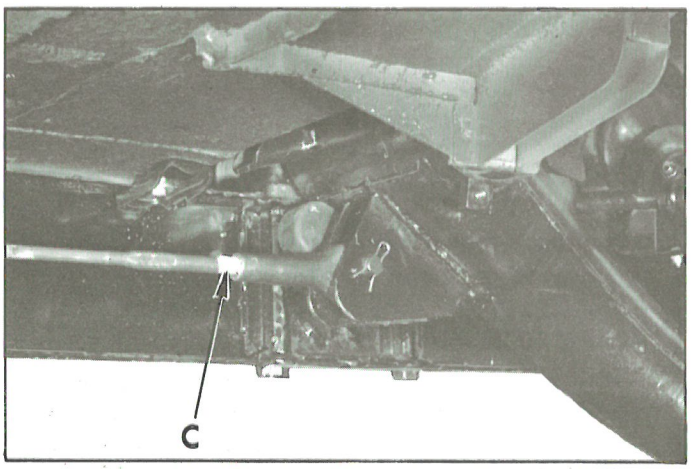

FITTING.

NOTE : Suspension units are delivered complete by the Replacement Parts Department. Front part of cylinder is marked with letters AV on metal container.

5. Fitting suspension unit :

a) Position flexible buffers (3) in contact with cylinder (4).
Position inner nuts (2) against flexible buffers (3).

b) Offer up suspension unit, engaging rear tie-rod into rear sidemember bracket, then front tie-rod into slot on front bracket.

c) Engage adjusting end-pieces (5) into bracket on sidemember.
Fit nuts (2) provisionally.

6. Adjust front end-piece :

a) With nuts (2) and (1) adjust front end-piece to obtain :
L 1 = 5 mm min. and L 2 = 12 mm min.

b) Holding end-piece (5) with spanner 3458-T, tighten nuts (2) and (1) to 180 - 220 mΛN (18 to 22 m.kg) using spanner 3453-T or 2186-T.

7. Fit dust covers (6) in front and rear suspension unit brackets.

8. Grease knife-edge and suspension tie-rod end-piece assemblies (use TOTAL MULTIS MS). Screw suspension tie-rods into front and rear end-pieces up to marks made before removal at point « c ».

9. Lower vehicle to ground.

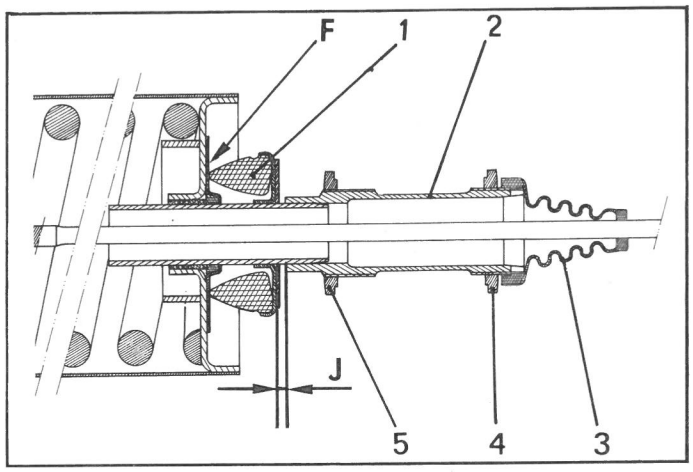

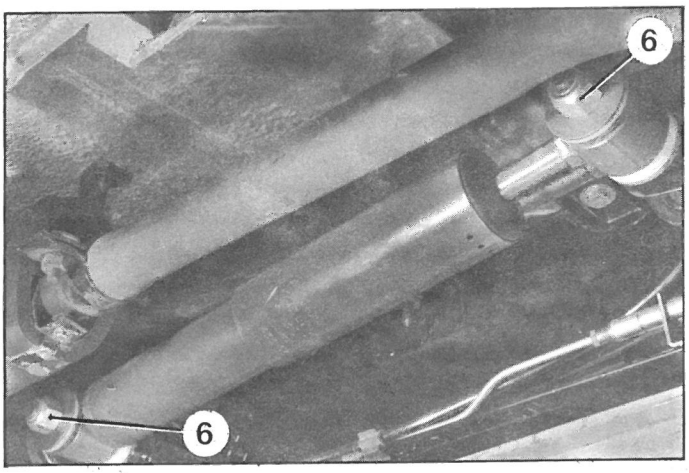

10. Adjust heights :

(See relevant operation).

NOTE : To carry out this operation, vehicles should be in running order, empty and placed on a flat, level surface with tyres inflated, wheels without chocks, front wheels in straight line position, brakes released and shock absorbers removed.

11. Adjust rear over-run stop :

a) Position stop (1) in firm contact with face F of suspension cylinder, and with nuts (4) and (5) adjust to obtain a clearance of J = 0 to 2 mm.

b) Holding end-piece (2) with spanner 3458-T, tighten nuts (4) and (5) to 180 - 220 mΛN (18 to 22 m.kg) with spanner 2186-T or 3453-T.

c) Replace dust cover (3) on end-pieces.

12. Fit rear shock absorber (and according to model front shock absorber) :

NOTE : Do not tighten nuts (6) until vehicle is resting on its wheels, in order to avoid straining the « silentbloc » mountings.

Tighten shock absorber fixing nuts to 35 - 40 mΛN (3.5 to 4 m.kg).

I. REMOVING AND FITTING AN ANTI-ROLL BAR.

5120

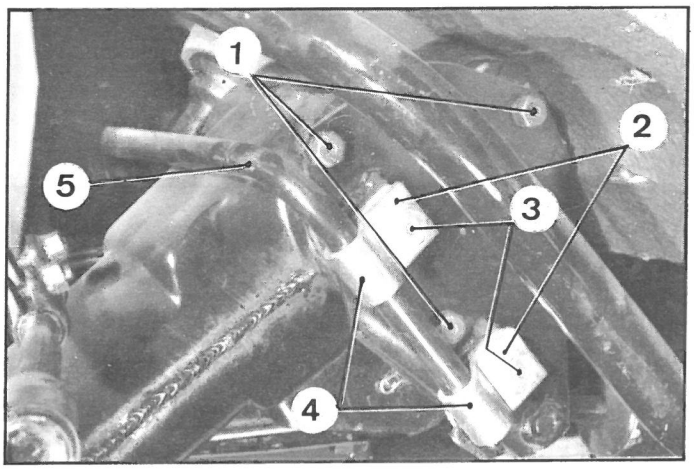

REMOVAL.

1. Raise the front of the vehicle. Remove the front wheels.

2. Remove securing bolts (3) on the L.H. side, and on the R.H. side. (Identify the correct positioning of the shims and of the stop plates).

3. It is advisable to release bar (5) through the L.H. side.

FITTING.

4. Position the bar fitted with securing clamps (4), (10) and (11), on the L.H. side, with the incurved part of the bar directed towards the rear of the vehicle.

5. *On the L.H. side :* Adjust the free-play between the bar and the arm and fit a shim **A** (dia. = 6 mm) between them.
Fit securing bolts (3). Orientate the round edge of bearing plate (2).
Tighten to **6 da Nm (44.2 ft.lbs).**

5225

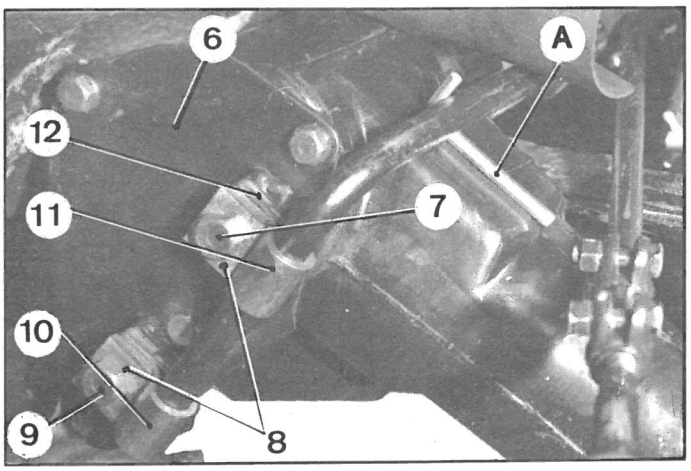

6. *On the R.H. side :*
a) Adjust the free-play between the bar and the arm. Operate in the same way as for the L.H. side.

b) Adjust the side free-play of the bar :
Determine the thickness of shims (12) to be placed between collar (11) and shock absorber bracket (6), so as to obtain a free-play or a stress of 0.5 mm max. before securing bolt (7).
Then determine the thickness of the shims to be placed under clamp (10) in order to obtain a free-play or a stress of 0.5 mm max. before fitting securing bolt (9).
Orientate the round edge of bearing plate (8) towards the clamp.
Tighten the securing bolts to **6 da Nm (44.2 ft.lbs).**

7. Fit the wheels, and lower the vehicle to the ground.

II. CHECKING AN ANTI-ROLL BAR.

NOTE : It is necessary to uncouple the R.H. side of the anti-roll bar for checking or adjusting the vehicle heights.
With the heights correctly adjusted, if after coupling the anti-roll bar, the L.H. and the R.H. heights are different, check the bar.

8. Remove the anti-roll bar (see the same operation para. 1 to 3).

9. Place the bar flat on a bench, or on a flat surface (see the figure).

10. **Check the bar :**

4951

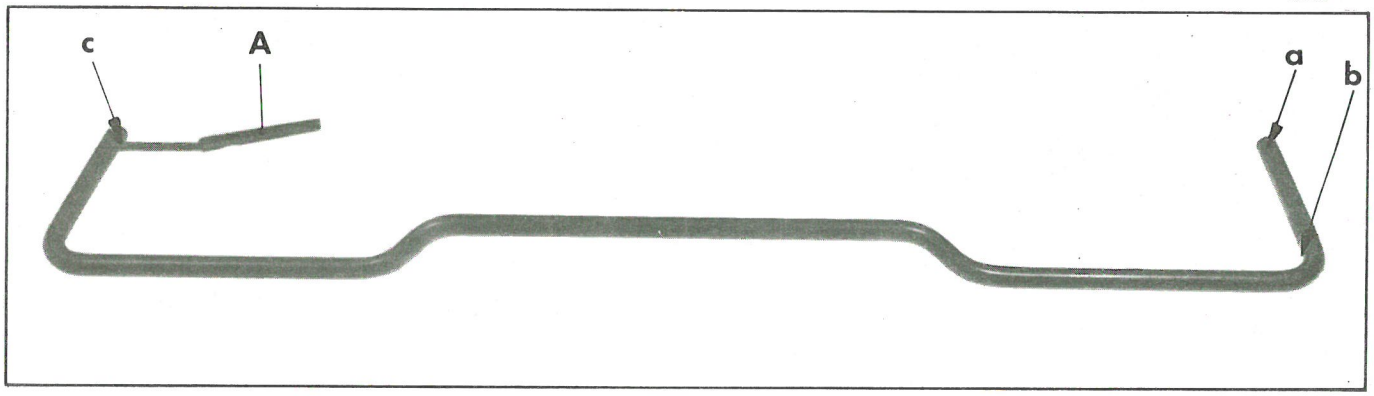

a) Put the bar (at «ab») on the bench and measure the distance between the bench and end (c) of the bar by means of a set of spacers **A**. The distance must be comprised between *0 and 3 mm.*

4950

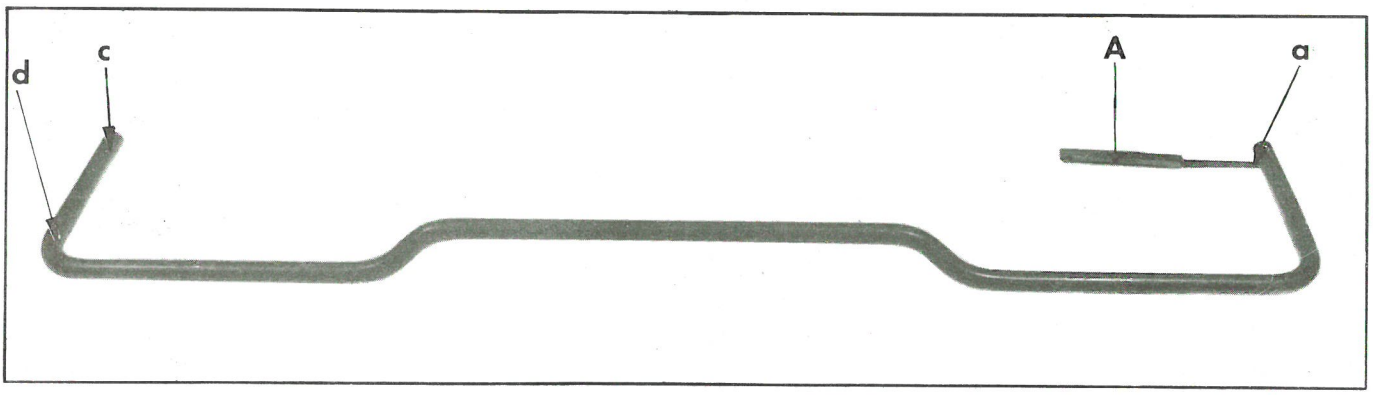

b) Put the bar (at «cd») on the bench and measure the distance between the bench and end (a) of the bar by means of a set of spacers **A**. The distance must be comprised between *0 and 3 mm.*

In both cases, if the distance exceeds 3 mm, the anti-roll bar must be replaced.

I. REMOVING AND FITTING THE STEERING COLUMN FIXED TUBE OR THE ANTI-THEFT DEVICE

(All Types except Mehari)

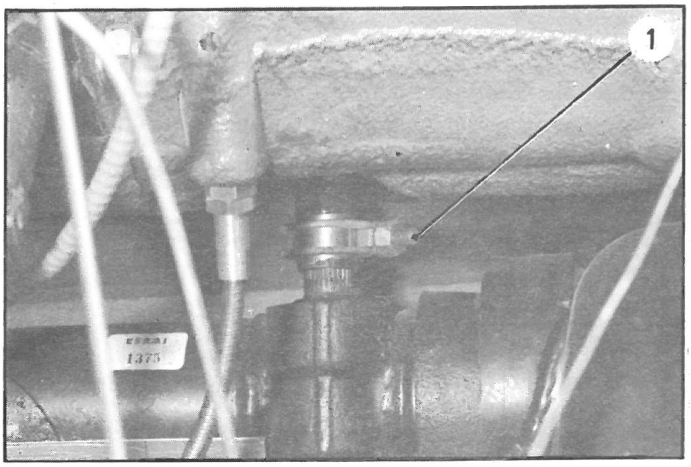

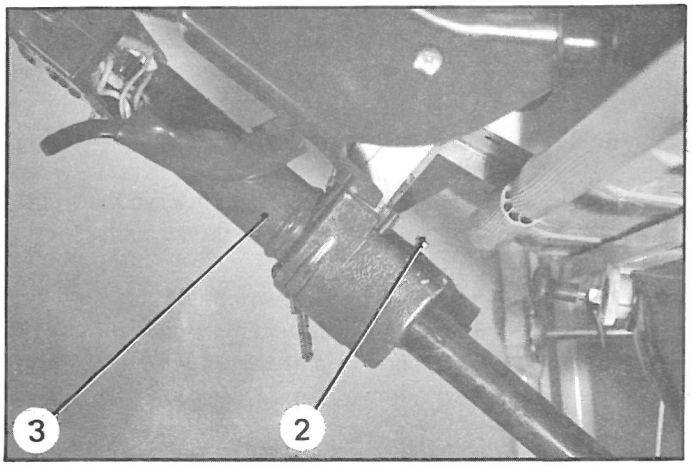

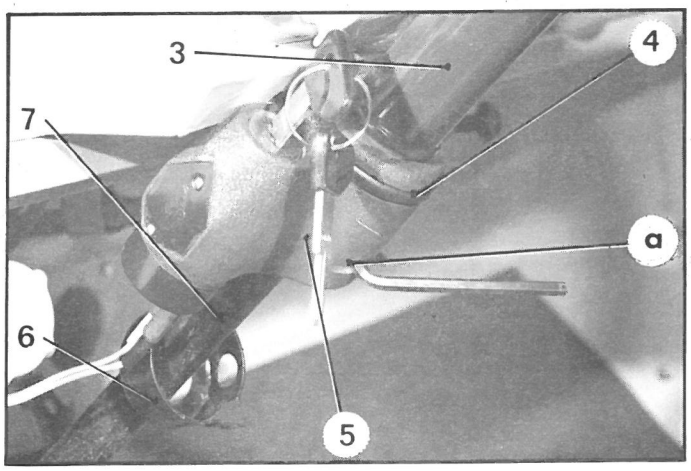

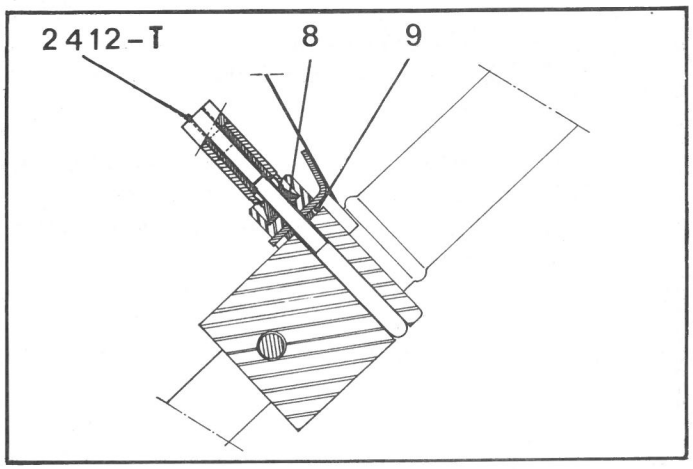

REMOVAL

1. Remove screw on clamp securing steering column (1) on rack pinion, and diconnect supply leads from anti-theft device.
2. **Remove protective bush :**

   Remove fixing screw (2).
   Free protective collar (6).
3. **Remove locking bush :**

   Place anti-theft device in unlocked position,
   Remove fixing screws at « a » (5 mm Allen key).
   Free locking bush.
4. **Remove anti-theft device :**

   Remove fixing nuts (8) of clamp (4) (tool 2412-T).
   Remove anti-theft device (5) and its adjusting shims (9).
5. Remove steering column (7), fixed tube (3) and rubber support block.
6. Free, if necessary, steering column from steering column fixed tube, Rilsan bushes and rubber bushes.

FITTING

7. Fit, if necessary, fixed tube on steering column and position rubber bushes and Rilsan bushes.
8. Connect steering column to rack pinion.
   Tighten nut (1) to 19 mAN (1.9 m.kg).
9. **Fit anti-theft device :**

   Position rubber support block between fixed tube and anti-theft device mounting plate.

   Fit anti-theft device and shims. Tighten nuts (8) to breaking point of nut heads.
10. **Fit locking bush :**

    Set anti-theft device in unlocked position.
    Fit locking bush. Tighten moderately screw at « a ».

    Check that the device locks and unlocks correctly.

    Tighten screws firmly.
11. Fit protective collar (6) and tighten screw (2).
12. Connect supply leads to anti-theft device.

II. REMOVING AND FITTING A FIXED STEERING COLUMN OR ANTI-THEFT DEVICE (DYANE 4 and DYANE 6)

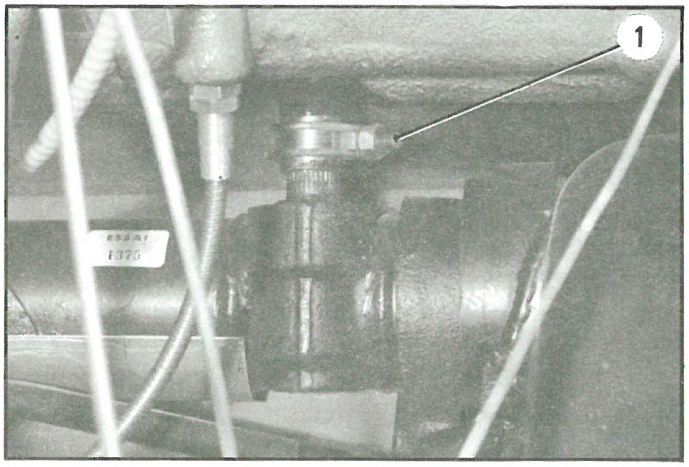

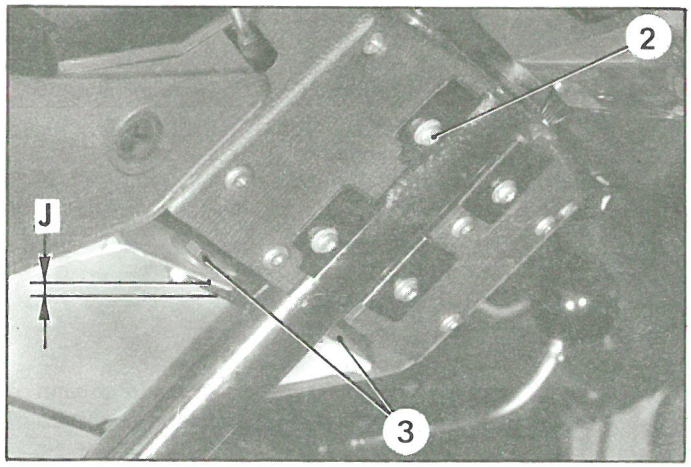

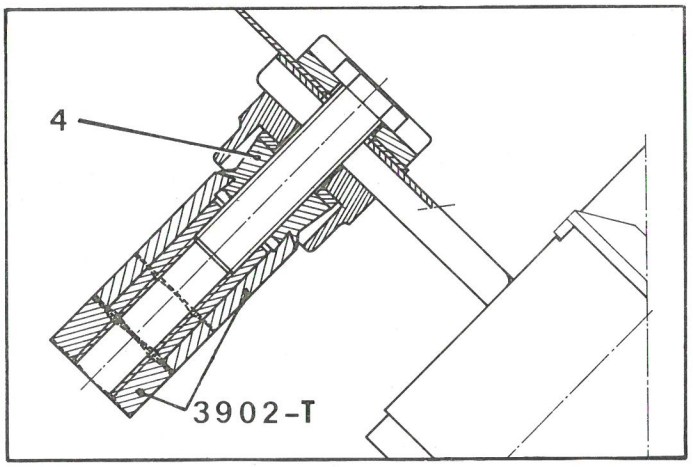

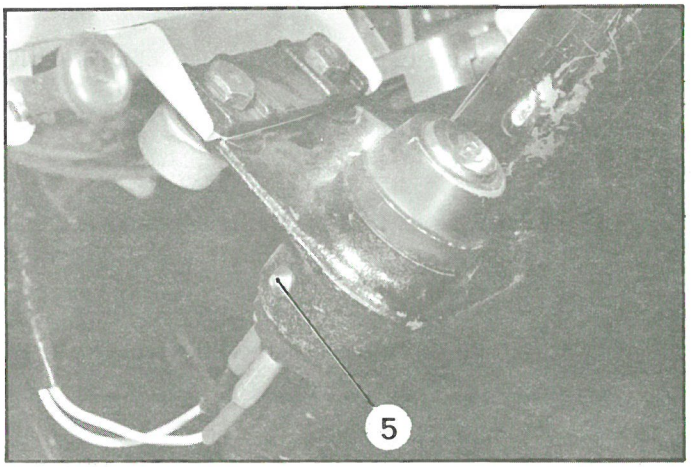

REMOVAL

NOTE : There is no need to remove the anti-theft device when removing the steering fixed tube.

1. Remove screw on clamp securing steering column (1) on rack pinion.
   Remove screws (2) and (3).
2. Remove conical nuts (4) holding fixed tube mounting plate and anti-theft device (tool 3902-T).
3. Free steering column from rack pinion.
   Disconnect supply leads from anti-theft device.
4. Free fixed tube and steering column assembly.
5. Free fixed tube from steering column (if necessary).
   Remove Rilsan bush and rubber bush.
6. **Removing the anti-theft device (if necessary) :**

   a) Drill head of screw (5) with 3.5 mm drill and remove it using « left-hand thread extractor ».

   b) Exert pressure on the switch key and hold in locked position. The locking finger is thus located in body of anti-theft device and latter can be withdrawn.

FITTING

7. Fit anti-theft device :
   Position anti-theft device and tighten screw (5) to breaking point of screw head. Fit rubber bush and Rilsan bush.
8. Fit steering column in fixed tube.
9. Connect steering column to rack pinion.
   Tighten nut to 19 mΛN (1.9 m.kg).
10. Fit screws (2) and (3) and the two conical headed nuts. Fit nuts, but do not tighten.
    Position fixed tube and anti-theft device mounting plate.
11. Tighten screws (2) and (3). Check operation of anti-theft device and rotation of steering column.
    Firmly tighten conical headed screws to breaking point of screw heads.
12. Connect electrical leads to anti-theft device.

III. REMOVING AND FITTING A STEERING WHEEL OR A DRIVE-SHAFT

(AMI 8)

5150

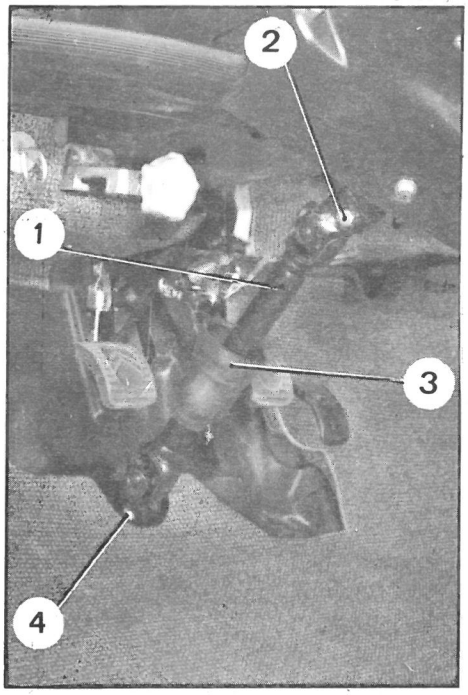

4863

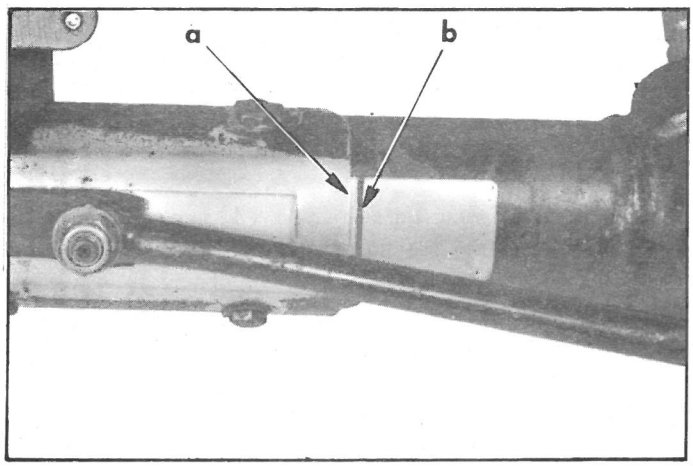

5146

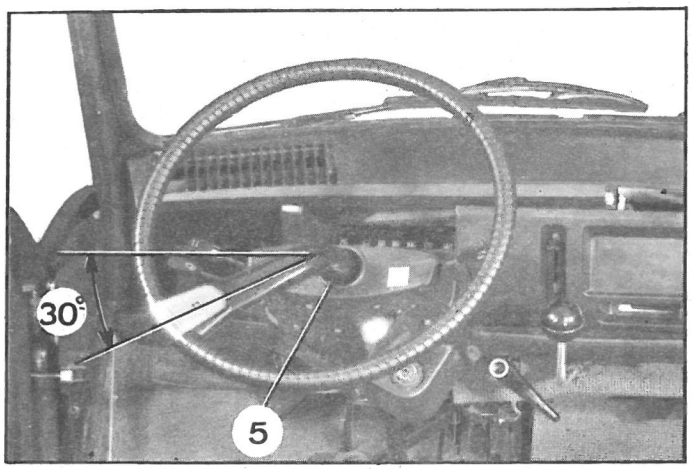

REMOVAL.

1. Set the anti-theft device in the unlocking position.

2. Remove the steering wheel :
Remove securing bolt (2).
Release the steering wheel upwards.

3. When replacing a drive-shaft (1), release protective rubber (3), remove securing bolt (4), free the shaft.

NOTE : Use talc or non mineral grease in order to facilitate the rubber removal.

FITTING.

4. When replacing a drive-shaft (1), insert protective rubber (3) on the shaft and couple the shaft with the rack pinion.

NOTE : Use talc or non mineral grease in order to facilitate the rubber removal.

Screw the nut (Nylstop nut) of securing bolt (4) without tightening it.

NOTE : At each time the bolts are removed, the Nylstop nuts must be replaced.

5. **Couple the steering wheel with the drive-shaft :**

Set the vehicle in a straight position (bring mark « b » engraved on the sliding protective plate of the steering crossmember level with guide « a » of the L.H. side ball joints).

Orientate the steering wheel. The spoke must be on the L.H. side,at an angle of about 30° below the horizontal.

In this position, couple the end of the steering column with drive-shaft (1).
Screw the nut (Nylstop nut) of securing bolt (2) without tightening it.

NOTE : Each time the bolts are removed, the Nylstop nuts must be replaced.

6. **Check the position of the steering wheel in depth :**

For one full turn of the steering wheel, the spoke must not touch plastic ring (5).

Tighten nuts (2) and (4) **to 2 mdaN (14.7 ft.lbs).**

Slide protective rubber (3) to a maximum, downwards.

7. Check the operation of the anti-theft device.

IV. REMOVING AND FITTING A STEERING COLUMN OR AN ANTI-THEFT DEVICE

(AMI 8)

5150

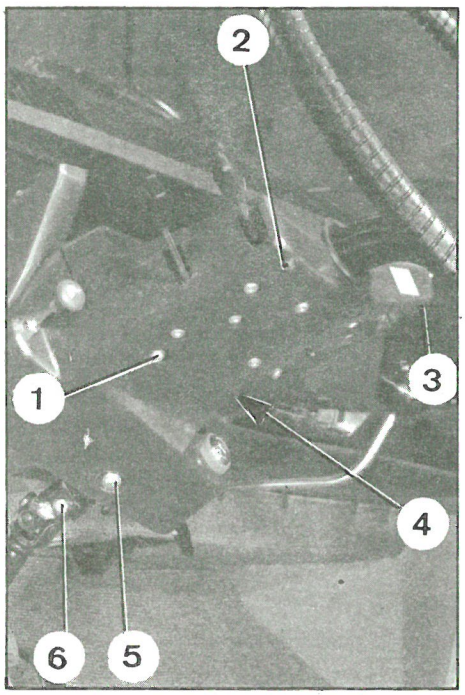

4879

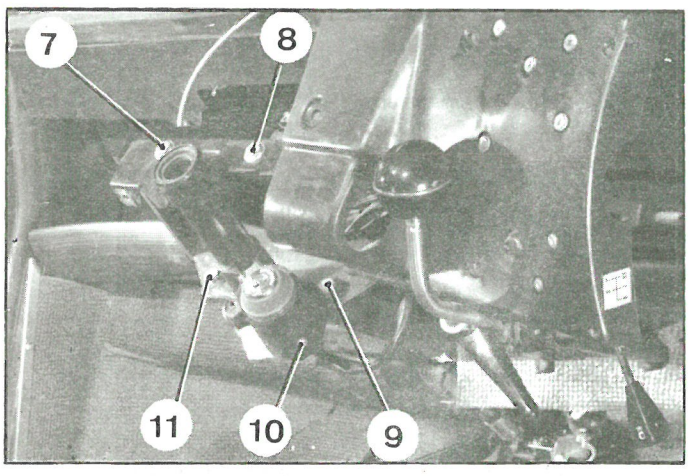

REMOVAL.

7. Disconnect the earth cable of the battery negative terminal.

8. Remove the spare wheel.

9. Uncouple the control cable of the choke from the carburettor.

10. Set the anti-theft device in the unlocking position.

11. Remove the steering wheel :
Remove securing bolt (6).
Release the steering wheel upwards.

12. Remove the upper part of the bracket supporting the electric controls :
Remove securing bolts (2) and (3).
Release the casing.

13. Remove the lower part of the bracket supporting the electric controls :
Remove securing bolts (1), (4) and (5).
Release the bracket and let it rest on the R.H. side, on the gearbox control lever so as to avoid disconnecting the wires.

14. Remove the anti-theft device :
Remove securing bolt (1 0).
Disconnect the wires of the anti-theft device.
Release the anti-theft device.

15. Remove the fixed steering column :
Remove securing bolts (7), (8), (9) and (11).
Release the fixed column.

4879

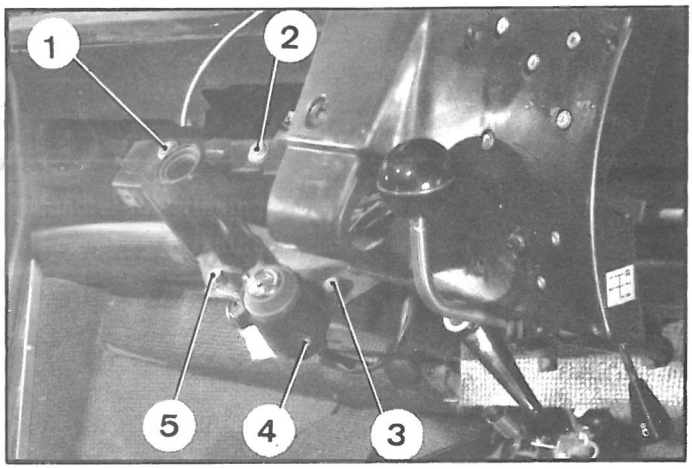

5150

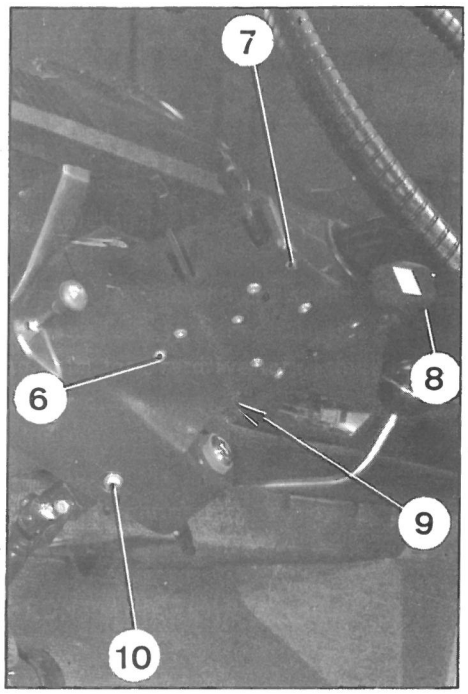

5174

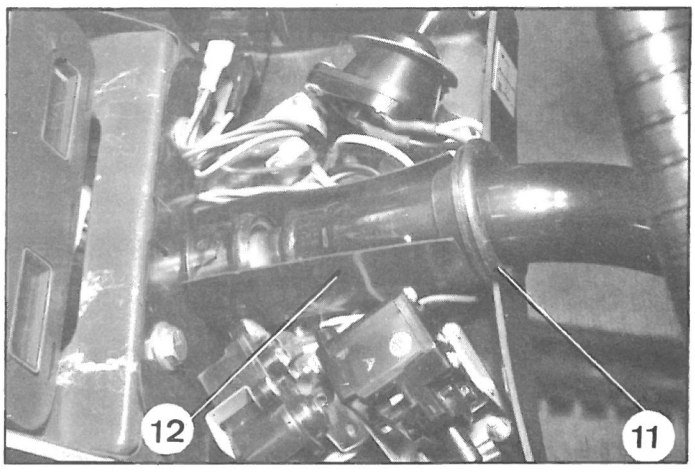

FITTING.

16. Fit the fixed steering column, fit and tighten securing bolts (1), (2), (3) and (5) (lugged contact washer).

17. Insert the anti-theft device in its housing, fit and tighten securing bolt (4) (serrated washer). Couple the electric wires.

18. Place the lower bracket supporting the electric controls :
Fit the bracket, fit and tighten securing bolts (6), (9) and (10) (lugged contact washer).

Correctly position the electric wires in the bracket and fit protective plastic (12) which covers the drive-shaft.

19. Position the upper bracket supporting the electric controls :

Fit :
- the plastic ring (11),
- the upper bracket.

Fit and tighten securing bolts (7) and (8).

20. Couple the steering wheel with the drive-shaft (see Operation , para. 3 and 4).

21. Couple the choke control cable to the carburettor.

22. Connect the earth cable of the battery negative terminal.

23. Check :
- the electrical and mechanical operation of the anti-theft device,
- the operation of the electric controls on dash-board.

24. Fit the spare wheel.

I. REMOVING AND FITTING THE BRAKE SHOES OR A WHEEL CYLINDER

REMOVAL.

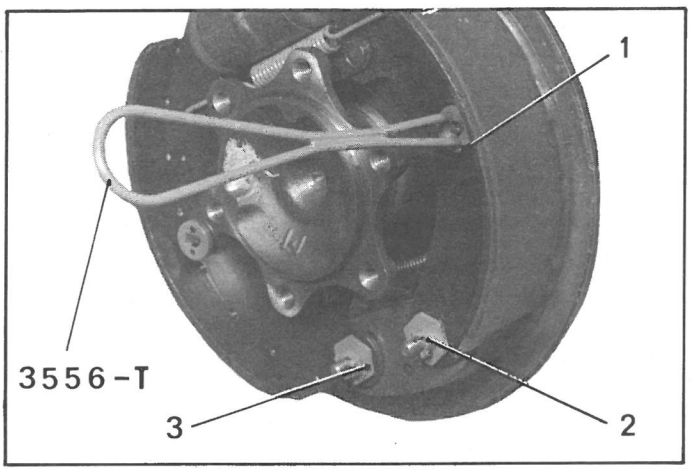

1. Disconnect drive shaft from gearbox outlet flange or from pivot hub according to type of drive shaft.
(See relevant operation).

2. Remove brake drum
(See relevant operation).

3. **Remove wheel cylinder :**

Remove the screwed union from the wheel cylinder feed pipe.

Remove the two wheel cylinder fixing screws.

Separate shoes by turning adjusting cams and free wheel cylinder.

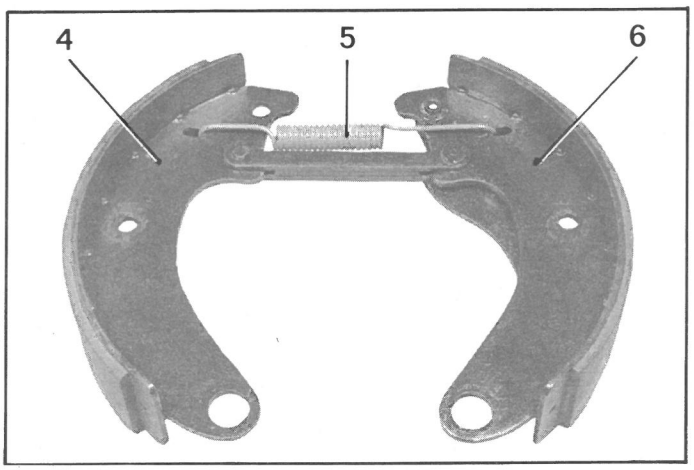

4. **Remove brake shoes :**

Remove the split pins and remove eccentric holding nuts (2).

Free eccentrics (3).

Using tool 3556-T, remove retaining caps (1) and free shoe thrust springs.

Unhook handbrake cable and remove the two brake shoes (4) and (6).

NOTE : It is necessary to hold in position the guide rod of the front shoe thrust spring, otherwise there is a risk of it falling inside the clutch housing, via the hole for machining and fitting the clutch fork spindle.

5. Remove return spring (5) by separating lower ends of shoes.

FITTING.

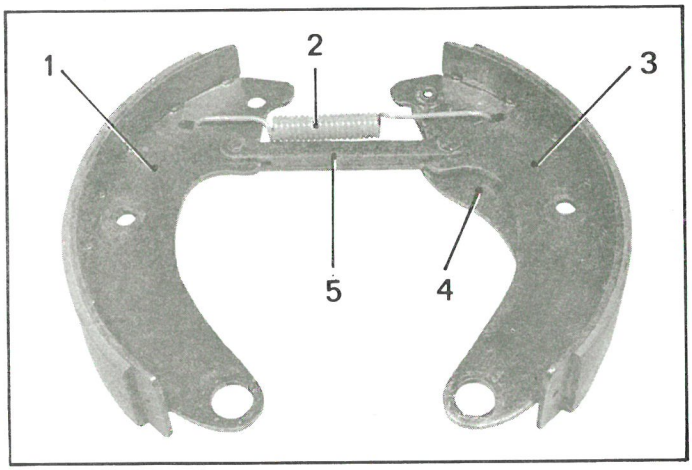

NOTE :
1°) Check that the brake lining surface is dry and free from any trace of oil or grease.
2°) To maintain an even braking distribution, always replace all four shoes on the same axle. Surfaces of brake drums should also be in identical condition.

6. Fitting brake shoes :

a) Hook handbrake cable to the lever on (4) shoe (3). This shoe has a long lining and is fitted towards the front.
b) Fit return spring (2), positioning link (5) on rear shoe (1).
Hold the spring in position when closing the lower part of the shoes.
c) Engage the shoes on the studs in backplate (7). Position eccentrics (11), washers and slotted nuts (10). Screw nuts provisionally.

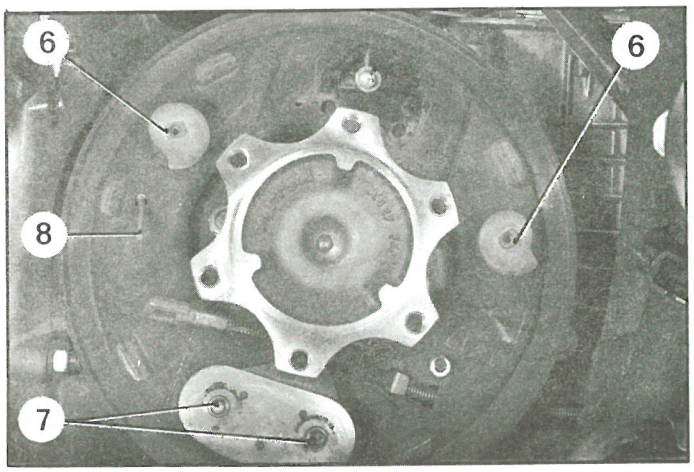

7. Position wheel cylinder :

Open brake shoes, by turning adjusting cams if necessary. Tighten cylinder fixing screws (shakeproof washer).

8. Fit thrust springs, caps (9) and lock them on the guide rods (8) using tool 3556-T.

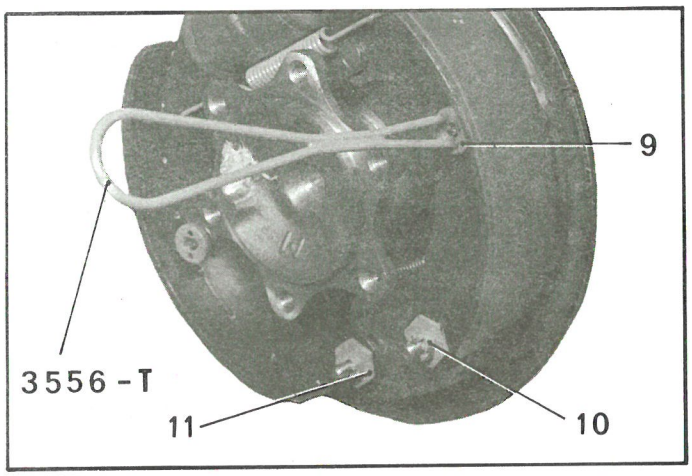

9. Centring brake shoes :

a) Measure diameter of drum :

1°) Adjust cams (6) and eccentrics (11) so that drum can be easily fitted.

2°) Secure the drum by means of the three screws. Insert a distance piece 7 mm thick, under each screw head, to compensate for thickness of drive shaft (if necessary).

3°) Turn adjusting cam of one brake shoe until lining just touches drum.
(Turn drum while making allowance for eccentricity).

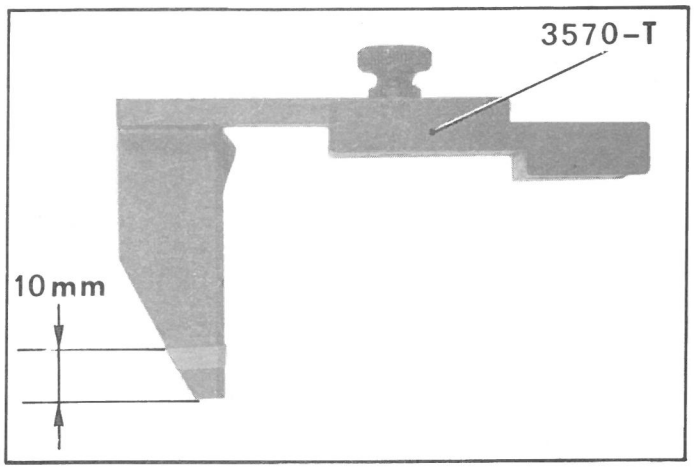

4°) Remove drum, then fit brake centring fixture 3570-T on gearbox outlet plate.

NOTE : This tool 3570-T can be used to centralize front brake shoes all types of vehicle, provided that it is altered as described below :
Shorten the length of arm by 10 mm. If necessary, reshape profile of elongated hole with a file, at point « a ».

5°) Adjust arm A so that is just touches brake lining on upper part of shoe.

b) Centring brake shoes :

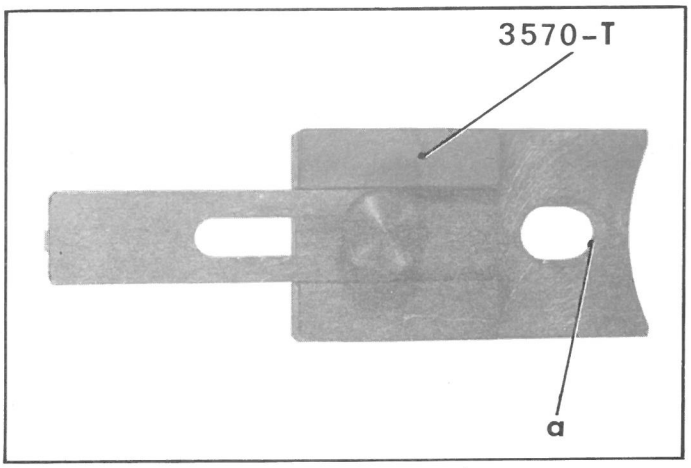

1°) Turn gearbox outlet flange. When arm A touches lining through a complete turn, centring is correct.
Obtain this condition by working successively on the eccentrics (1) of fixed points and adjusting cams.

2°) Remove fixture 3570-T, then tighten and split pin the slotted nuts (2) on the eccentrics.
Loosen cams to facilitate fitting of drum.

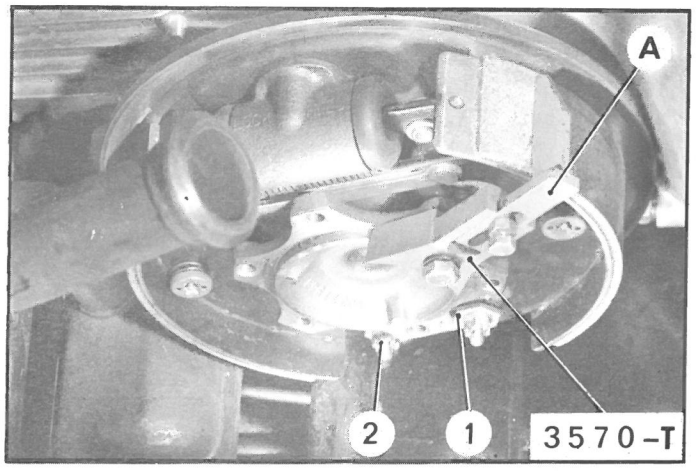

10. Connect feed pipe to wheel cylinder.
Fit new sealing sleeve « b » on pipe.

NOTE : Sealing sleeves must be renewed after each dismantling. It should stand down two millimeters from end of tube (before fitting).
Centre tube in bore by inserting it along the centre-line of the hole. *Ensure that tube end penetrates well the small bore at point « c ».*
Start joint nut by hand and tighten moderately : 6 to 8 mAN (0.6 to 0.8 m.kg).
This relatively light tightening is sufficient to ensure a good seal.
Excessive tightening will cause a leak.

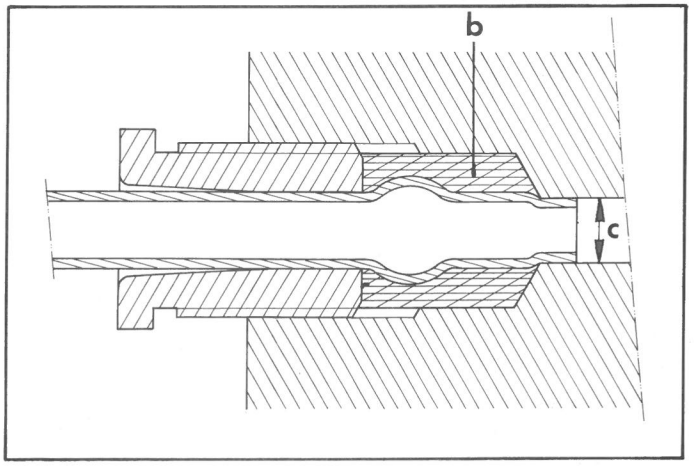

11. Position brake drum and connect drive shaft.
(See relevant operation).

12. Adjust brake cams and bleed the brake piping.

II. REMOVING AND FITTING A BRAKE BACKPLATE OR A DIFFERENTIAL SHAFT OR A BEARING SEALING BUSH

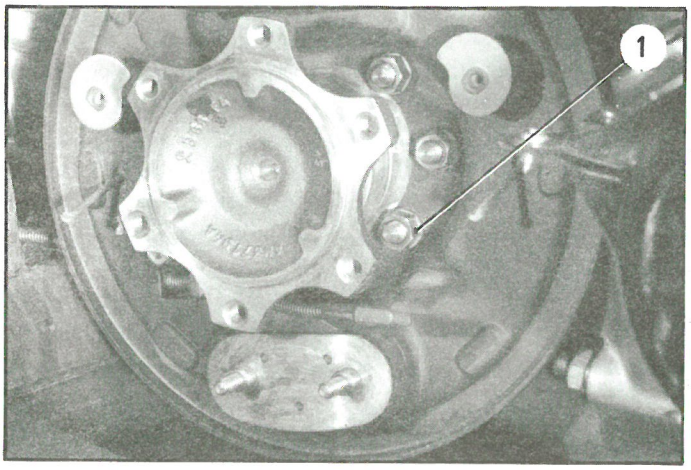

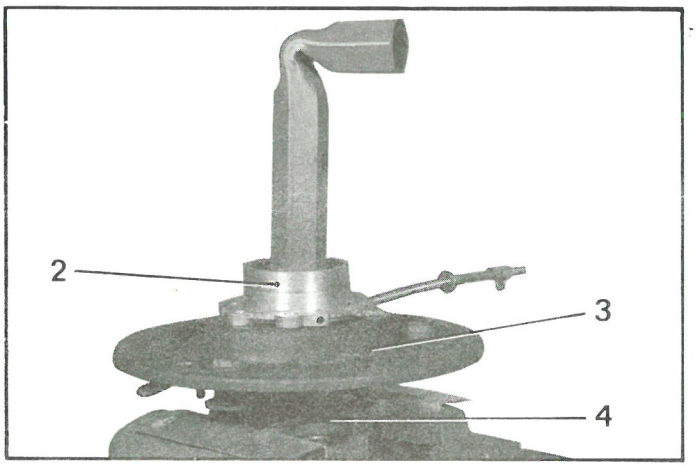

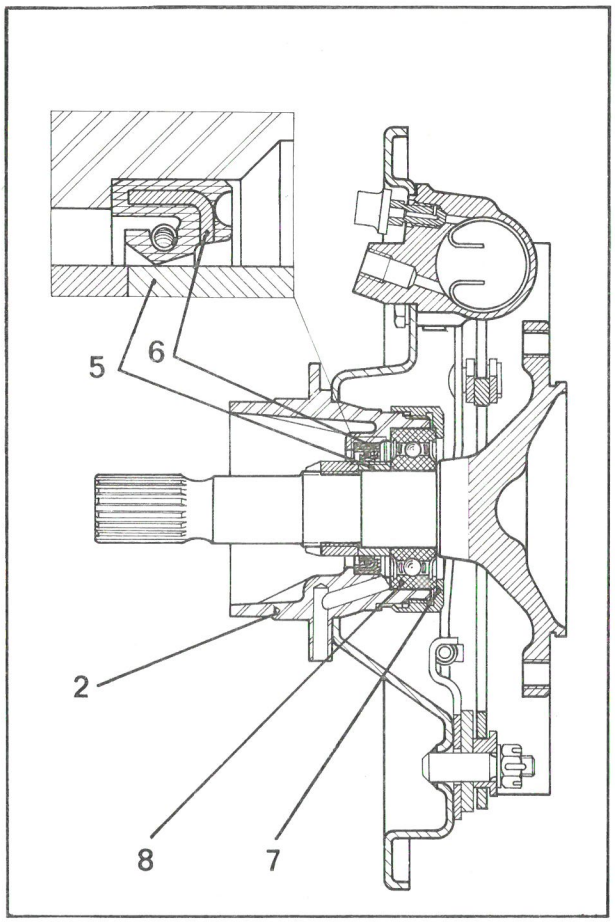

REMOVAL

1. Drain gearbox and disconnect lead from negative terminal of battery.

2. **Disconnect drive shaft and remove brake drum :** *(See relevant operation).*

3. **Remove brake shoes :** *(See relevant operation).*

4. **Removing brake backplate and differential shaft :**

   a) Remove fixing nuts (1) from differential shaft bearing.

   b) Remove sheath stop from handbrake cable.

   c) Free differential shaft bearing and brake back-plate assembly.

   NOTE : Do no mislay the differential housing adjusting shims.

5. **Stripping differential shaft bearing and brake backplate assembly :**

   a) Hold differential shaft still by tightening its drive flange (4) in a vice fitted with soft jaws. Free (if need be) burred over metal with a cold chisel and remove holding nut of differential shaft in bearing housing.

   Using a press and with brake backplate (3), resting on a pair of Vee-blocks drive off bearing from differential shaft.

   Free backplate from bearing housing (2).

   b) *Vehicles fitted with gear change lever on rear cover of gearbox :*

   Using a screwdriver, extract hub sealing bush. (Take care not to damage hub during this operation).

   c) *Vehicles fitted with gear change lever on upper cover of gearbox :*

   Clamp bearing (2) in vice.
   Unscrew bush-nut (7) (chain or strap wrench).

   Remove :

   - sealing bearing (8),
   - distance piece (5),
   - sealing bush (6).

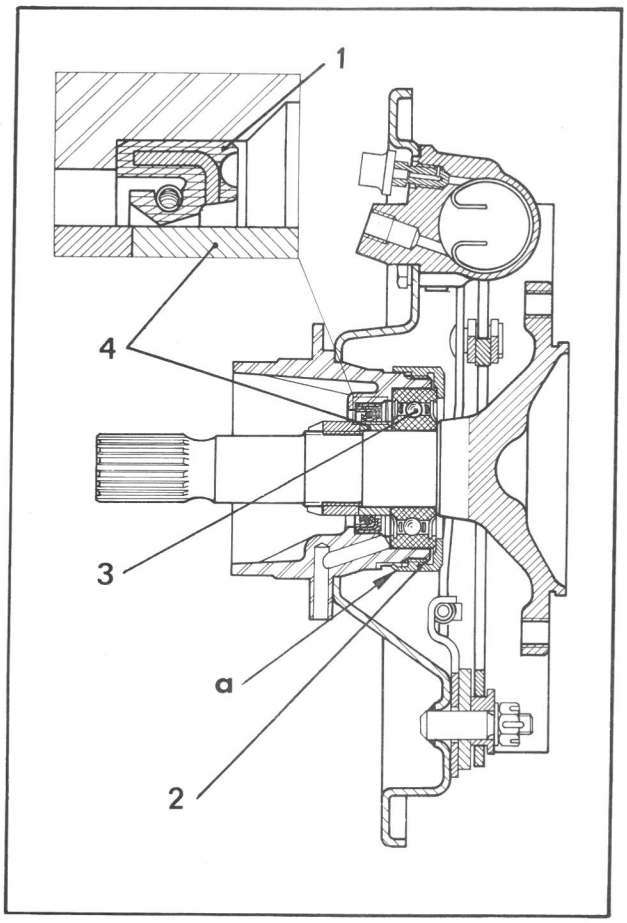

12688

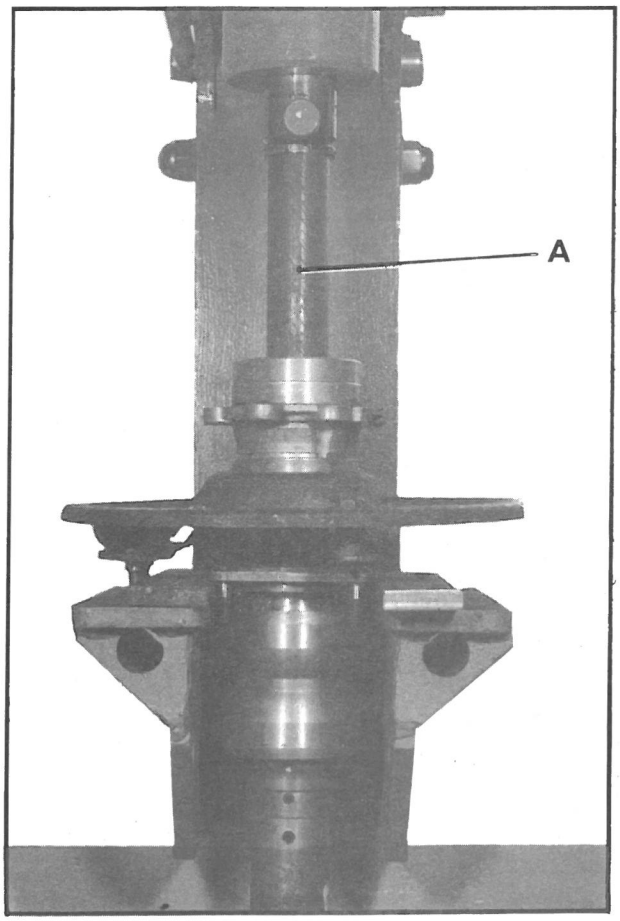

FITTING

6. Assemble bearing housing, differential shaft and brake backplate assembly.

a) If necessary, fit adjusting cams.
Clinch their pins so as to obtain a turning torque 10 to 25 mΛN (1 to 2.5 m.kg).
Use dolly MR. 630-62/13 and a snap tool MR. 630-62/11.

b) *Vehicles fitted with gear change lever on upper cover of gearbox :*

Position :
- sealing bush (1) (previously oiled), (Locate as shown opposite)
- distance piece (4), in bore of sealing bush, inserting it from the outside,
- sealing bearing (3),
- bush-nut (2) tightening with chain or strap wrench to 60 - 75 mΛN (6 to 7.5 m.kg),

With a matting tool burr over metal edge of bush-nut at « a ».

c) *Vehicles fitted with gear change lever on rear gearbox cover :*

Fit sealing bush previously oiled into hub, with lip of bush towards interior.

7. Fit differential shaft into bearing housing :

a) Place brake backplate on bearing housing (hole through which brake cable passes, should be located towards the rear after fitting).

b) Offer up assembly on shaft :

Position differential shaft in bearing, using a press, resting bearing housing on tube A.
(Inside diameter 26 mm, outside diameter 34 mm, length 150 mm).

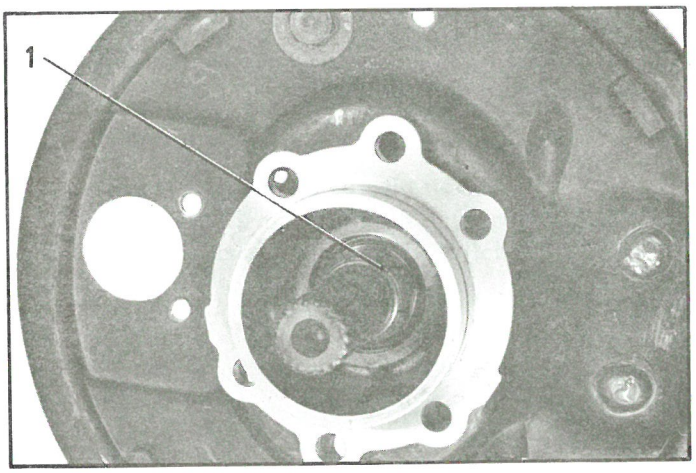

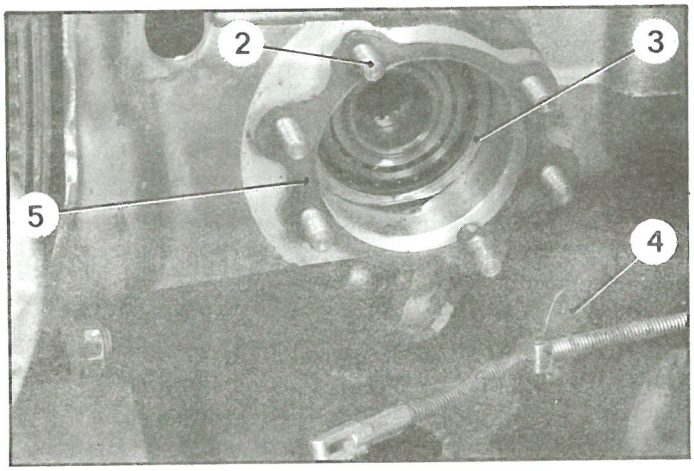

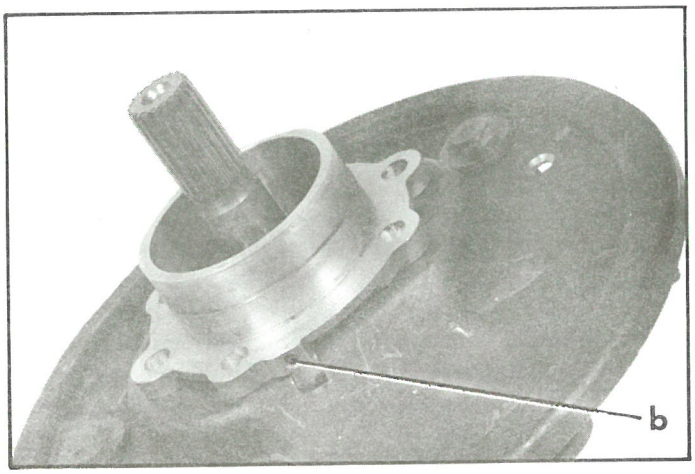

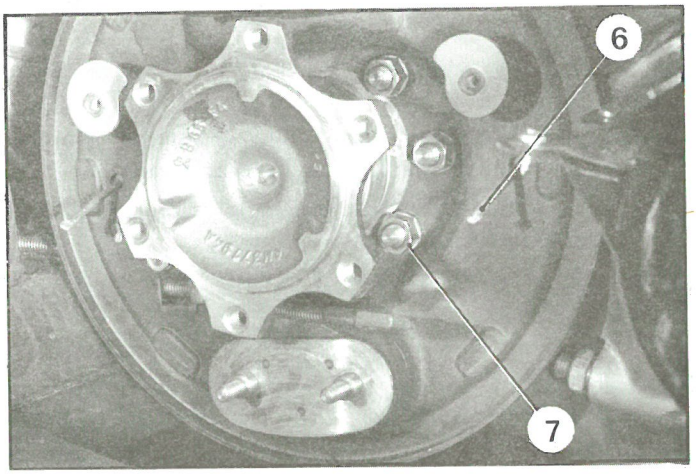

c) Screw and tighten nut (1) to 100-120 mAN (10 to 12 m.kg).

Knock over the metal of the bush-nut in countersunk portion of shaft, using a matting tool.

8. **Fit differential shaft, brake backplate assembly :**

a) Fit paper gasket (5) on bearing housing fixing studs.

b) Stick with grease adjusting shims (3) found when dismantling, against outer race of differential bearing.
Fit differential shaft-brake backplate- bearing housing assembly onto fixing studs (2).

NOTE CAREFULLY :

1°) Locate bearing housing so that drain holes « b » are positioned downwards.

2°) When fitting assembly, ensure that guide pin (6) of shoe thrust springs are positioned in backplate and hold them in position.

Tighten nuts (7) to 38 - 42 mAN (3.8 to 4.2m.kg).

c) Position handbrake cable sheath stop (4), fit and tighten fixing screw.

9. Fit and centralize brake shoes :
(See relevant operation).

10. Fit brake drum and connect drive shaft :
(See relevant operation).

11. Fill up gearbox :
(0.9 litre of SAE 80 EP oil).

12. Bleed brake circuit :
(See relevant operation).

13. Connect lead to negative terminal of battery.

4997

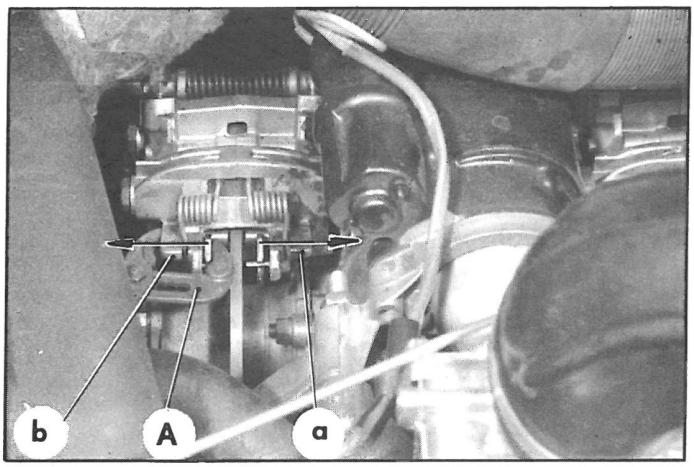

4998

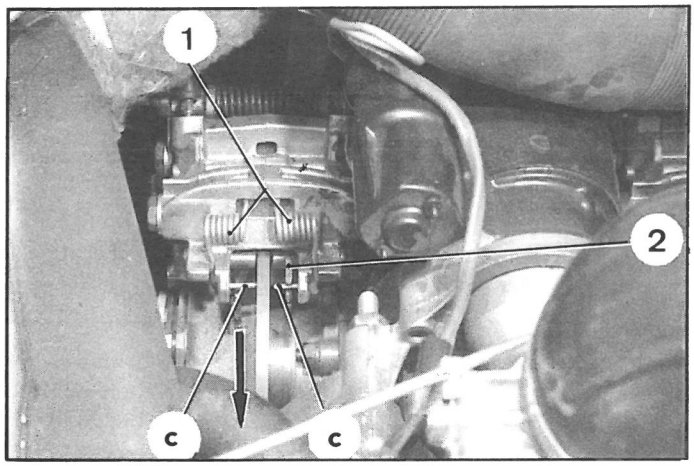

5315

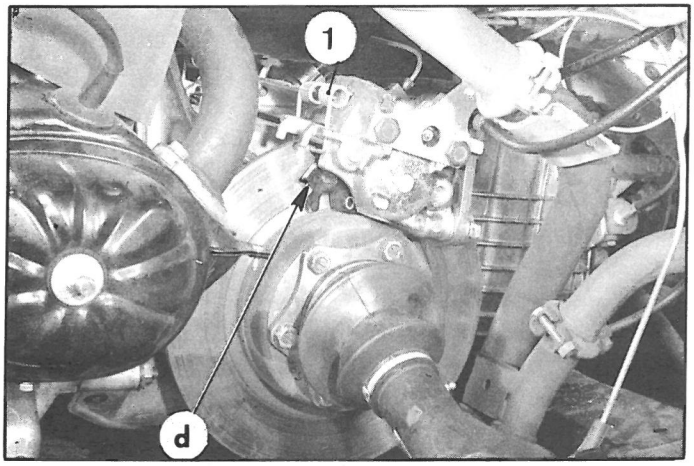

5314

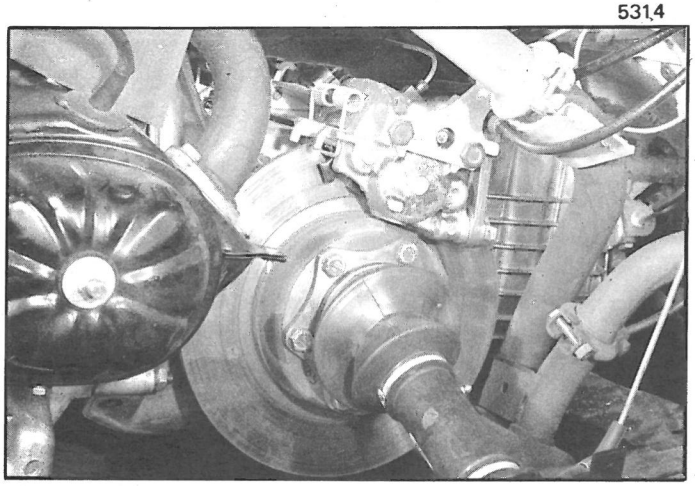

I. REMOVING AND FITTING THE MAIN BRAKE PADS.

REMOVAL.

1. Push back the pistons :

Push back the pads towards the brake caliper (following the direction of the arrows), by using adjustable pliers **A** and by resting on the pad and on bosses (a) and (b).

2. Remove the pads :

Pull on ends « c » of double spring (1) and push pad (2) downwards. Release the pad towards the front (following the direction of the arrow).

NOTE : For even braking, the four pads must always be replaced together.

FITTING.

3. Fit the pads :

Fit the pad into the caliper by pushing it to the rear as far as possible.

Lock the pad by raising its end so that spring (1) engages in notch « d ».

Operate the brake pedal several times to make sure that the pedal travel remains normal.

II. REMOVING AND FITTING A FRONT BRAKE CALIPER.

5311

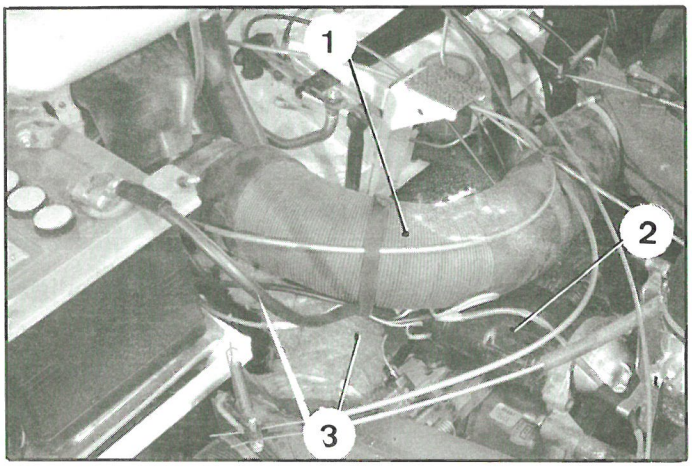

5313

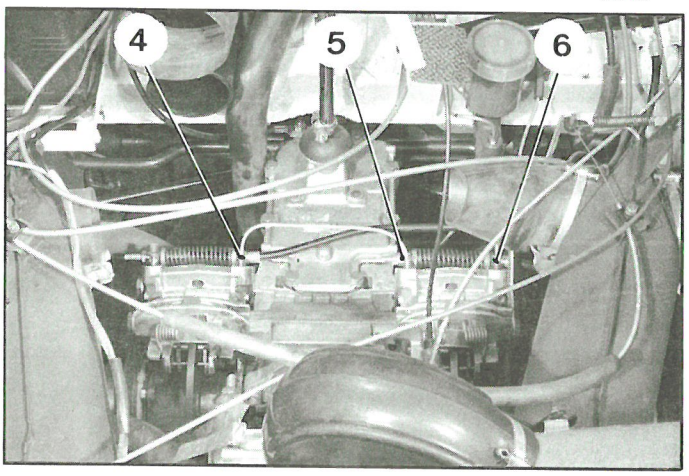

5317

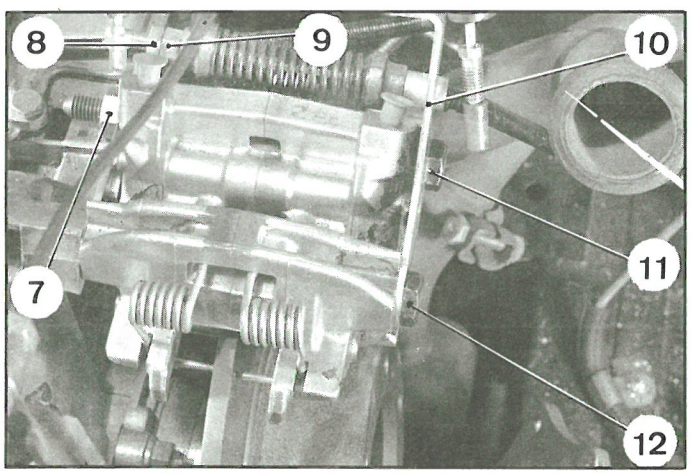

REMOVAL.

4. Disconnect the cable of the battery negative terminal.
Remove :
- heating duct (1),
- heating duct (3) *(to remove the R.H. caliper)*.
- starter (2) without disconnecting the leads (let it rest on the scuttle panel),
- main brake pads.

(See para 1 and 2 of the same operation).

5. **Remove the brake caliper :**

a) Uncouple the feed pipes.
- *R.H. caliper :* Uncouple union (4) and loosen union 5),
- *L.H. caliper :* Uncouple unions (5) and (6), loosen union (4) and release the tube of bracket (10).

Since the master-cylinder has no residual pressure valve, it is necessary after removing the caliper, to plug the orifices of the feed pipes, so as to avoid emptying the reservoir.

b) Get a (10 × 1.50) nut (7).
Remove bolt (11) fixing the rear part of the caliper.
Loosen by half a turn bolt (12) fixing the front part of the caliper and swing the complete caliper towards the front.
Refit bolt (11) in the caliper.
Fit and tighten nut (7) so as to maintain the two halves of the caliper together and to avoid leaks.
Remove bolt (12) fixing the front part of the caliper.
Uncouple the cable of the handbrake by removing locknut (8) and adjustment nut (9).
Release it through the L.H. side.

c) Release the caliper upwards, be careful not to drop the handbrake pads.

6. If necessary, recondition the caliper.

NOTE : After reconditioning the caliper, assemble the two halves of the calipers by means of bolt (11) and nut (7) (as for removal).

5317

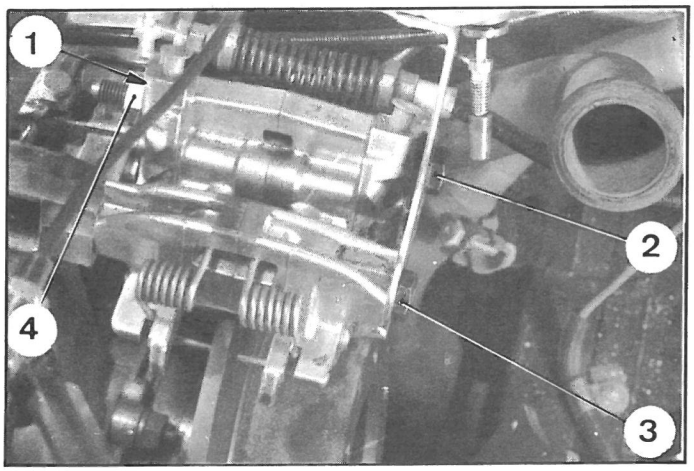

5513

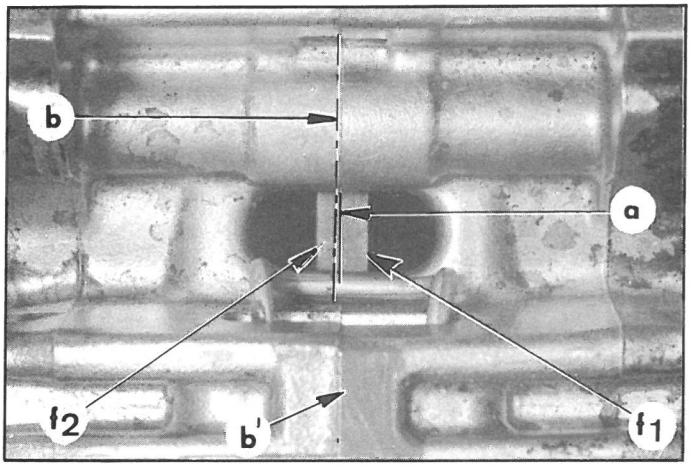

5313

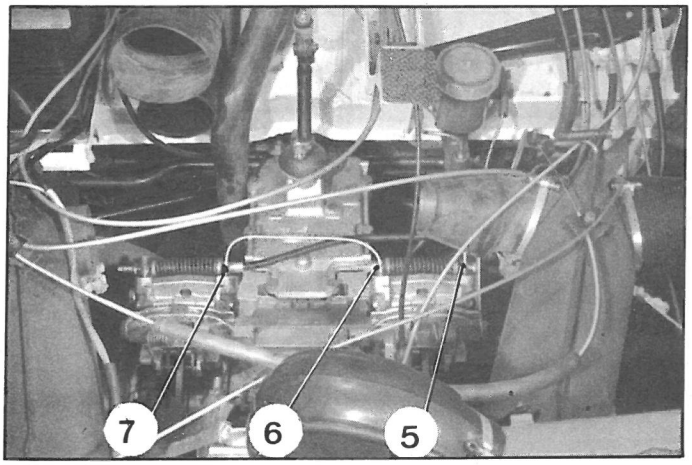

5311

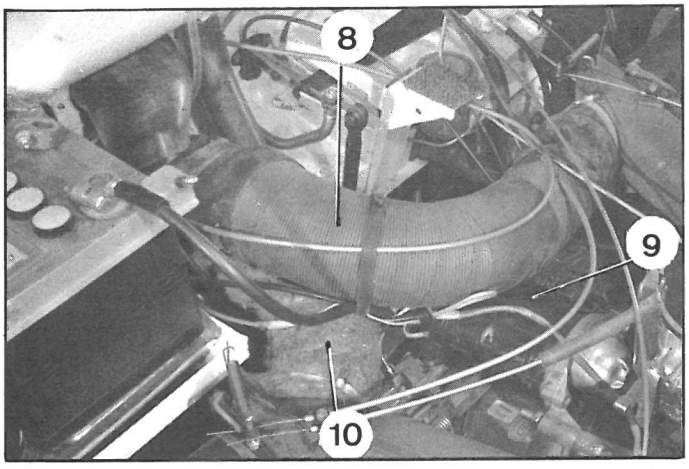

FITTING.

Shim (1) fitted between the caliper and the gearbox housing is used for adjusting the position of the caliper in relation to the disc.
When replacing a caliper, it is necessary to check this position, once the caliper is fitted.

7. Fit the brake caliper :

a) Check the condition of the bearing surface of the calipers on the gearbox housing. Eliminate the burrs using a scraper.

b) Position the caliper fully equipped and fitted with the original shim (1). (The two half-calipers being clamped together by means of bolt (2) and nut (4).
Keep the handbrake pads in position using a piece of rubber.

c) Fit front securing bolt (3) : fully tighten, and loosen it by half a turn approximately.
Remove nut (4) and swing the caliper towards the rear of the vehicle. Fit rear securing bolt (2) (plain washer under bolt head, R.H. side).
Check that shim (1) has been correctly positioned.
Tighten bolts (2) and (3) from **4.5 to 5 m.daN (33 to 36.8 ft.lbs)**. (greased threads).

d) Make an identification mark (a) on the disc at an equal distance from faces (1) and (2). Check that the mark is on the same line as seating surface (bb') of the two half-calipers.
The distance between the mark and the seating surface must not exceed 0.5 mm.

e) Fit the pads of the main brake.
(See the same operation , para. 3).

8. Adjust the free-play of the handbrake pads :
(See the relevant operation).

9. Connect the handbrake cable and adjust it :
(See the relevant operation).

10. Couple the feed pipes :
- *R.H. caliper :* couple unions (6) and (7),
- *L.H. caliper :* couple unions (6) and (7) and unions (5).

Tighten the unions from **0.8 to 0.9 m.daN (5.8 to 6.6 ft.lbs)** (at each time an operation is carried out, replace the sleeve seals).

Only use sleeve-seals identified by a green paint mark.

11. Bleed the brakes.

12. Fit :
- starter (9),
- heating pipes (8) and (10).

Connect the cable to the negative terminal of the battery.

5545

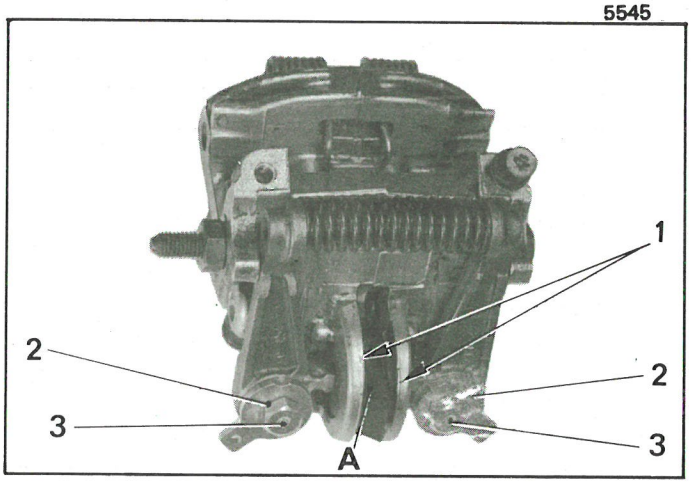

5514

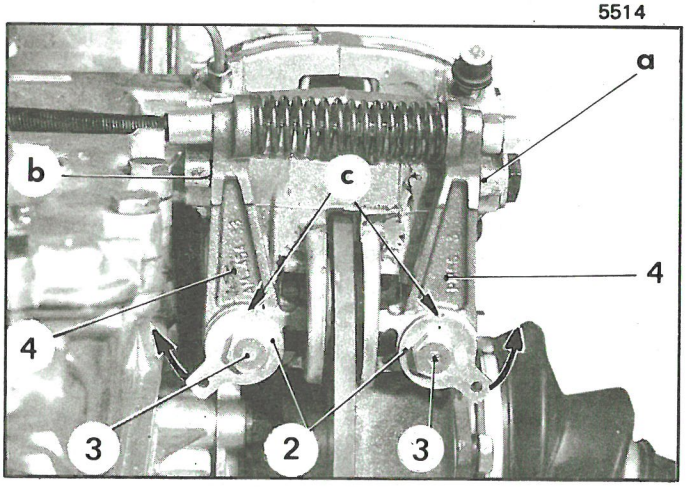

5515

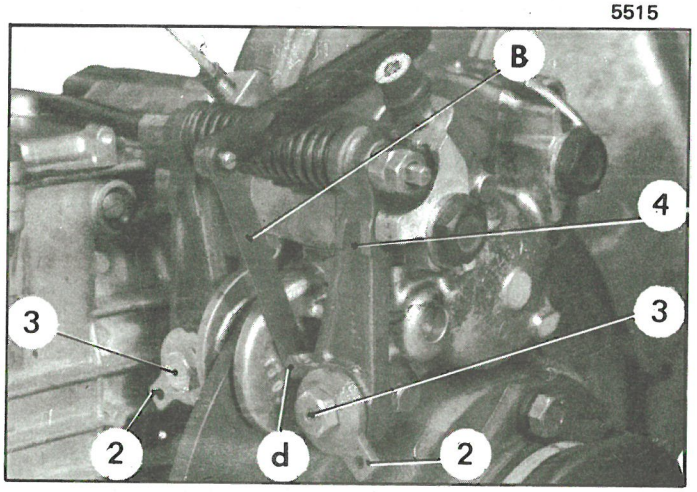

5628

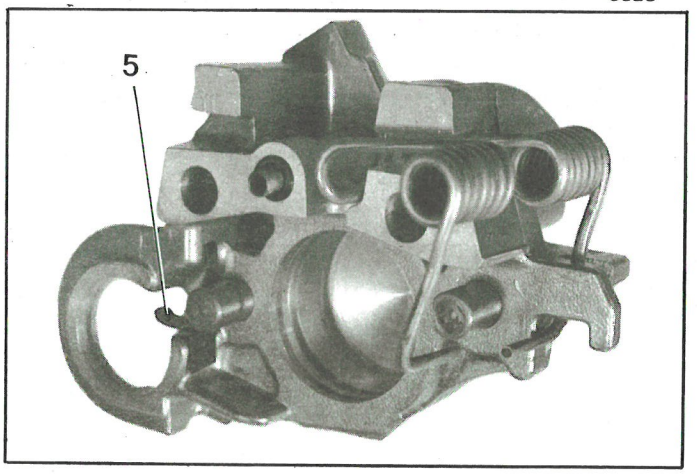

III. REMOVING AND FITTING THE HANDBRAKE PADS.

REMOVAL.

13. Push back the handbrake handle to its full extent.
Raise the vehicle and place it on stands.

14. **Remove the brake caliper :**
(see the same operation in para. 4 and 5).

15. Remove pads (1) and loosen bolts (3) of eccentrics (2)

NOTE : For even braking, the four pads must always be replaced together.

FITTING.

16. **Fit the pads :**

a) Fit pads (1).
b) Make sure that noise proof springs (5) are correctly positioned.
c) Place a piece of rubber (A) between the pads in order to hold them in position.

17. **Fit the brake caliper :**
(see the same operation, in para. 7 to 12).

18. **Adjust the pad free-play :**

a) Place eccentrics (2) as shown on the figure (with notches (c) directed upwards).
Make sure that levers (4) are in contact with their thrust bearing at (a) and (b).
b) Act upon eccentrics (2) (following the arrow direction) so as to obtain *a 0.05 mm free-play between the pad and heel (d) of lever (4) at the maximum run-out of the disc.* Measure this free play using a shim (B) (as shown on the figure).
Proceed in the same way for each pads.
c) Then, tighten securing bolts (3) **to 4 m.daN (29.4 ft.lbs)** making sure that eccentrics (2) do not rotate while tightening.

19. **Adjust the handbrake.**

20. Lower the vehicle to the ground.

IV. REMOVING AND FITTING A FRONT BRAKE DISC.

The thickness of a brake disc in the friction area must not be inferior to 4 mm.

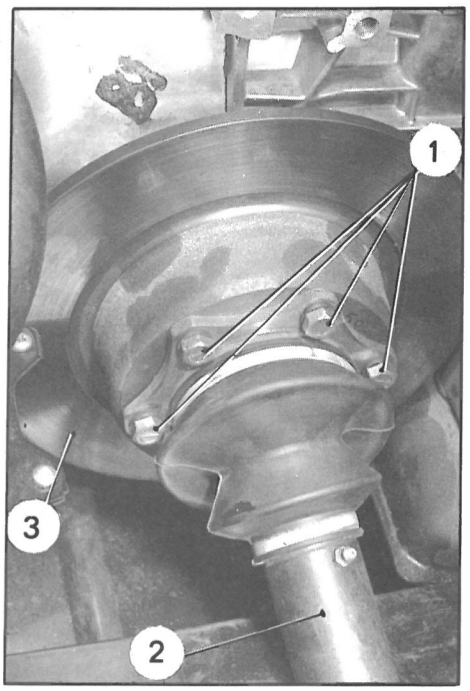

REMOVAL.

21. Raise the front of the vehicle and place it on stands.

22. Remove the brake caliper :
(See the same operation in para. 4 to 6). Take all the precautions indicated in these paragraphs.

23. Remove the brake disc :
Remove bolts (1) securing the drive-shaft unit
Remove drive-shaft unit (2).
Remove disc (3).

FITTING.

24. Fit the brake disc :
Fit disc (3) and drive-shaft unit (2).
Fit and tighten bolts (1) securing the unit from **4.5 to 5 m.daN (33 to 36.8 ft.lbs).**

25. Fit the brake caliper :
(See the same operation in para. 7 to 12).

26. Lower the vehicle to the ground.

I. REMOVING AND FITTING A BRAKE DRUM HUB
(or a bearing or sealing bush)

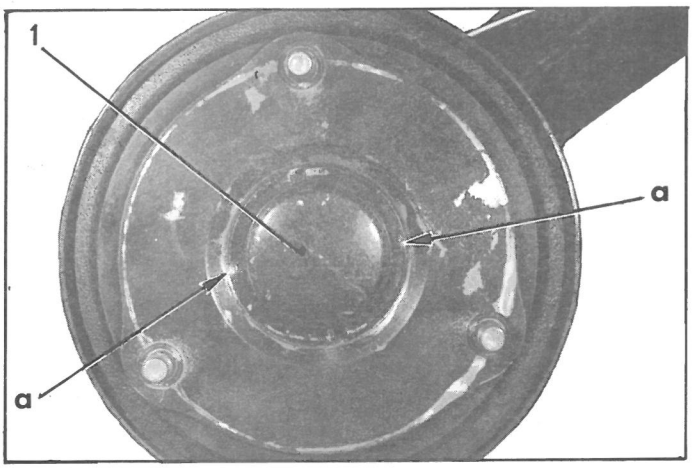

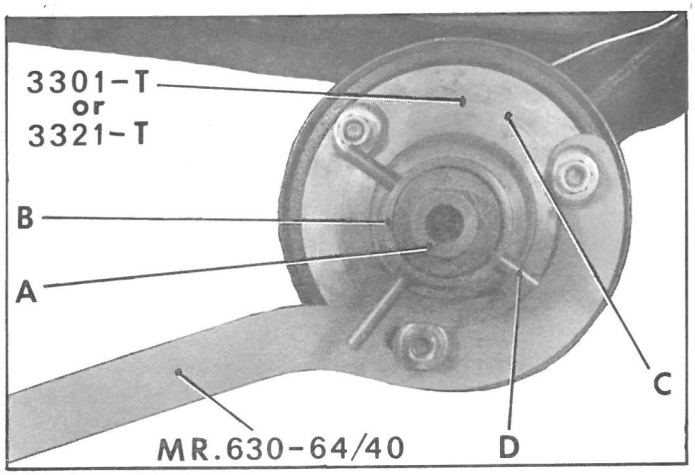

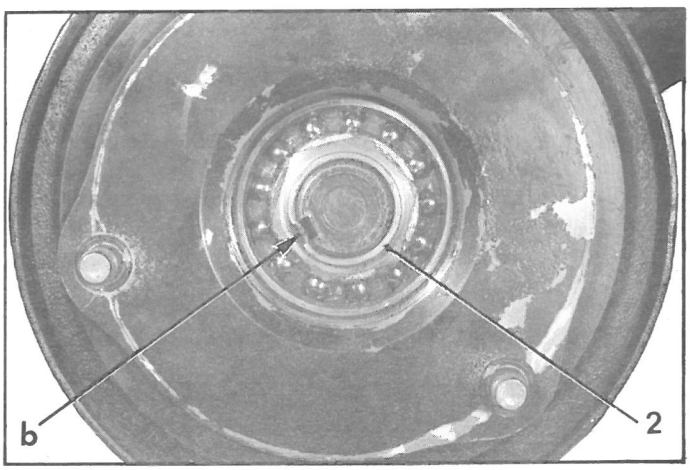

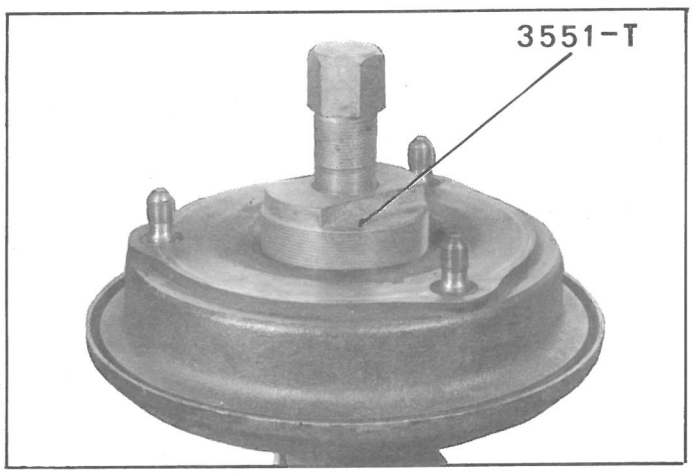

REMOVAL

1. Chock vehicle to height of rear axle.
Remove wheel on side where work is to be carried out.

2. **Remove drum hub :**

a) With drill 4 mm in diameter, drill out punch marks « a » which lock the cap nut (1).

b) Remove cap nut :
Use assembly 3301-T or 3321-T with spanner 3303-T or 3304-T and tool MR. 630-64/40 to hold drum.

Fix guide C and tool MR. 630-64/40 with the three wheel nuts. Engage the pins on spanner 3303-T or 3304-T into the slots on cap nut (1) then fit end-piece A.

Screw ring nut B until it contacts end-piece A without locking it.
Lock end-piece A and ring nut B assembly by means of a bar D.
Unscrew hub cap nut by unscrewing end-piece A.
Remove wheel nuts, tools and hub ring nut.

c) Using a drift turn up the metal knocked down at « b » into the stub axle groove.
Remove bearing locking nut (2).

d) Remove drum.
Use extractor 2003-T or 3551-T.

NOTE : The bearing inner race may remain on stub axle. Remove race with extractor 1750-T and assembly 1813-T composed of two shells and a ring.

If these tools are not available, use puller with separator 2405-T.

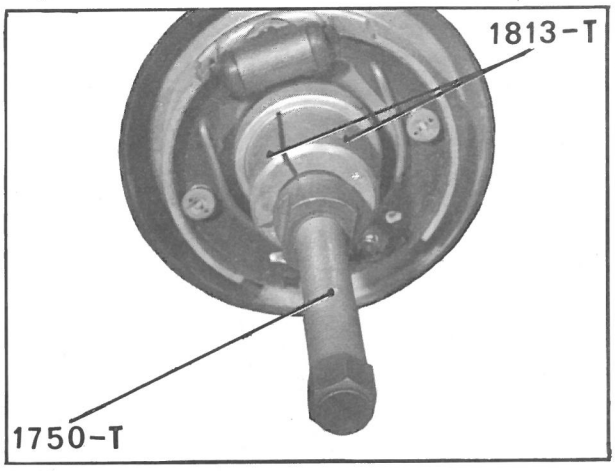

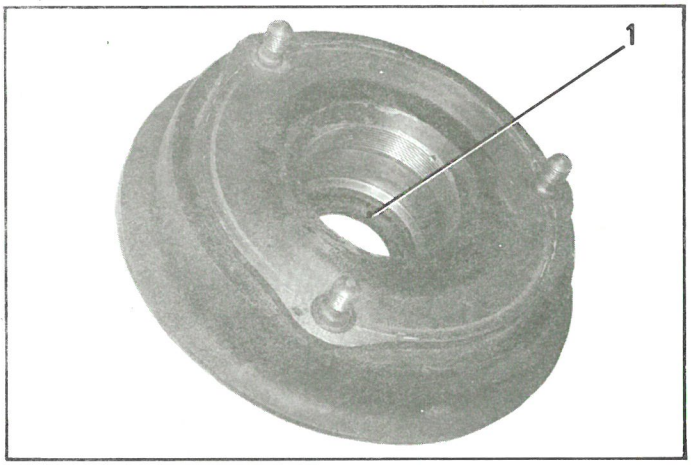

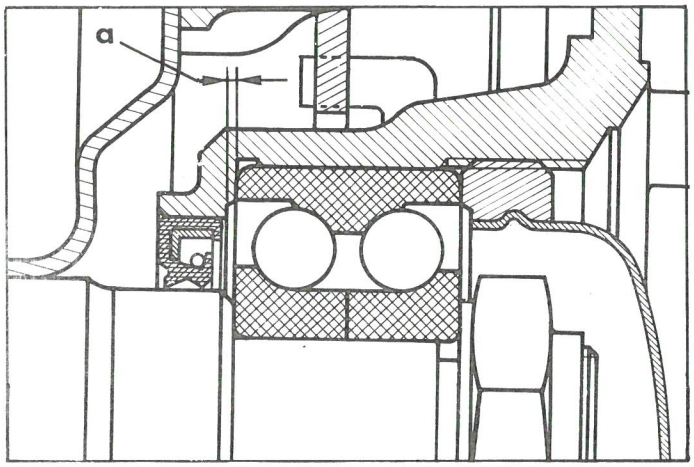

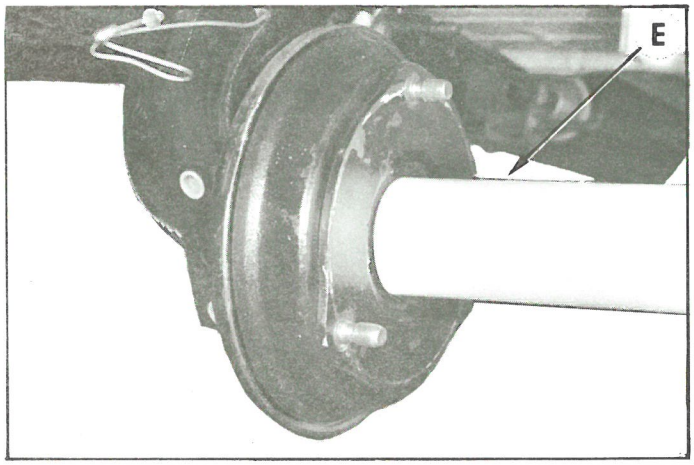

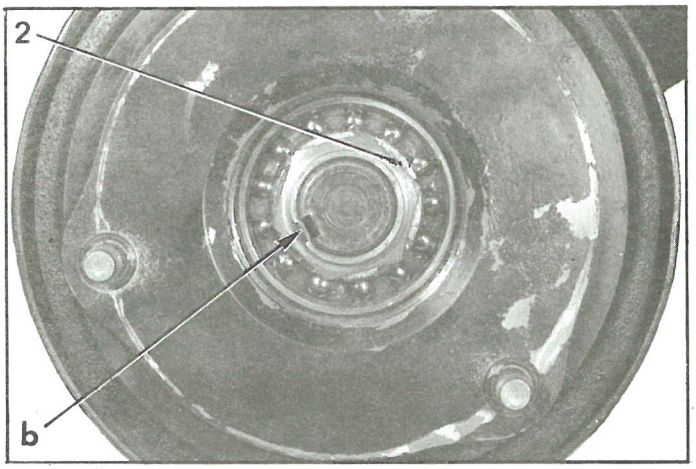

3. Remove, if necessary, bearing and sealing ring (1)
   Drive out :
   - bearing,
   - sealing ring

FITTING

4. Fit, if necessary, bearing and sealing ring (1)
   a) Position sealing ring with lip of joint towards bearing
   Sealing ring should be recessed at « a » by between 1 and 1.5 mm, from thrust flange of bearing
   b) Fit bearing :
   Grease bearing with TOTAL MULTIS MS and position it in hub bore, using a press, and a tube resting on outer race : tube : outside diameter = 75.5 mm, inner diameter = 72 mm, length = 100 mm

5. **Fit drum to arm :**
   a) Position drum bearing assembly on stub axle
   Use tube E resting on the inner race of the bearing (tube : inside diameter = 36.5 mm, outside diameter = 44 mm, length = 200 mm)
   b) Fit bearing locking nut (2) :
   This nut must be renewed after each dismantling. Tighten nut to 350 - 400 mN (35 to 40 m kg) (with face and threads greased)
   Using a drift fold down at « b » the lug of the nut into the stub axle groove « b ».
   c) Fit cap nut :
   Pack inner part of cap nut with grease (TOTAL MULTIS MS)
   Tighten cap nut.
   Use assembly 3301-T or 3321-T with spanner 3303-T or 3304-T and tool MR 630-64/40 to lock drum.
   Fix guide C and tool MR 630-64/40 with the three wheel nuts.
   Engage the two pins of spanner 3303-T or 3304-T into slots on cap nut, then fit end-piece A.
   Screw cap nut B until its contacts end-piece A without locking it.
   Lock end-piece A cap nut B assembly (using bar D). Tighten cap nut to 350 - 400 mN (35 to 40 m kg) (face and threads greased) and lock with two diametrically opposed punch marks.

6. Adjust brake shoes, if necessary.
7. Bleed brakes, if necessary.
8. Fit wheel. Lower vehicle to ground.

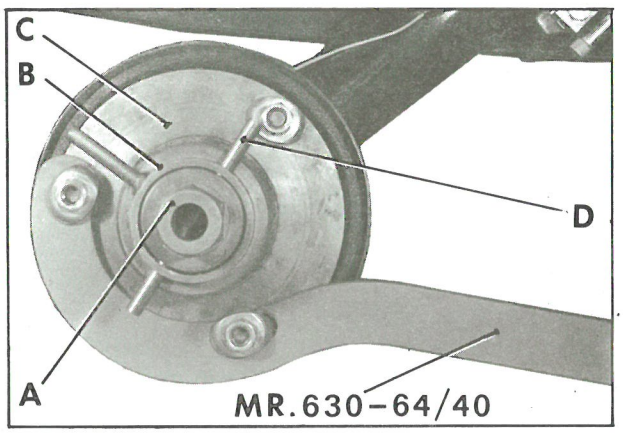

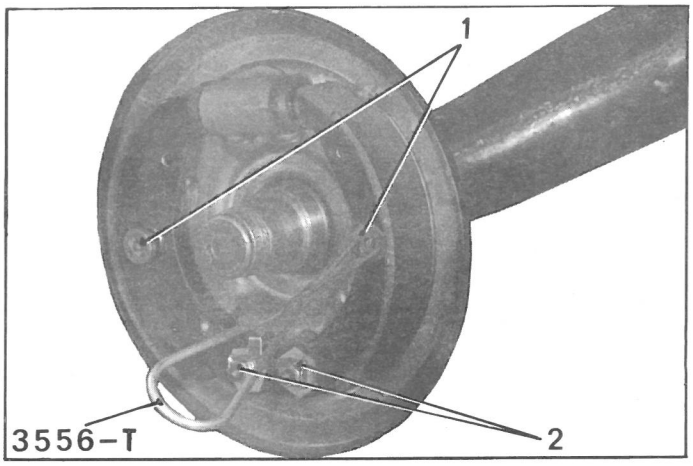

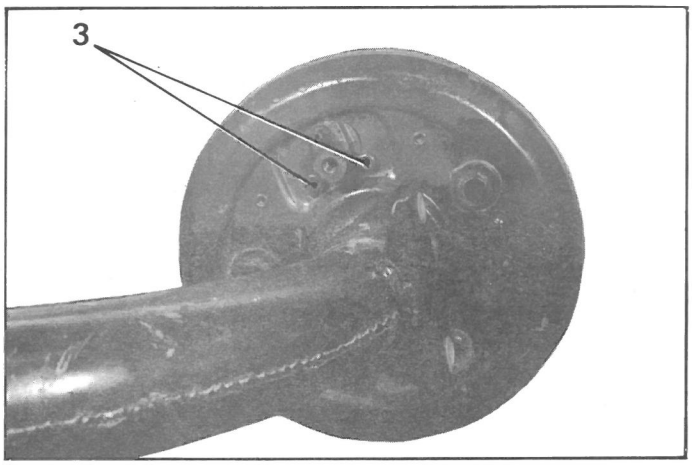

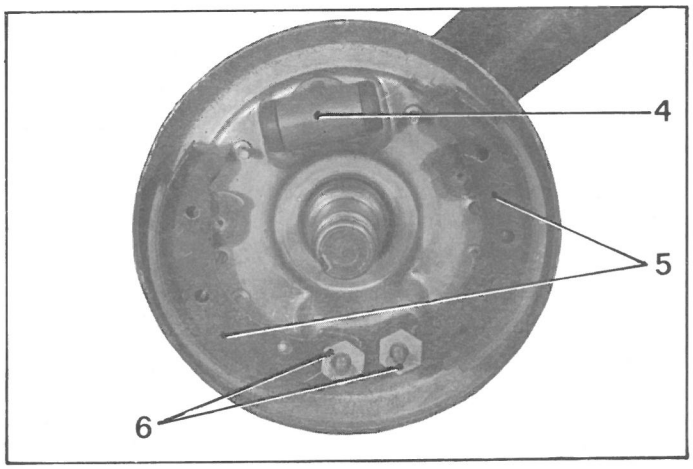

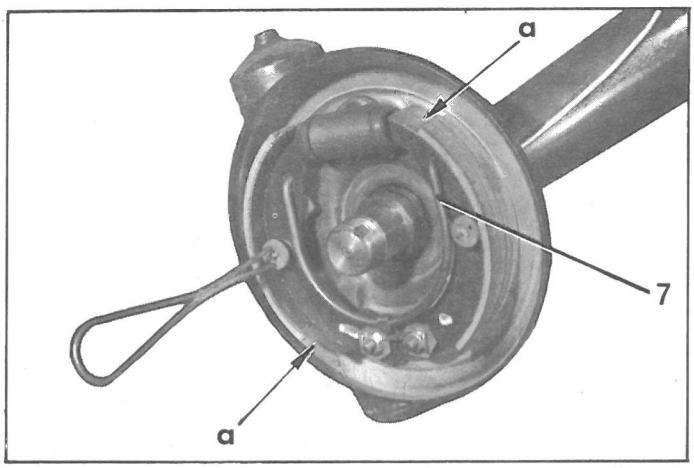

IMPORTANT : To maintain an even braking distribution it is necessary to renew all four shoes at the same time. The surface of the drums should also be in identical condition.

REMOVAL

1. Remove rear drum hub :
(See relevant operation).

2. Removing brake shoes :
a) Free brake shoe return spring (7).
b) Remove thrust spring retaining caps.
Compress each spring and turn cap one quarter turn. Free caps, springs and spring guide rods (use tool 3556-T).
c) Release double lock washer and remove nuts (2) from ancher pins.
Free double lock washer.
d) Remove brake shoes.

3. Remove, if necessary, wheel cylinder (4) :
Remove bleed screw protective cover.
Disconnect brake piping from wheel cylinder.
Remove fixing screws (3).
Remove wheel cylinder.

FITTING

4. Fit, if necessary, wheel cylinder (4) :

Position wheel cylinder and fit the two fixing screws (3) (spring washers).
Connect brake piping to wheel cylinder (new sealing sleeve).
Tighten union nut to 8 - 9 mAN (0.8 to 0.9 m.kg).

5. Fit brake shoes (5) :

NOTE : There is a surface area in « a » on the face of each shoe which is not covered by the lining.
The shoe with surface area « a » on the upper part is fitted to the front and shoe with surface area « a » on lower part is fitted at the rear.

a) Position brake shoes on flange.

b) Lightly grease eccentrics (6) and fit them.
Fit double lock washer.
Fit and tighten provisionally fixing nuts.

c) Position spring guide rods, thrust springs and retaining caps (1). Lock this assembly by placing the caps on rods and turning them a quarter turn (use tool 3556-T). Check that shoes move freely.

d) Hook up return spring (7).

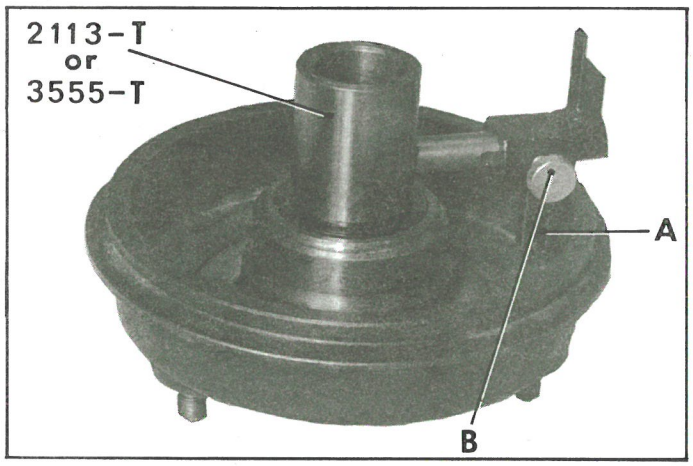

6. **Centring the brake shoes :**

a) Measure diameter of drum :
Position fixture 2113-T or 3555-T in drum.
Set index A in contact with bore of drum and lock in position with locking screw B.

b) Centre brake shoes :

Fit fixture 2113-T or 3555-T on hub end journal of arm.
Centring is correct when index A just touches linings throughout their travel.
Obtain this position by working successively on the eccentrics of the fixed points, and the adjusting cams.

c) Remove fixture, then tighten fixed point nuts and lock them.
Loosen brake lining adjusting cams to facilitate fitting of drum.

7. **Fit brake drum.**

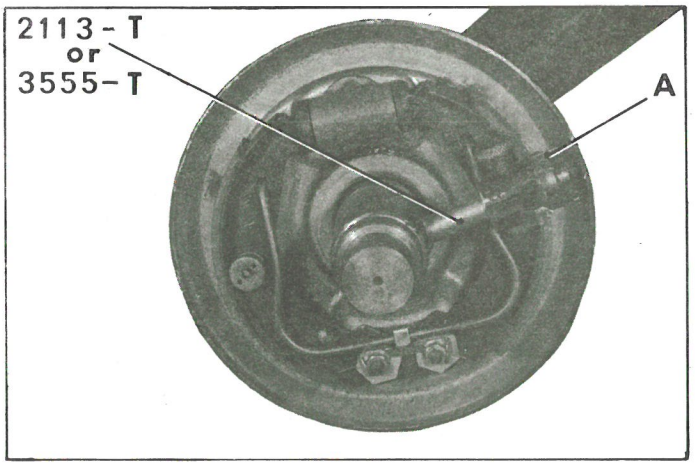

8. **Adjust cams :**

(See relevant operation).

9. Fit wheel and lower vehicle to ground.
Tighten wheel nuts.

10. If necessary, bleed brake line piping.

LIST OF SPECIAL TOOLS MENTIONED IN THE FIRST SECTION OF MANUAL 816-2

NOTE : Tool numbers marked with an asterisk (*) are no longer sold by the FENWICK Company and should be made according to relevant MR. drawings.

DESCRIPTION	NUMBER Methods - Repairs	REFERENCE of tool on sale
(1) GENERAL		
Support for raising a vehicle on jack	MR. 630-41/3	
(2) ENGINE		
Spanner for screws with flats (6 × 9 across flats)		1677-T
Sparking plug spanner		1601-T
Piston ring fitting fixture (66 mm dia.)		1654-T
Piston ring fitting fixture (68.5 mm dia.)		3063-T
Piston ring fitting fixture (74 mm dia.)	MR. 630-65/7	* 3002-T
Piston ring fitting fixture for U-FLEX rings (74 mm dia.)		3010-T
Mandrel for fitting rear bearing seal (48 mm dia)	MR. 630-34/25	* 3007-T
Mandrel for fitting rear bearing seal (52.5 mm dia)		3004-T
Mandrel for fitting rear bearing seal (56 mm dia.)		3007-T bis
Valve spring compressor (Replaces 1613 T)		3084-T
Expander for setting push-rod sleeves (2 CV 425 cc)		1605-T
Expander for setting push-rod sleeves (2 CV 435 cc)		3005-T
Expander for setting push-rod sleeves (3 CV 602 cc)		3036-T
Chain hoist for lifting engine-gearbox assembly	MR. 630-44/4	* 1619-T
Fan extractor		3006-T bis
Elbowed ring-spanner (12 mm) for carburettor		3081-T bis
Spanner for nuts coupling engine-gearbox assembly (17 mm)		1791-T
Extractor for needle cage locating main shaft (end-piece dia. = 12 mm)		1671-T
Mandrel for fitting self-lubricating bush on crankshaft		3052-T bis
Mandrel for fitting crankshaft needle cages	MR. 630-31/40	
Engine-gearbox support clamp	MR. 630-41/20	
Gudgeon pin extractor	MR. 630-23/16	
Instrument for checking the vacuum in the engine casing	MR. 630-56/9 a	
Spanner for cooler union nut	MR. 630-11/18	
Extractor for sealing rings front and rear on crankshaft	MR. 630-22/10	
(3) (4) CLUTCH - GEARBOX		
Straight-edge for dial-gauge used in adjusting clutch drum position		1755-T
Adjusting bush for clutch drum		3101-T
Dial gauge		2437-T
Mandrel for centring clutch disc (splined)		1713-T
Mandrel for centring clutch disc (toothed)	MR. 630-31/10	
Mandrel for grinding clutch drum	MR. 630-35/8	
Mandrel for grinding engine flywheel	MR. 630-35/9	
(5) DRIVE SHAFTS		
Holding lever for front and rear hubs	MR. 630-64/40	
Extractor for constant velocity joint protective cups	MR. 630-21/17	3251-T

LIST OF SPECIAL TOOLS MENTIONED IN THE FIRST SECTION OF MANUAL 816-2

DESCRIPTION	NUMBER Methods - Repairs	REFERENCE of tool on sale
(7) (8) FRONT AND REAR AXLES		
Socket spanner for TIMKEN bearing on suspension arm		1833-T
Spanner for removing and fitting friction dampers		3451-T bis
Puller with separator		2405-T
Press for replacing kingpin on vehicle	MR 630-22/14	* 1858-T
Assembly for front and rear hub nuts		3321-T or 3301-T
Castellated socket for 2-slot nut of front hub bearing and rear hub sealing plug		3303 T and 3304-T
Spanner for interior nuts on steering ball joints	MR 630-16/2	
Mandrels for fitting crossmember bearings	MR 630-31/54	
Mandrel for removal of front hubs	MR 630-31/39	
Mandrel for fitting hub bearings and hub gaskets	MR 630-31/55	
(9) SUSPENSION		
End-piece for under body height adjustment (9 mm A/F)		3455-T or 3455-T bis
Spanner for adjusting end-piece (to be used with end-piece 3455-T)		3456-T
End-piece for holding suspension unit adjusting end-pieces in place		3458-T
Spanner for suspension unit end piece adjusting nut (50 mm A/F)		3453-T or 2186-T
(10) STEERING		
Track rod extractor		3502-T
Pad for track rod extractor		1965-T
Anti-theft device nut extractor (screw 7 mm dia)		2412-T
Anti-theft device nut extractor (screw 9 mm dia)		3902-T bis
Lever for removal of steering column	MR 630-27/6	* 1951-T
(11) BRAKES		
Tool for thrust spring cups on brake shoes		3556-T
Rear brake lining centring tool		2113-T
Rear brake lining centring tool		3555-T
Front brake shoes centring fixture		3570 T
Tool for positioning « spiral » type tube	MR 630-66/17	
Dolly for rivetting brake cams	MR 630-62/13	
Rivet-snap to rivet brake cams	MR 630-62/11	
(12) ELECTRICAL SYSTEM		
Battery terminal extractor		2200-T
Dynamo armature extractor (6 volts)		2205-T
MISCELLANEOUS		
« POP » rivetting pliers		2669-T

MR. 630-41/3

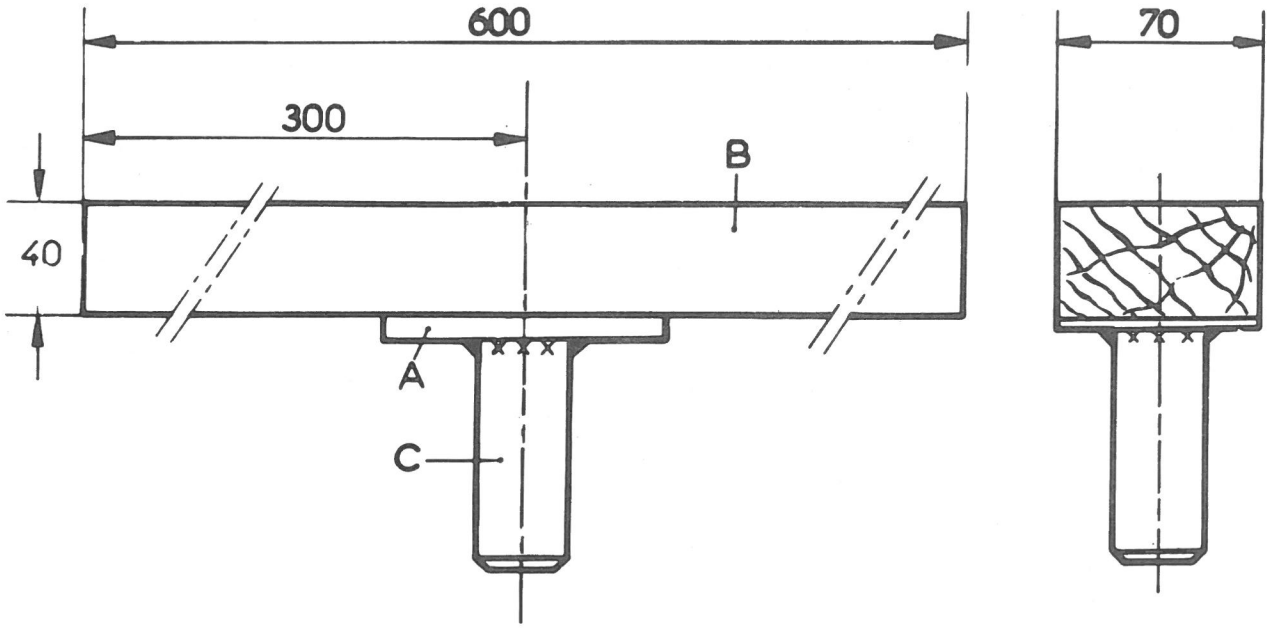

Detail of plate A

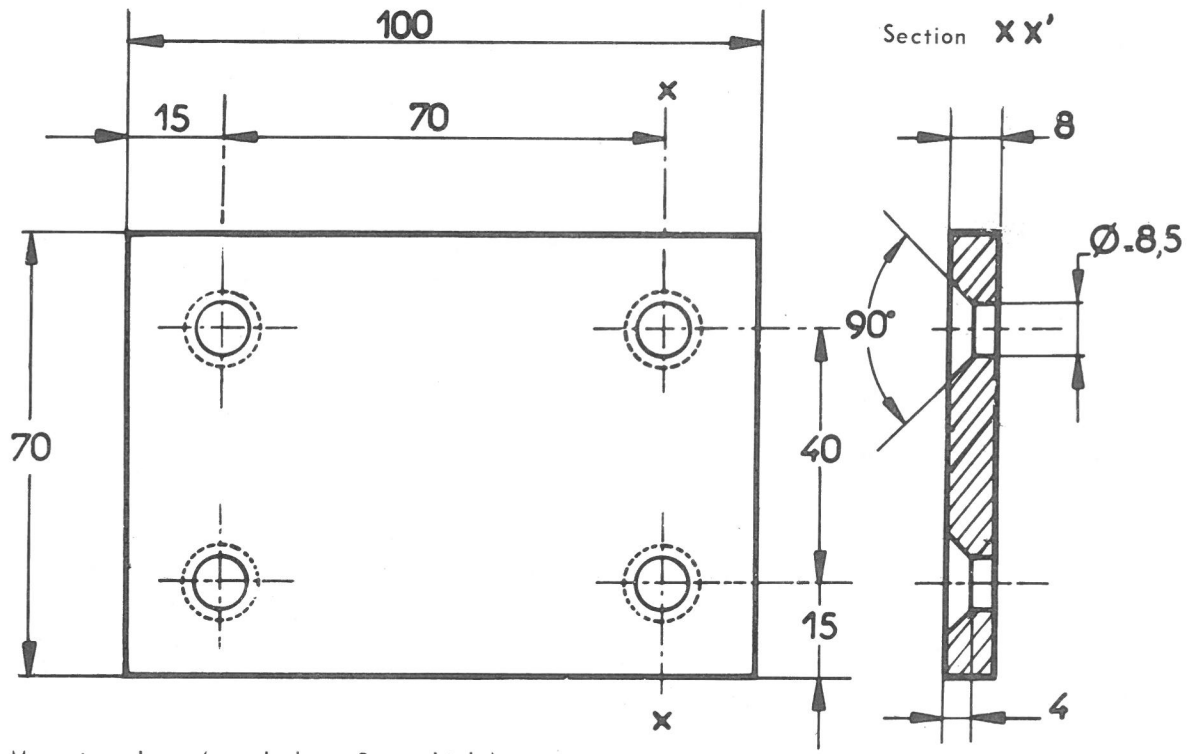

A - Mounting plate, (steel plate, 8 mm thick)

B - Oak beam 40 × 70 mm, length 600 mm, grain length wise

C - Drawn steel, height and diameter according to jack

- Fixed by 4 countersunk head screws, diameter 8 mm, length 40 mm

MR 630_44/12

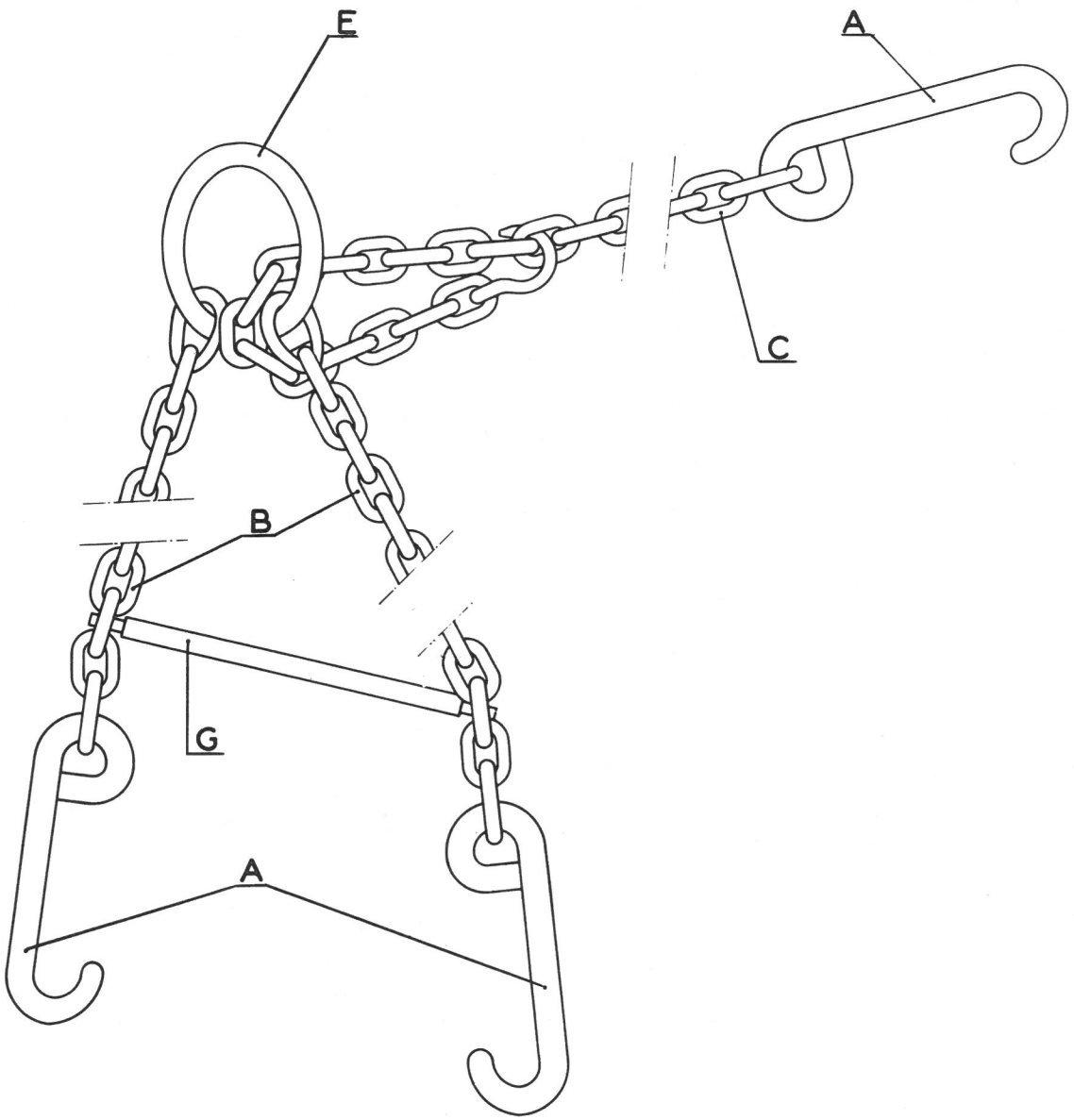

MR 630 _44/12

Ref	Qty	Material	Sketch
A	3	Mild steel dia. 14 developed length 408	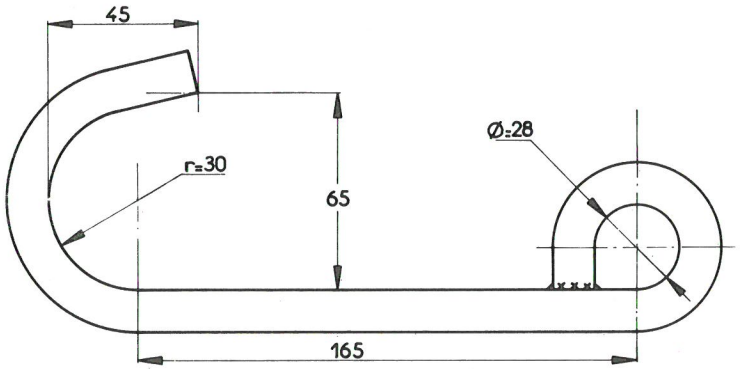
B	2	Chain Ø= 6	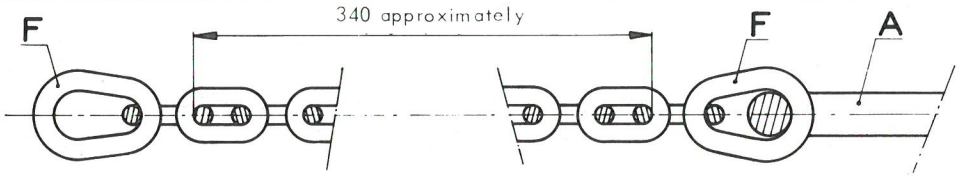
C	1	Chain Ø=6	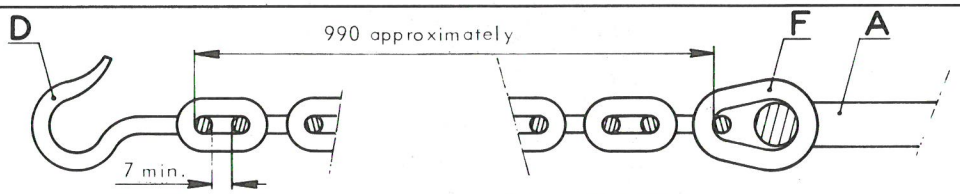
D	1	Mild steel Ø=6	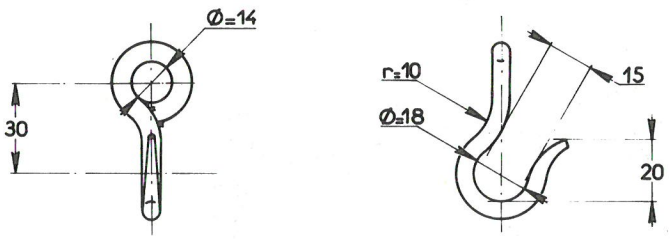
E	1	Mild steel Ø=10	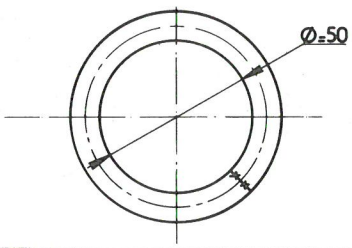
F	5	Mild steel Ø= 7	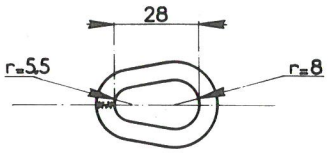
G	1	a tube 12 · 17 b dia. 6	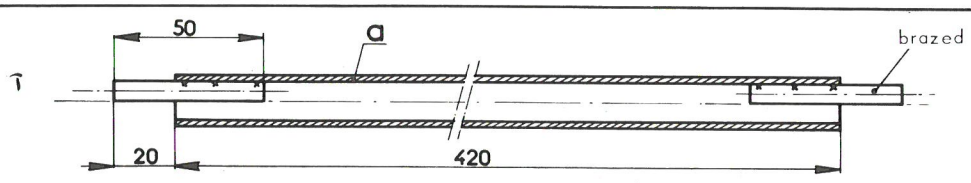

MR.630-22/10
ex:MR.3404-70

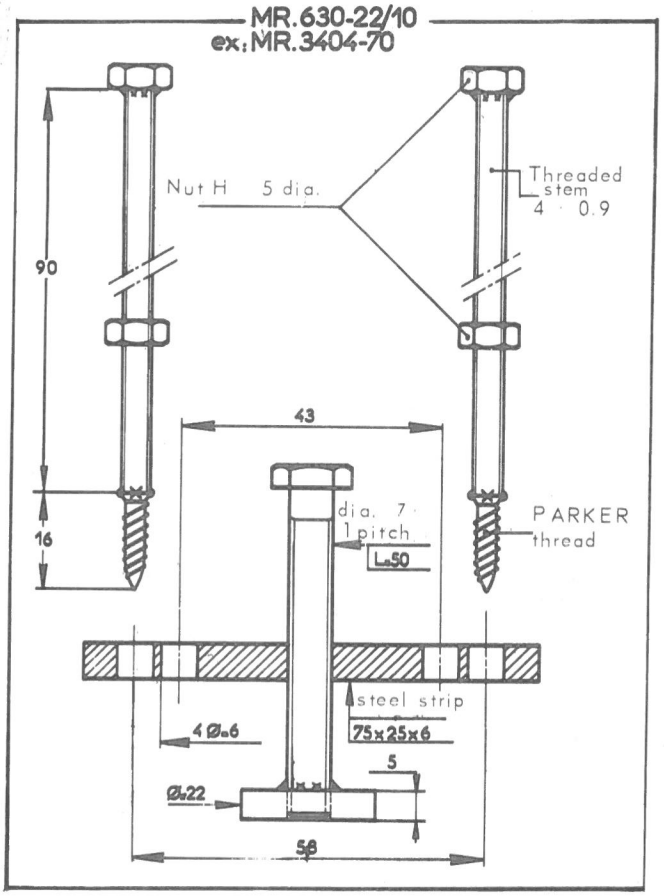

MR.630_11/18
ex:MR.3422-120

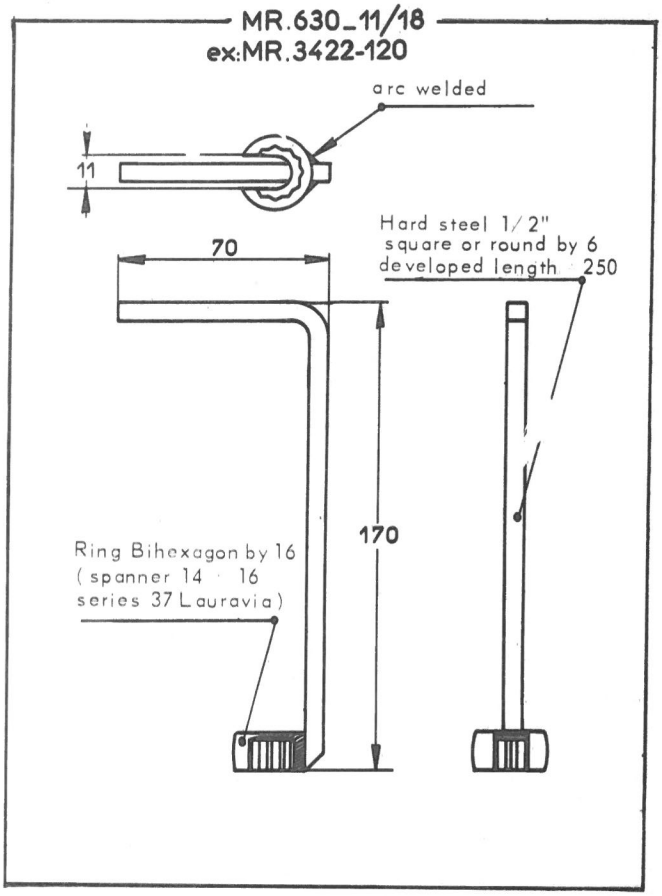

MR.630-41/20
ex:MR.3300-310

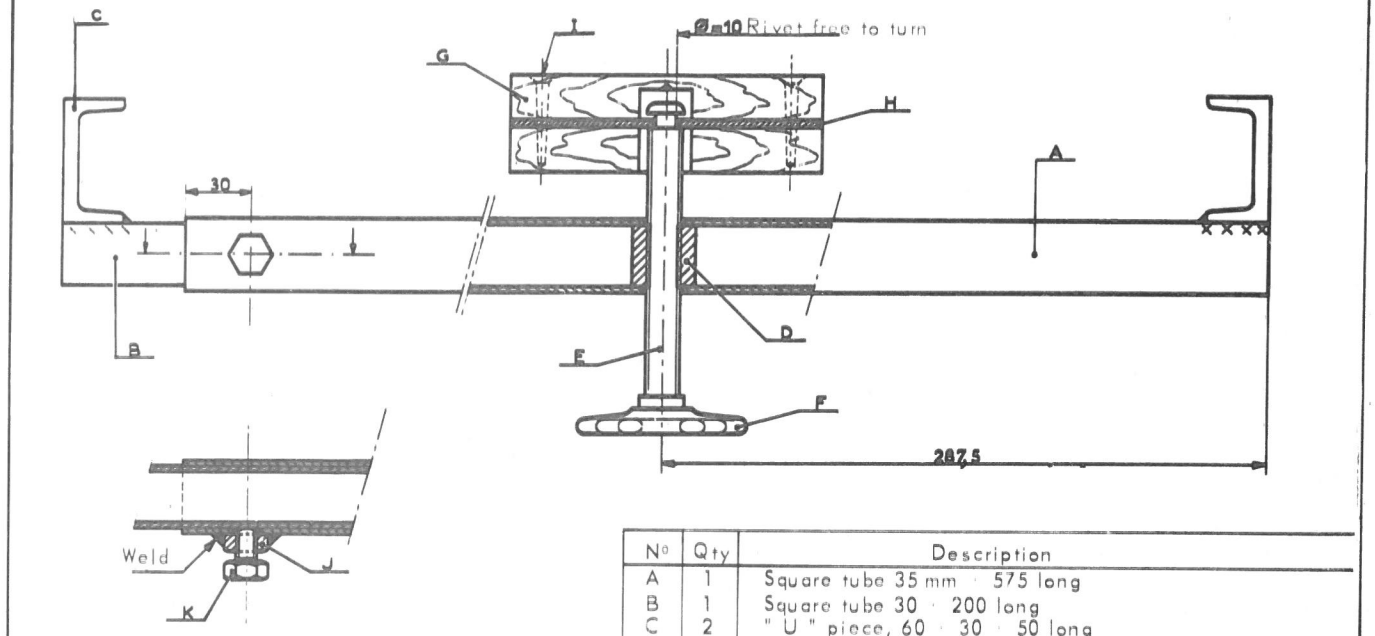

N°	Qty	Description
A	1	Square tube 35 mm · 575 long
B	1	Square tube 30 · 200 long
C	2	" U " piece, 60 · 30 · 50 long
D	1	Square nut · 30
E	1	Threaded rod 160 long
F	1	Wheel or other driving part (nut, lock nut, drill, etc,)
G	2	Wood block 150 · 90 · 22
H	1	Metal sheet 3 · 150 · 90
I	4	Wood screw 45 long
J	1	Nut
K	1	Screw

MR.630_23/16
ex: MR.3682-120

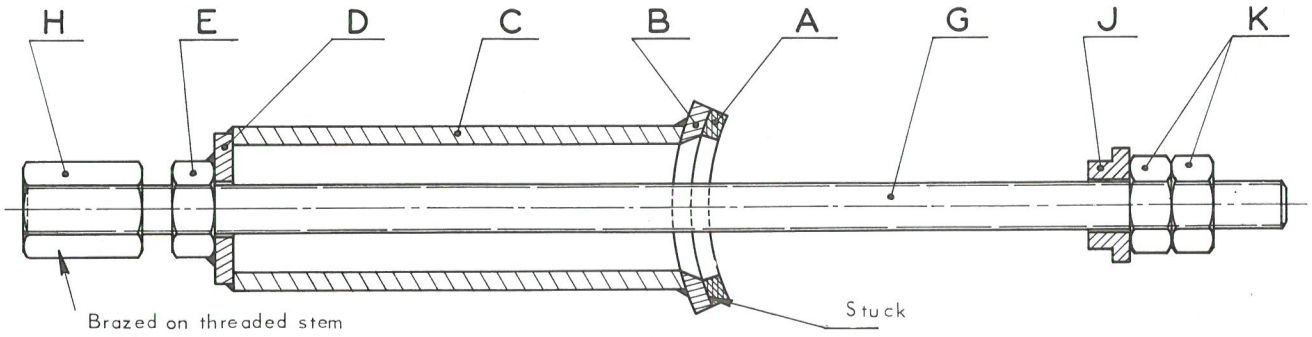

Ref	Qty	Material	Size	Sketch
A	1	leather	ϕ=34 3 thick	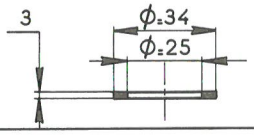
B	1	1/2 hard steel	ϕ=34 =3 3 thick	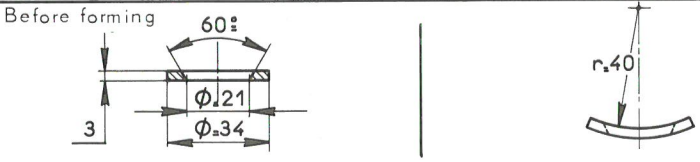
C	1	tube21x27	L.=75	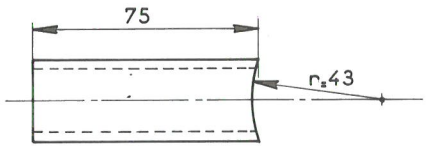
D	1	steel strip 25x3	L.=30	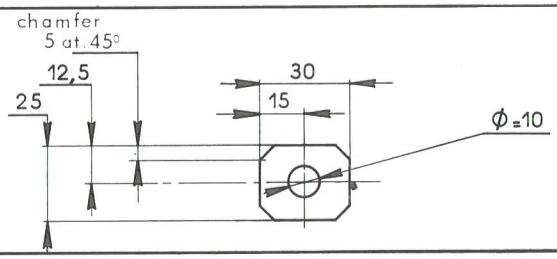
E	1	steel	ϕ=8x1,25	standard nut
G	1	threaded stem ϕ=8x1,25	L.=225	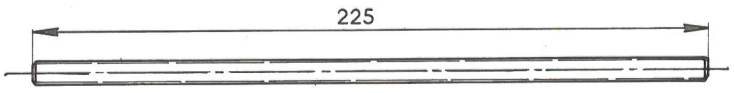
H	1	1/2 hard steel	14 A/F L.=20	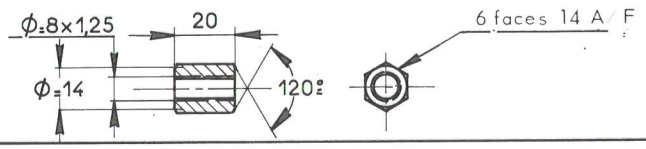
J	1	1/2 hard steel	ϕ=19 7 thick	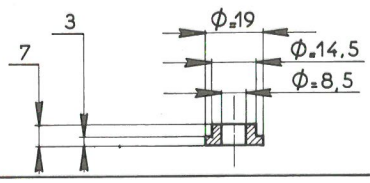
K	2	steel	ϕ=8x1,25	standard nut

MR 630_56/9a

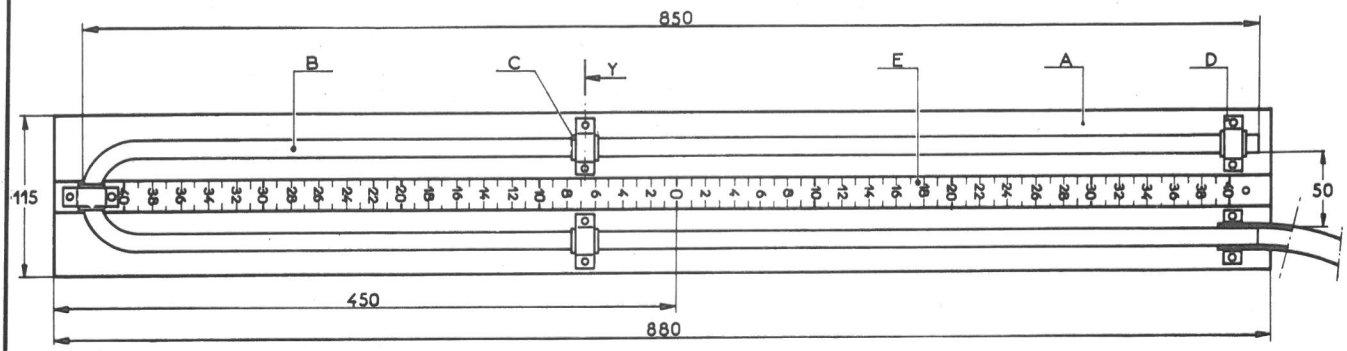

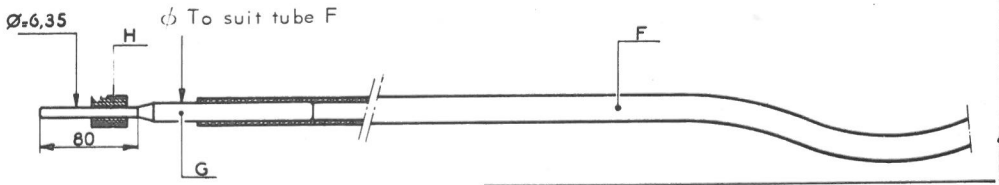

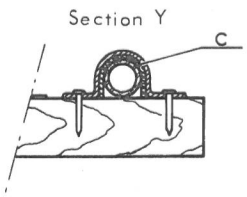

N°	Qty	Description
A	1	Base, thickness 20
B	1	Tube in glass or plastic
C	4	Rubber protector
D	5	Clip
E	1	Scale
F	1	Flexible tube to suit B dia.
G	1	Tubular end piece
H	1	Gasket NN 394-87

MR.630-31/46

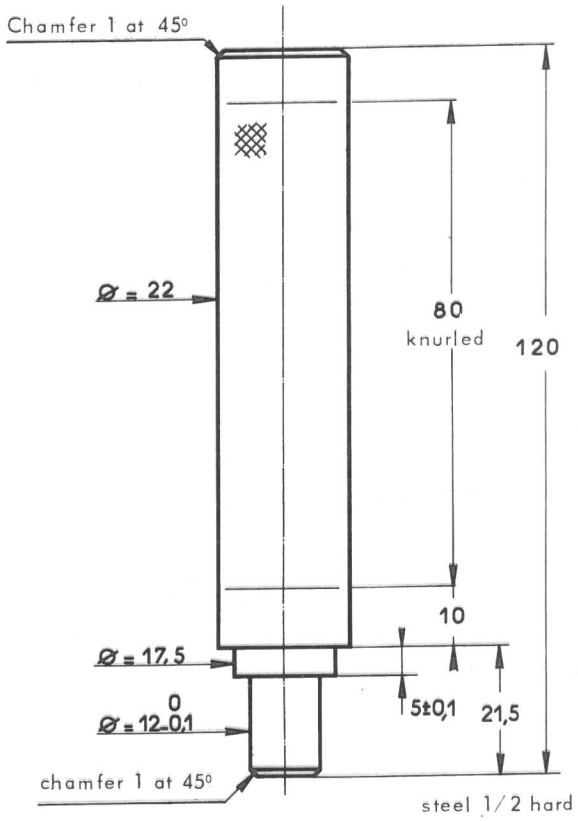

MR 630-65/7

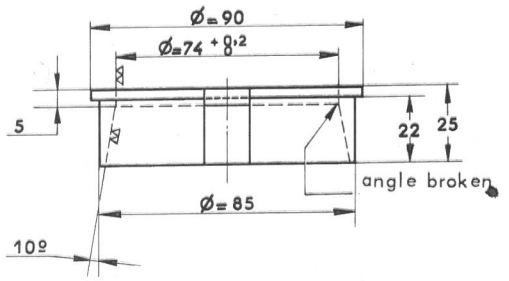

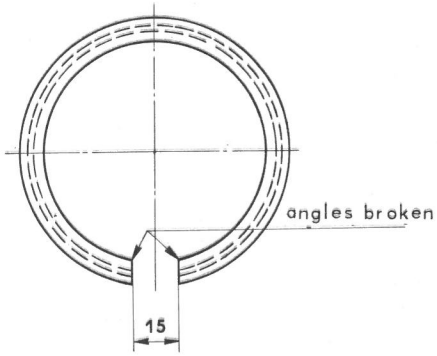

Half hard steel

MR. 630 - 34/25

MANDREL AND PAD FOR FITTING CRANKSHAFT REAR BEARING SEAL

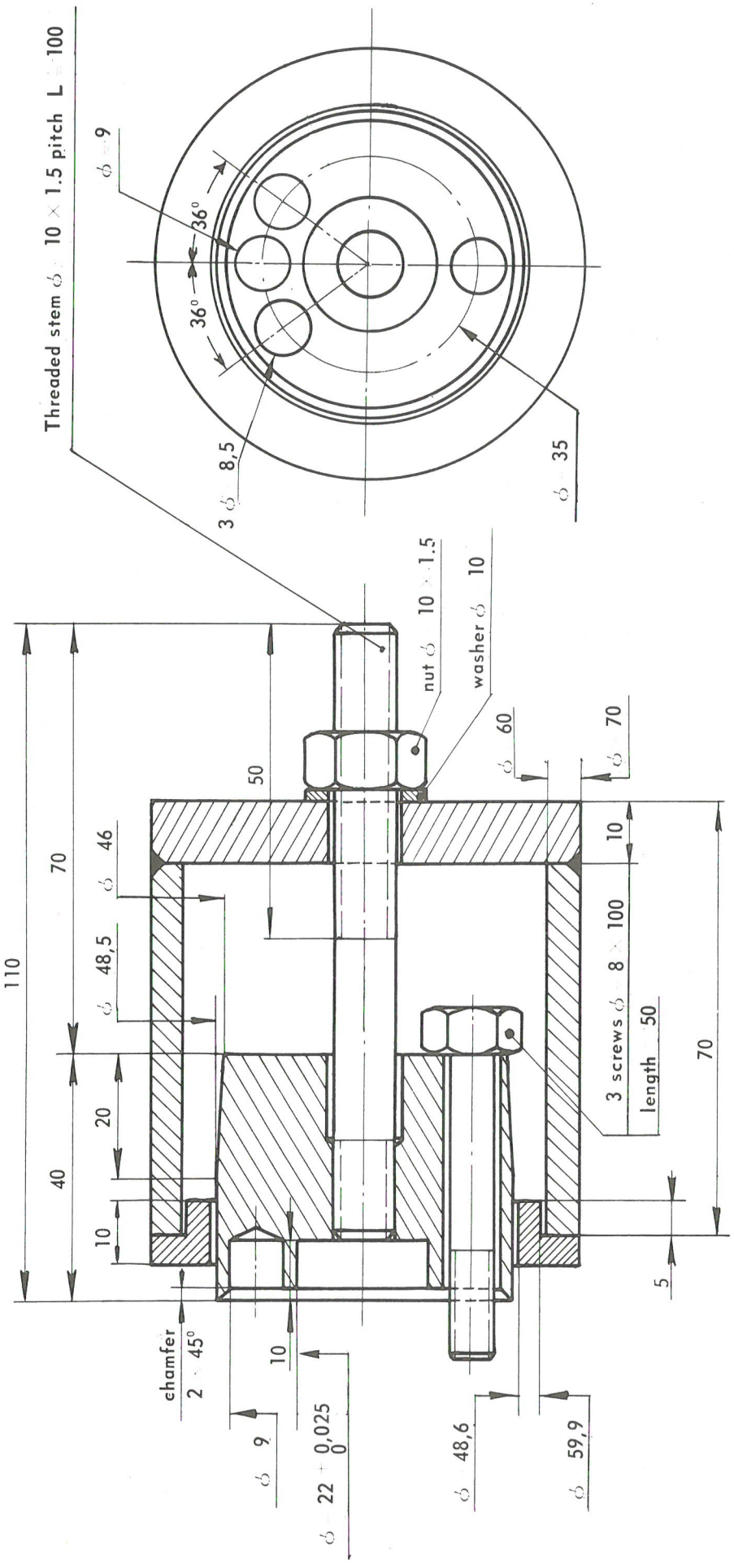

Half hard steel

MR. 630-31/10
ex : MR. 1620-40

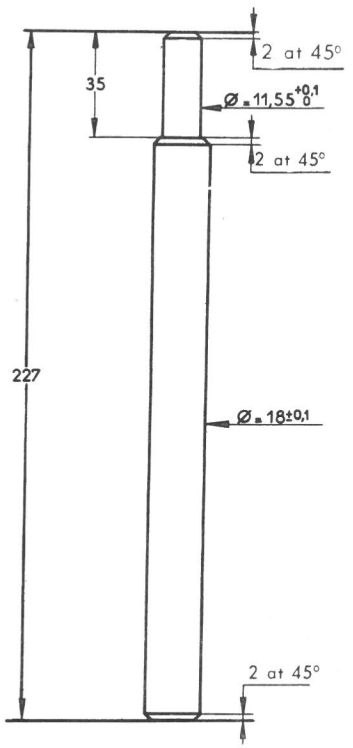

Drawn steel C 35

MR. 630-35/8
ex : MR. 3700-100

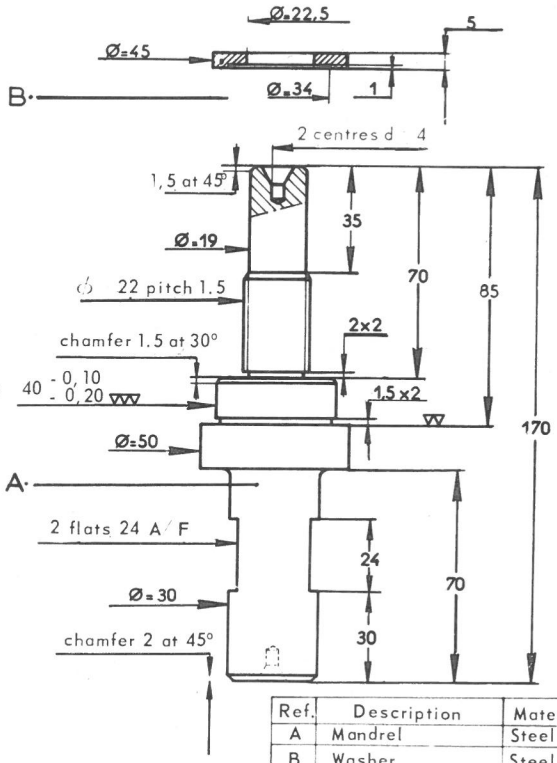

Ref.	Description	Material
A	Mandrel	Steel C 35
B	Washer	Steel C 35
C	Nut 22 diax 1.5	

Machined all over

MR. 630-35/9
ex : MR. 3700-110

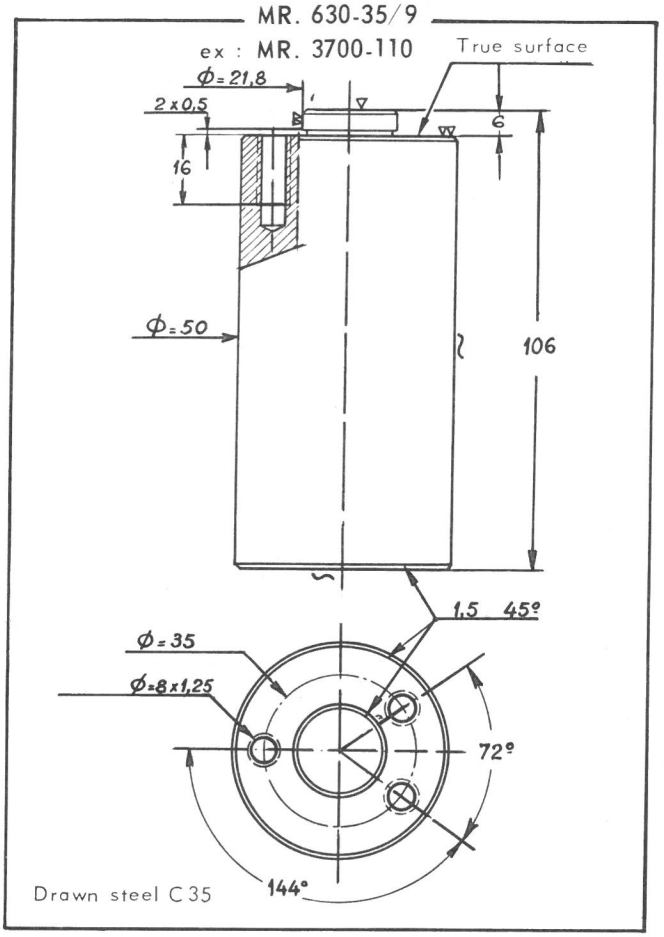

Drawn steel C 35

MR 630-21/17

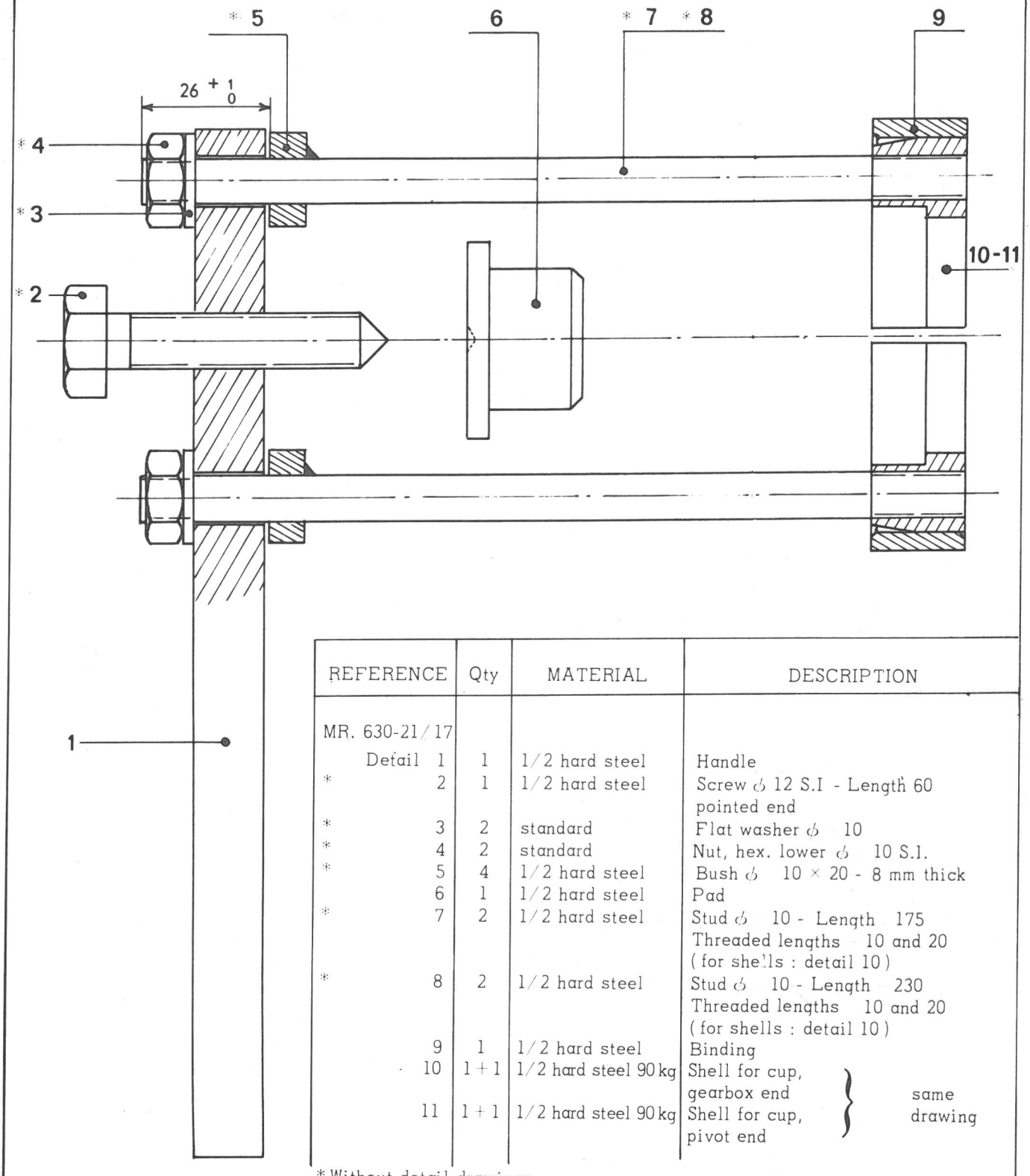

REFERENCE	Qty	MATERIAL	DESCRIPTION
MR. 630-21/17			
Detail 1	1	1/2 hard steel	Handle
* 2	1	1/2 hard steel	Screw ⌀ 12 S.I - Length 60 pointed end
* 3	2	standard	Flat washer ⌀ 10
* 4	2	standard	Nut, hex. lower ⌀ 10 S.I.
* 5	4	1/2 hard steel	Bush ⌀ 10 × 20 - 8 mm thick
6	1	1/2 hard steel	Pad
* 7	2	1/2 hard steel	Stud ⌀ 10 - Length 175 Threaded lengths 10 and 20 (for shells : detail 10)
* 8	2	1/2 hard steel	Stud ⌀ 10 - Length 230 Threaded lengths 10 and 20 (for shells : detail 10)
9	1	1/2 hard steel	Binding
10	1 + 1	1/2 hard steel 90 kg	Shell for cup, gearbox end } same drawing
11	1 + 1	1/2 hard steel 90 kg	Shell for cup, pivot end } same drawing

* Without detail drawings

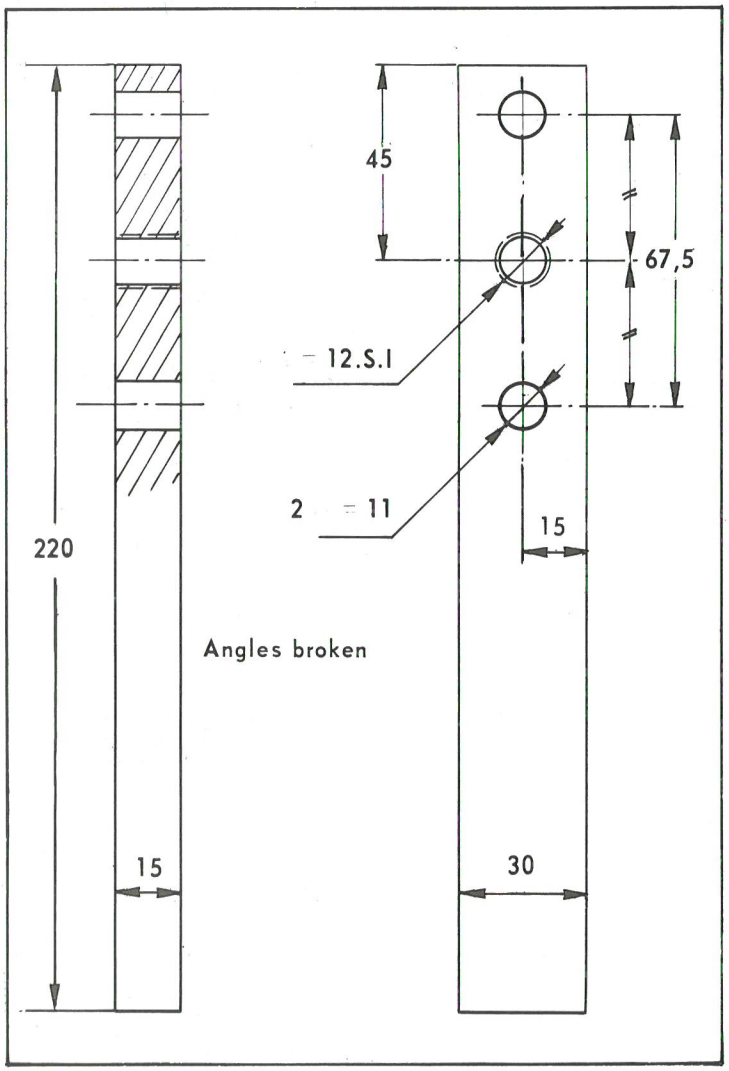
45
67,5
12.S.I
2 = 11
15
220
Angles broken
15
30

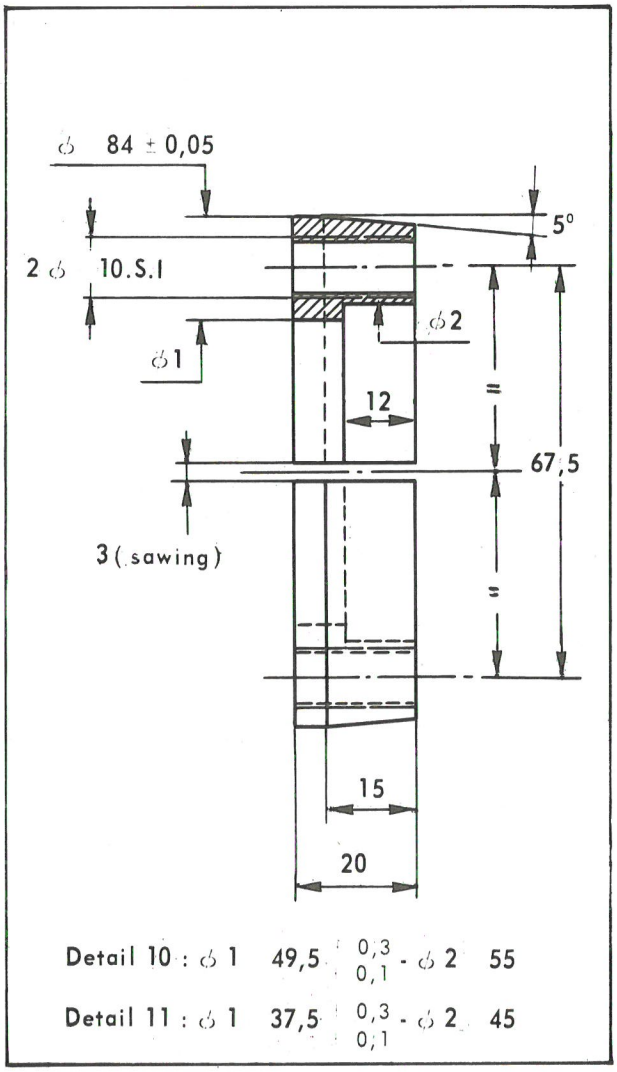
ϕ 84 ± 0,05
5°
2 ϕ 10.S.I
ϕ2
ϕ1
12
67,5
3 (sawing)
15
20
Detail 10 : ϕ 1 49,5 0,3 0,1 - ϕ 2 55
Detail 11 : ϕ 1 37,5 0,3 0,1 - ϕ 2 45

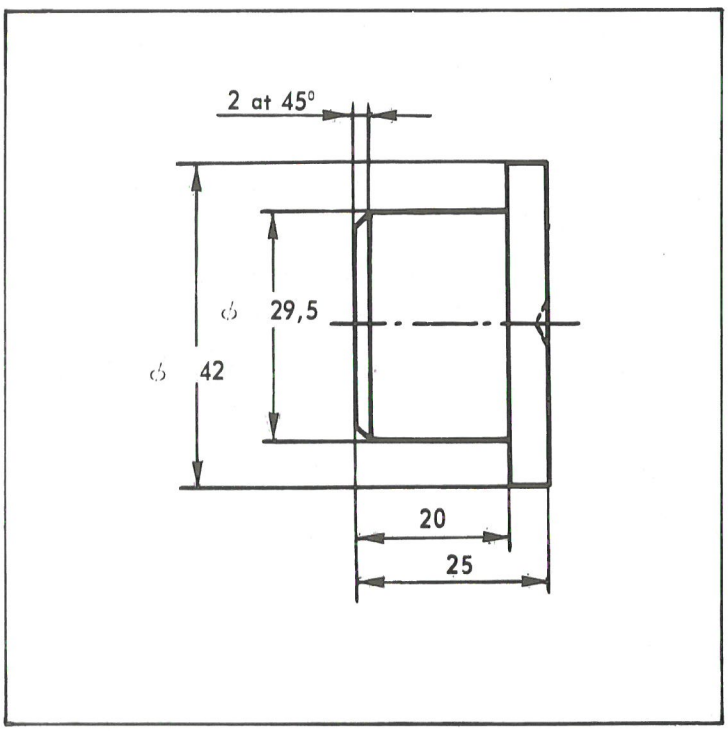
2 at 45°
ϕ 29,5
ϕ 42
20
25

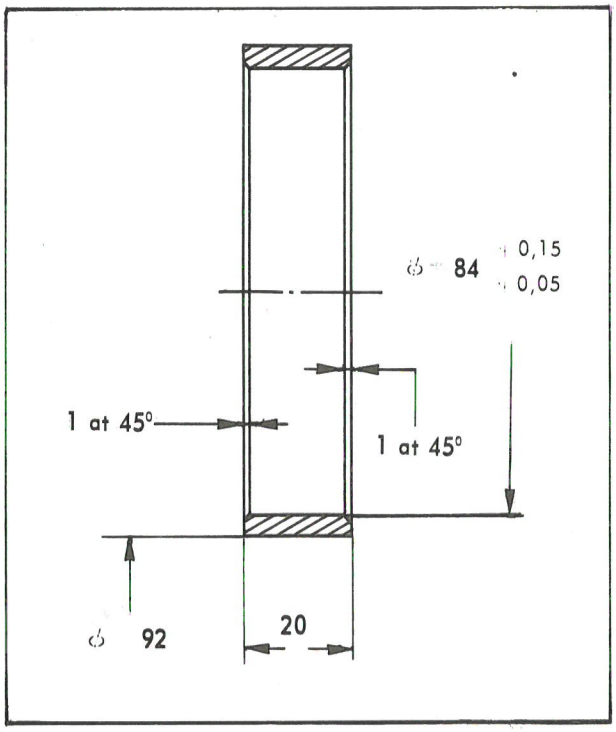
ϕ 84 0,15 0,05
1 at 45°
1 at 45°
ϕ 92
20

MR.630.64/40

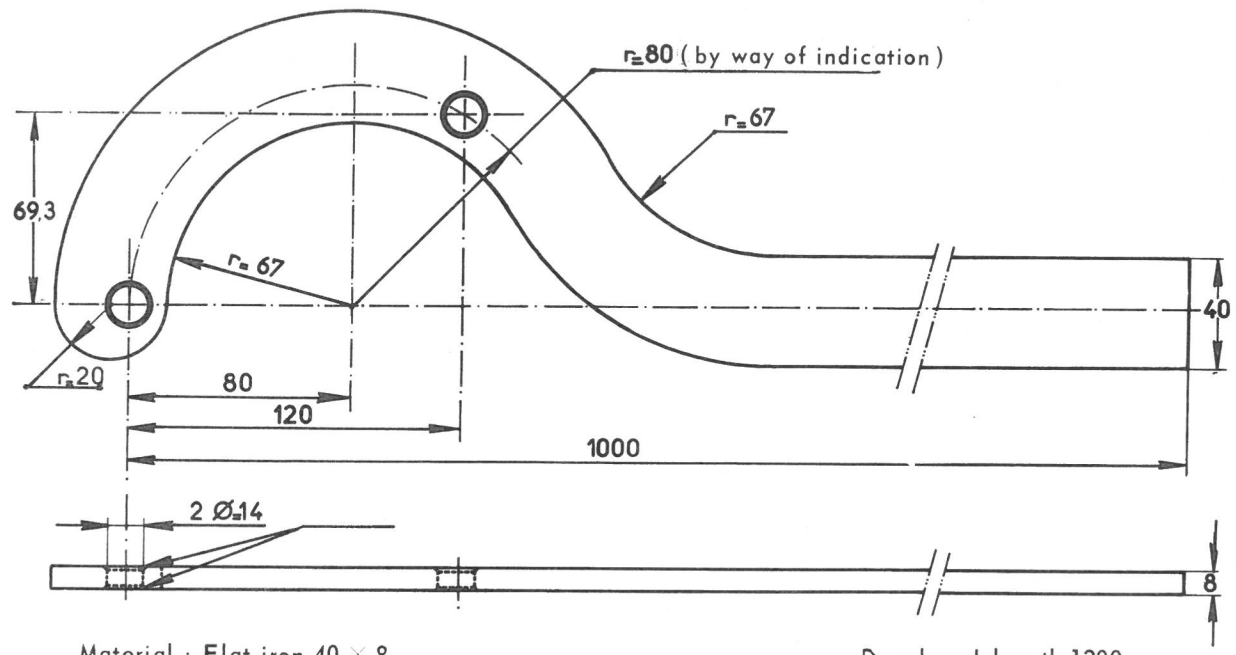

Material : Flat iron 40 × 8

Developed length 1200

MR.630-16/2
ex MR-3691

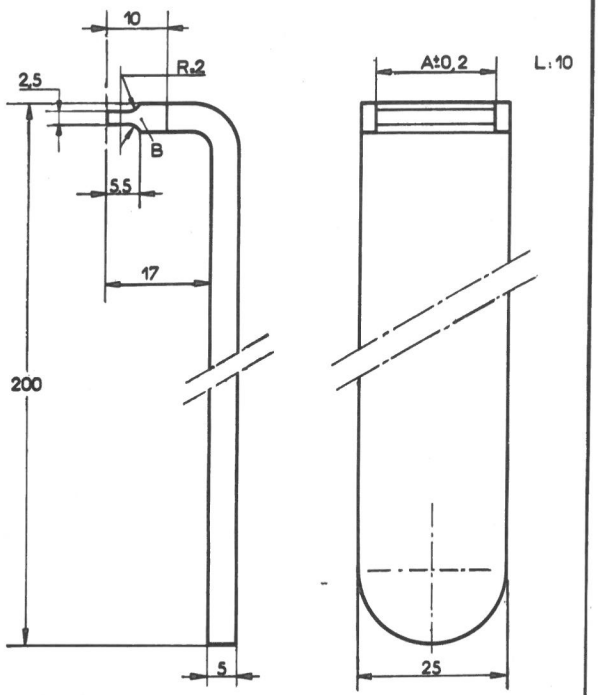

MR 3691-1 - A = 23,6
MR 3691-2 - A = 20,3
MR 3691-3 - A = 21,6

Steel, half-hard
Zone B treated to 90 kg

MR.630-31/39
ex. MR. 3436-40 a

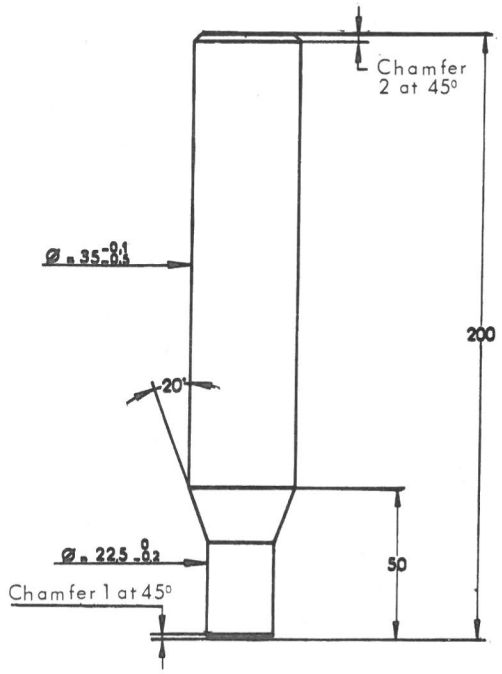

Steel half-hard

MR-630-31/54
ex MR-3616-20 a

A : mandrel for fitting inner bearings

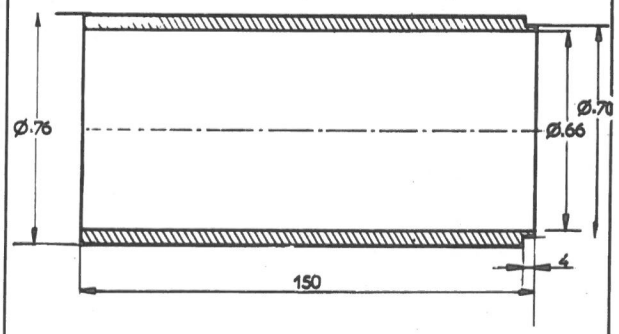

B : mandrel for fitting outer bearings

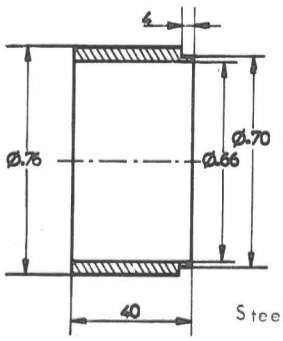

Steel half-hard

MR-630-31/55
ex MR-3676-10

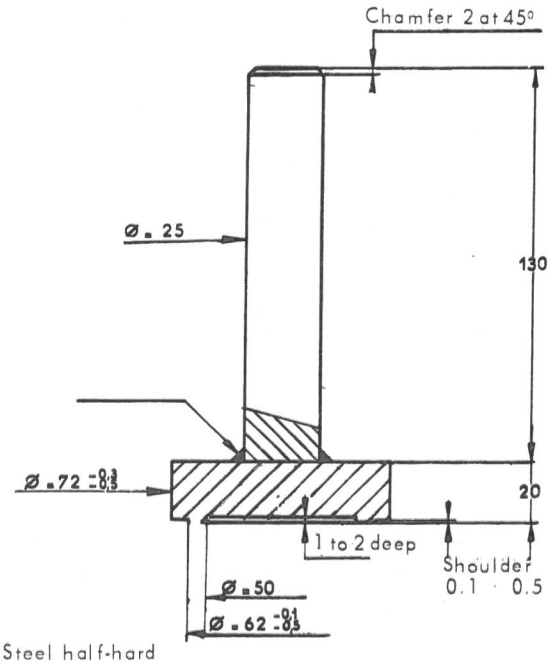

Steel half-hard

MR.630-22/14

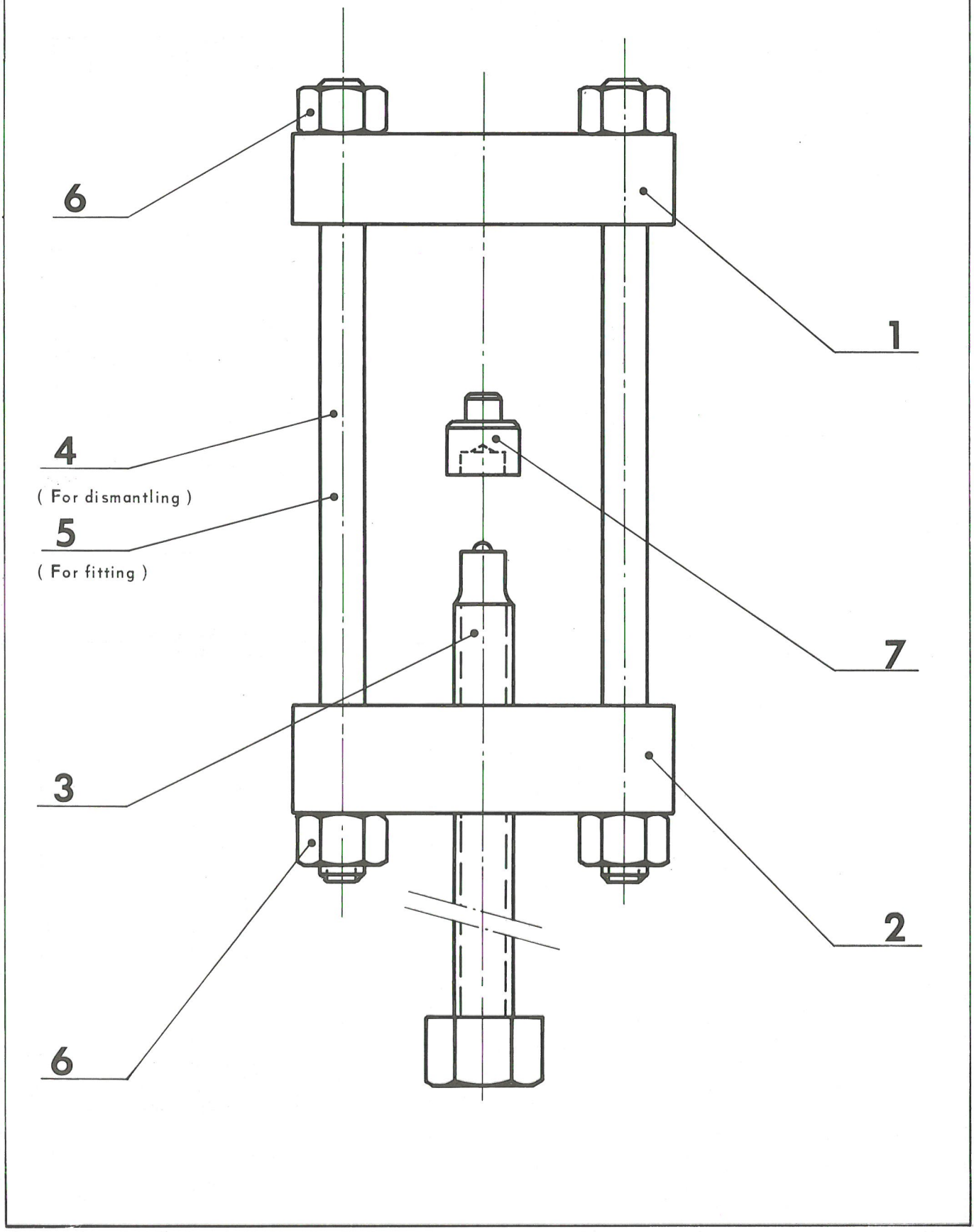

MR.630-22/14
PART 1

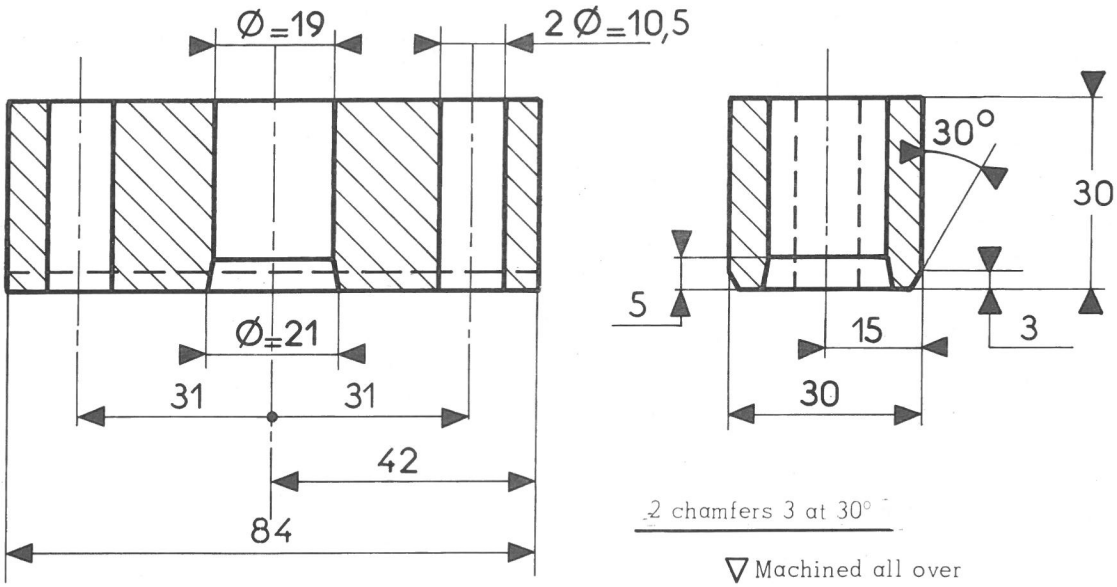

2 chamfers 3 at 30°

▽ Machined all over

MR.630-22/14
PART 2

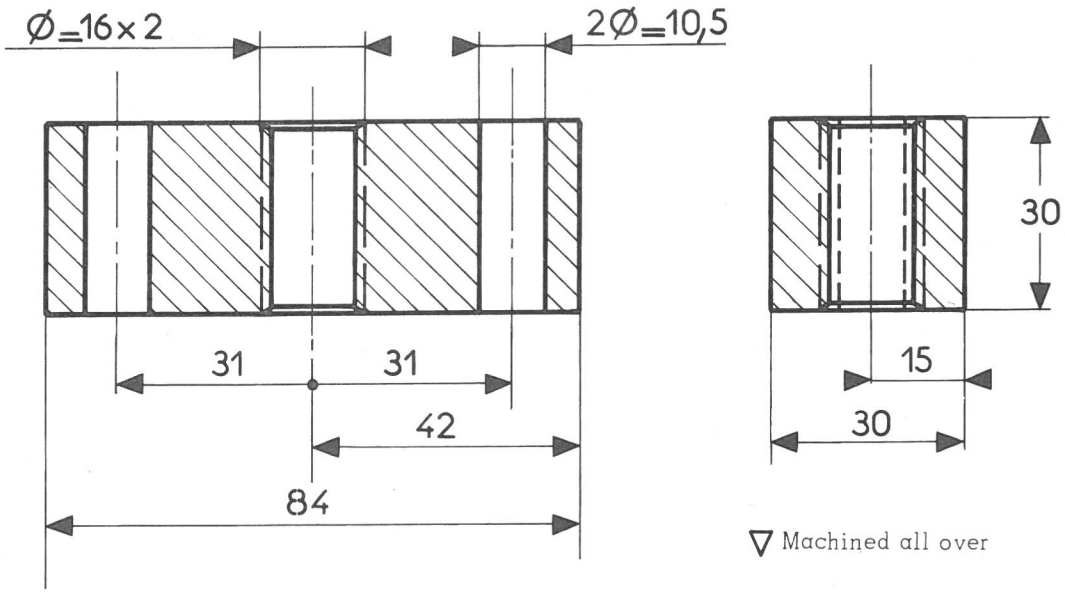

▽ Machined all over

MR.630-22/14
PART 3

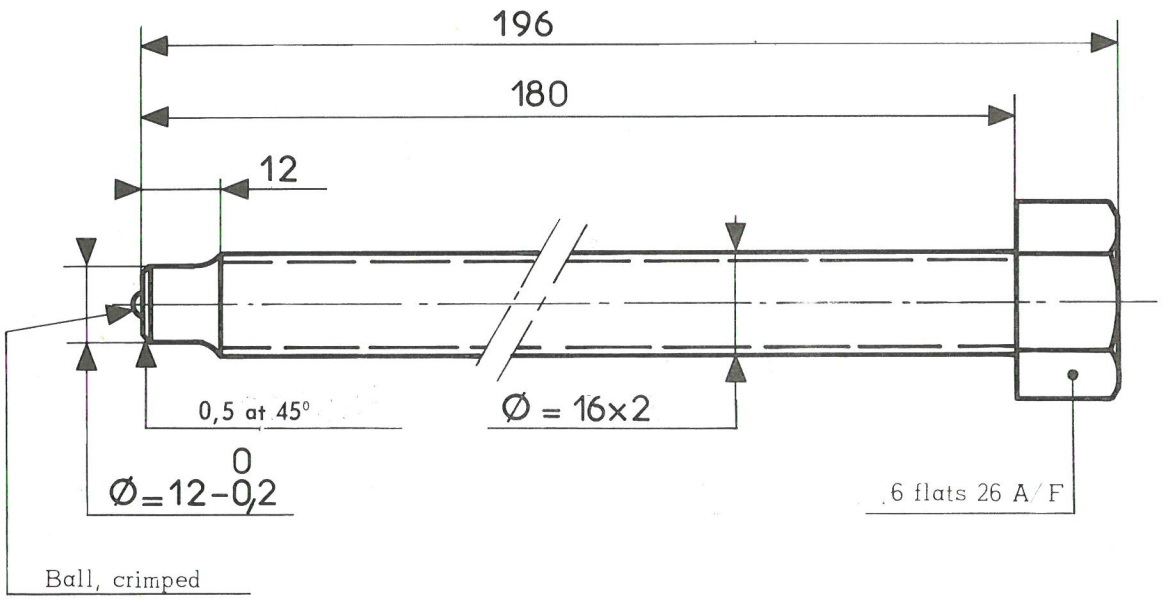

MR.630-22/14
PARTS 4 AND 5

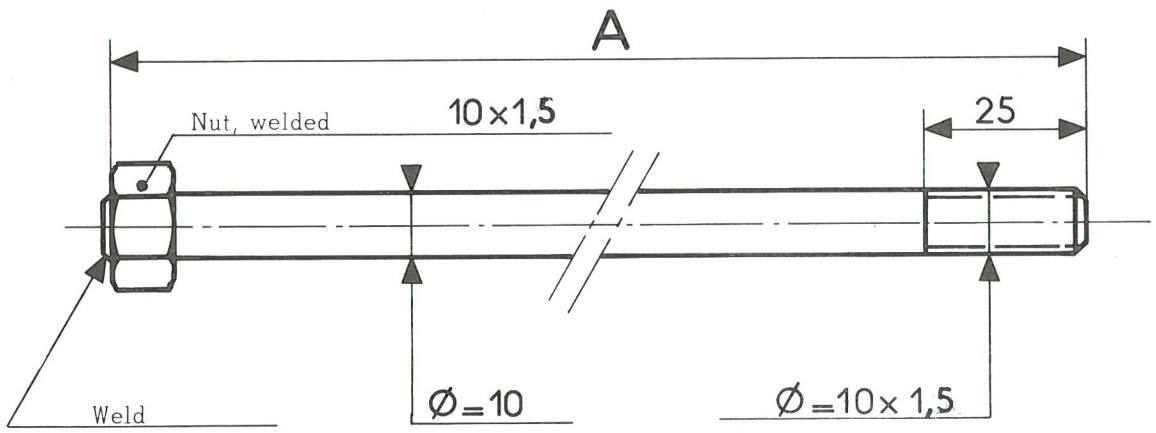

4 2 parts A = 235 for extracting

5 2 parts A = 300 for fitting

MR. 630-22/14
PART 7

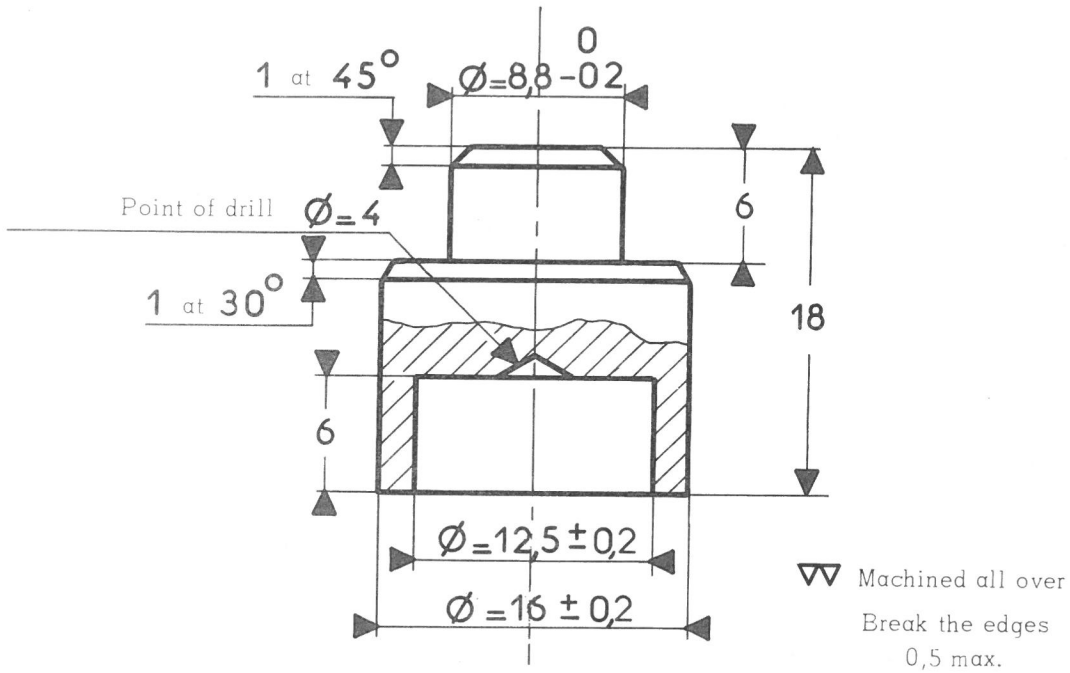

	REFERENCE	Qty.	MATERIAL	DESCRIPTION
	MR. 630 22/14			
	1	1	Half hard steel	UPPER CROSSMEMBER
	2	1	Half hard steel	LOWER CROSSMEMBER
	3	1	Half hard steel	THRUST SCREW
	4	2	Half hard steel	SHORT STUDS, FOR EXTRACTING
	5	2	Half hard steel	LONG STUDS, FOR FITTING
	6	6	Half hard steel	NUTS 10 × 1.5
	7	1	Half hard steel	PAD

MR. 630_27/6

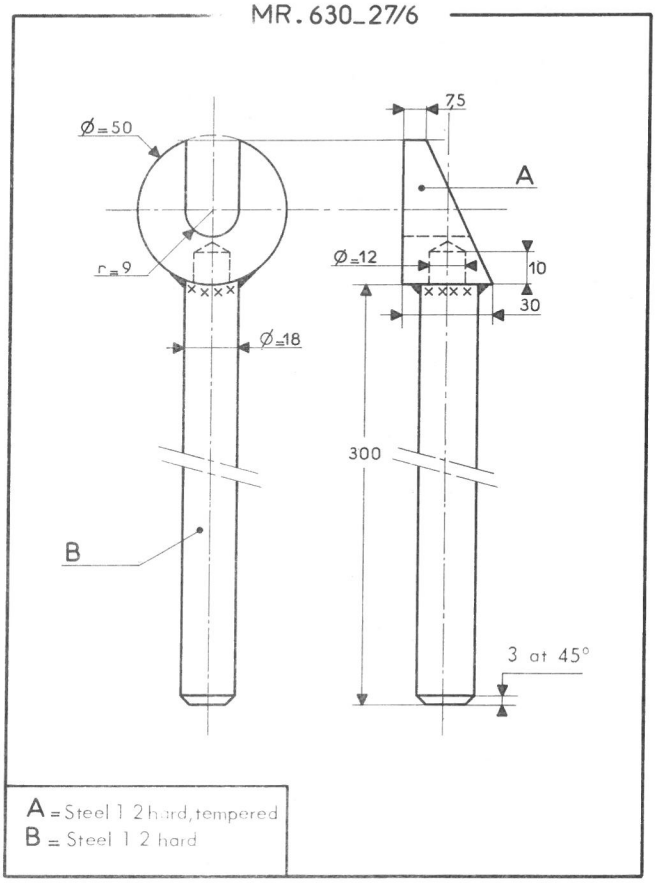
Ø=50
r=9
Ø=18
B
75
A
Ø=12
10
30
300
3 at 45°
A = Steel 1 2 hard, tempered
B = Steel 1 2 hard

MR.630-62/11
ex: MR.3354-2

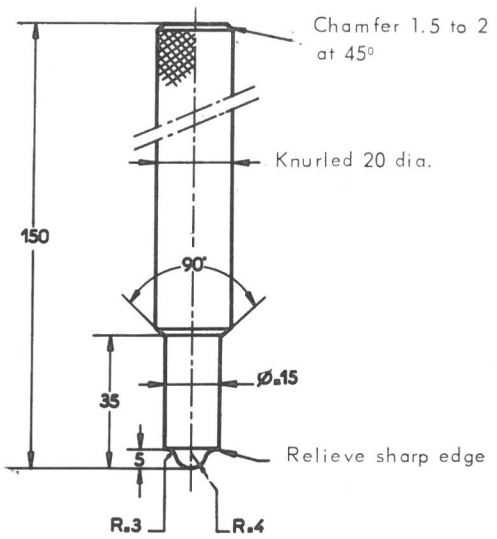

Tempered steel

MP 630-62/13
ex: MR.3354-20

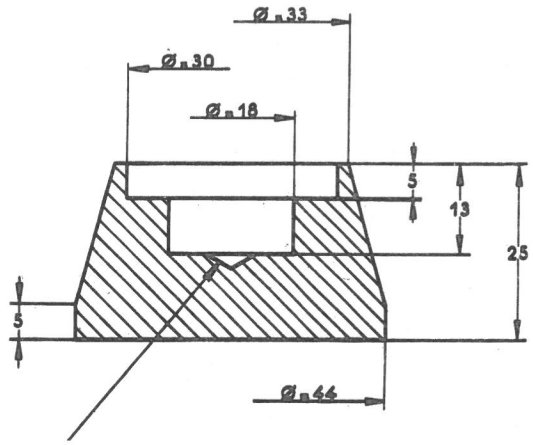

Countersink 2 to 3 mm

Half hard steel tempered and annealed

MR.630.66/17

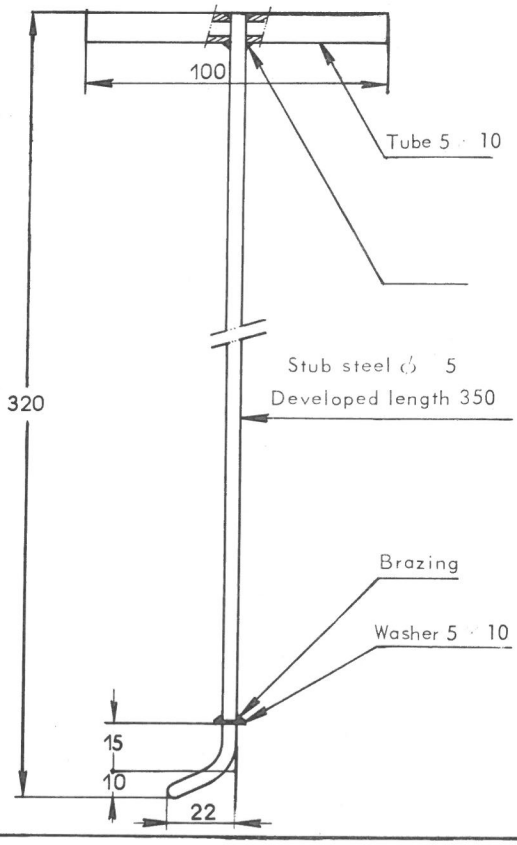

MANUAL N° 816-2

SECOND SECTION

RECONDITIONING

LIST OF OPERATIONS
IN THE SECOND SECTION OF THE MANUAL No. 816-2

« A » Vehicles produced since 1963 (except Ami 6 and Ami 8)

Operation Number	DESCRIPTION
	ENGINE - CARBURETTOR - IGNITION
A. 100-3	Overhauling an engine
A. 112-3	Overhauling a cylinder head
	GEARBOX
A. 330-3	Overhauling a gearbox
A. 334-3	Overhauling a shaft control lever
	FRONT AXLE
A. 410-3	Overhauling a front axle : - Removing and fitting a front axle - Replacement of an arm stop - Checking a front axle arm, removed
	REAR AXLE
A. 422-3	Overhauling a rear axle arm - Removing and fitting a rear axle - Replacement of an arm stop - Checking a rear axle arm, removed - Replacing the wheel studs
	SUSPENSION
A. 434-3	Overhauling a suspension unit
	STEERING
A. 442-3	Overhauling a steering unit
	BRAKES
A. 453-3	Overhauling the hydraulic brake components - Overhauling a master cylinder *(all types except with central re-circulation valve)* - Overhauling master cylinder with central re-circulation valve - Overhauling a rear wheel cylinder (with cups) - Overhauling a front wheel cylinder (with O-ring seals)
A. 453-6	Overhauling the hydraulic brake components
	TOOLS
	List of special tools Manufacturing drawings for tools not sold

OVERHAULING AN ENGINE

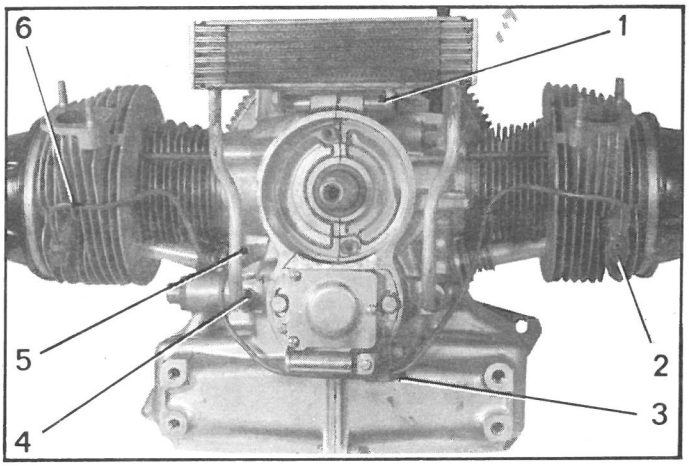

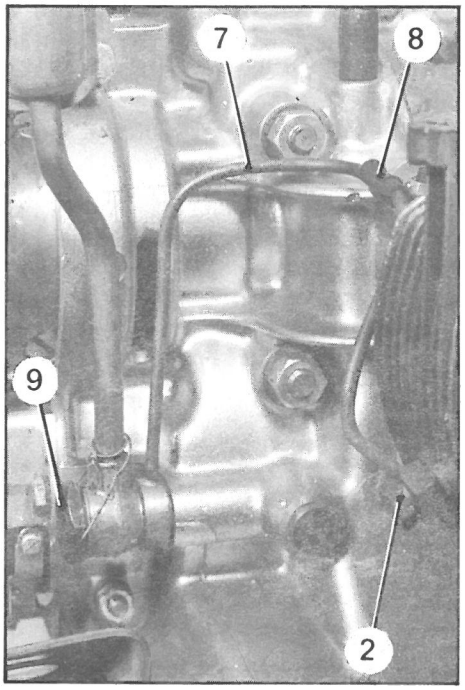

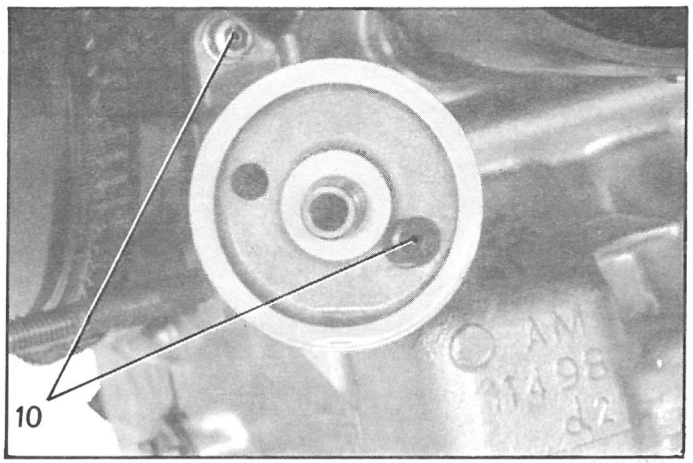

DISMANTLING

1. Strip engine :

(See relevant operation).

Place the engine on support MR. 630-43/4.

Remove :

- alternator *(as applicable)*,
- fan,
- carburettor and its distance piece,
- inlet and exhaust manifold,
- the assembly fan cowl and cylinder cooling panels,
- crankcase breather,
- petrol pump,
- dynamo and its armature *(as applicable)*,
- clutch mechanism and clutch disc, or coupling ring with lined segments (centrifugal clutch).

2. Remove oil cooler :

Remove :

- fixing screw on crankcase,
- the two union screws (4) or the two union screws (9),
- the oil cooler and its two distance pieces (1).

3. Remove, if necessary, the filter cartridge (spanner 1683-T).

Remove :

- the two cartridge bracket fixing screws (10),
- the cartridge bracket equipped with its O-ring seal.

4. Remove tube (6) or lubricating tubes (7) *(as the case may be) :*

Remove :

- union screw (5) on crankcase *(as applicable)*,
- union screws (2) on cylinder heads,
- clip (3) or clips (8) *(as the case may be)*.

5. Remove distributor :

Remove the two fixing screws.

Free the distributor housing with its cover and protection panel.

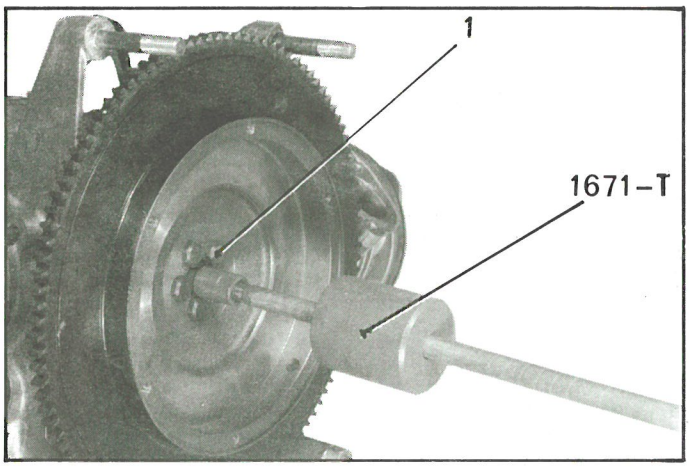

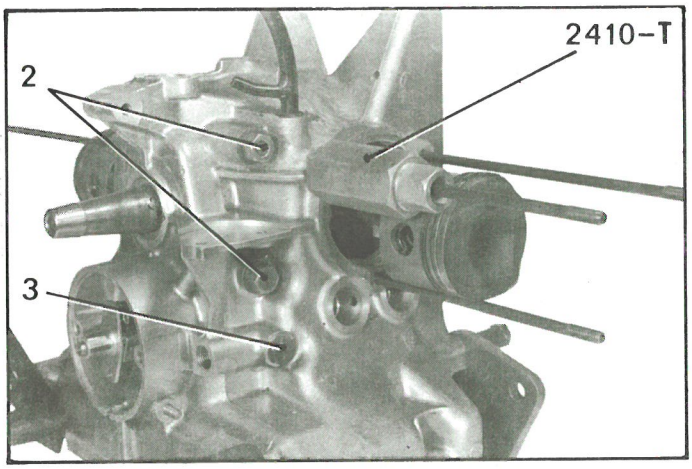

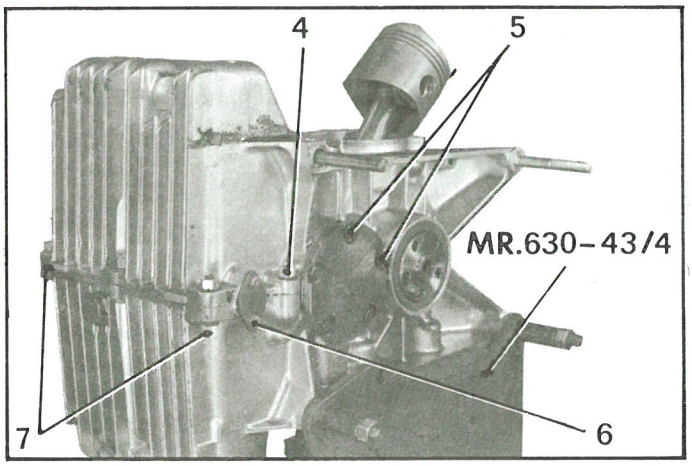

4241

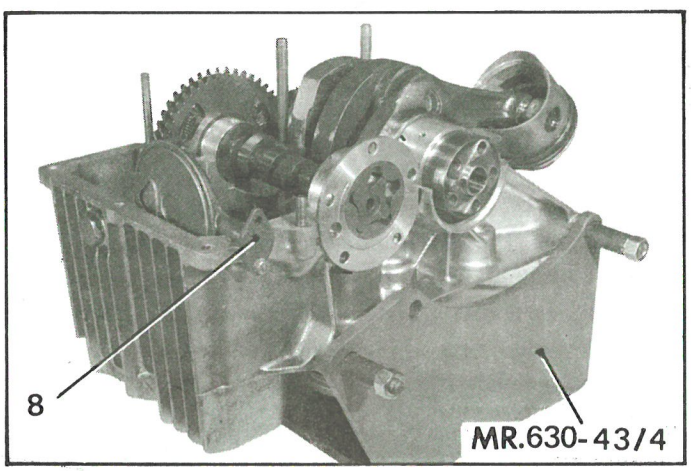

4796

6. Remove engine flywheel :

Remove needle bearing cage (or self-lubricating bush) and its seal bush from crankshaft bore.
Use extractor 1671-T.
Remove fixing screws (1) and engine flywheel.
Screws must be replaced each time engine flywheel is dismantled.

7. Remove cylinder head covers.

8. Remove cylinder heads and cylinders :

Remove the three cylinder head fixing cap nuts.
Remove :
- cylinder heads,
- push-rods,
- cylinders.

IMPORTANT : If cylinders are to be used again they must be marked as such with their respective pistons.

9. Remove cylinder head studs :

Use stud extractor 2410-T. In order not to risk twisting studs locate extractor at their base.

10. Remove the four nuts (2) assembling the crankcase halves.

11. Set engine as shown in illustration with right-hand half housing downwards.

12. Free left-hand half-housing :

Remove :
- screws (4) and free oil pump cover and its O-ring seal *(as the case may be)*,
- oil strainer fixing screws (5),
- screws (6) and nut (3) for half-housing centring screw.

Position pistons at TDC and free left-hand half-housing.

Remove the two tappets.

13. Remove crankshaft :

Free :

- oil strainer (7) or strainer with filter cartridge *(as the case may be)*,
- camshaft with oil pump,
- crankshaft assembly, conrods and pistons and front and rear sealing bushes, (take care not to damage pistons),
- the two tappets from the right-hand half-housing.

14. Remove right-hand half-housing from bracket MR. 630-43/4.

9237

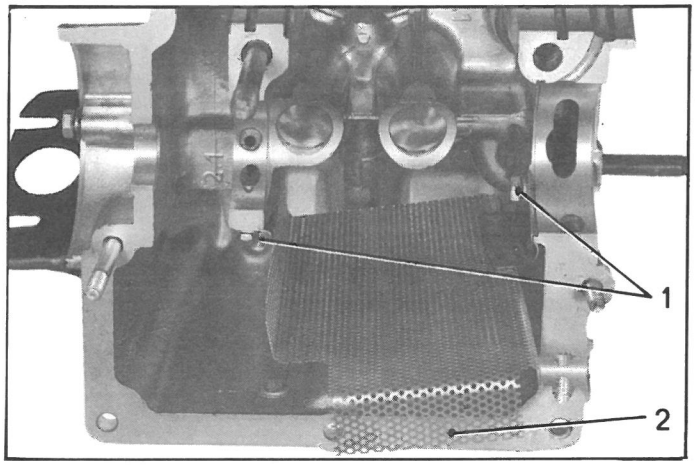

15. Strip the half-housings :

a) Remove :
- oil pressure switch or plug from left-hand half-housing,
- drain plug and plug for the pressure release valve (copper joint) from right-hand half-housing,
- spring adjusting washers (spring calibration) and valve ball or valve spring and piston *(as the case may be).*

b) Remove, if necessary, the two fixing screws (1) from anti emulsion shield (2) and free shield.

4243

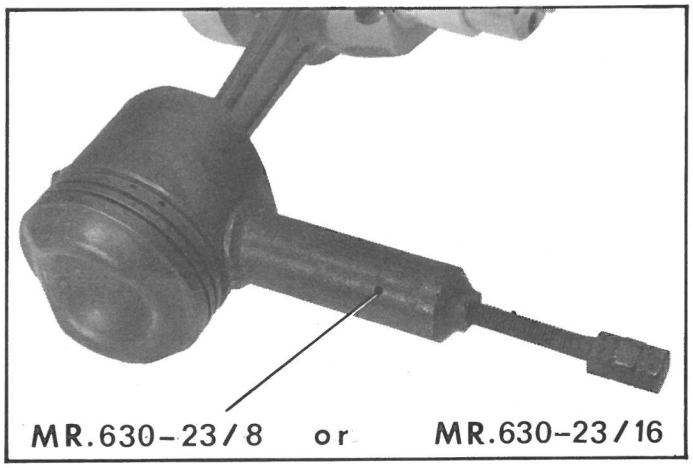

16. Remove pistons from connecting rods :

Remove :
- circlips from gudgeon pins,
- gudgeon pins (pairing each pin with its corresponding piston), by using extractor MR. 630-23/8 (for engines of 425 and 435 cc), MR. 630-23/16 (for 602 cc engine).

NOTES :

a) *Engines produced before October 1966 :*
If pistons are to be used again, heat them to a temperature of 60° centigrade before removing or refitting the gudgeon pins by immersion in an oil bath or heating them in an oven.

b) *Engines produced from October 1966 :*
The gudgeon pin is fitted loose in piston and connecting rod and it is not necessary to heat the piston before removing or re-fitting the pin.

4248

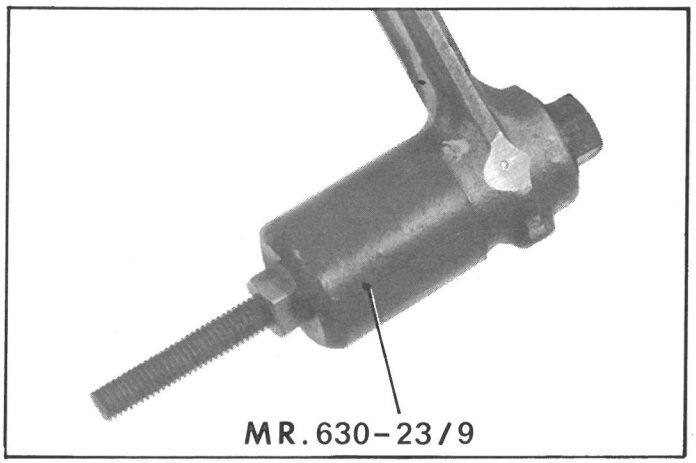

17. Remove connecting rod small end bushes (if necessary) :

NOTE : This delicate operation is not advised and can only be carried out in a specially equipped workshop.

Use extractor MR. 630-23/9.

4789

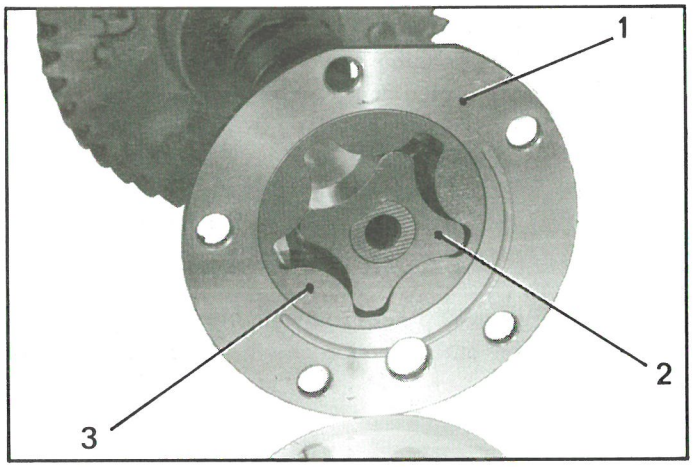

PL.226

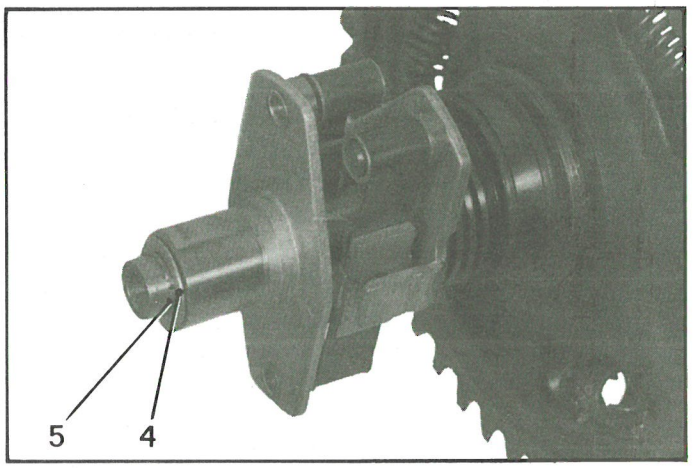

9248

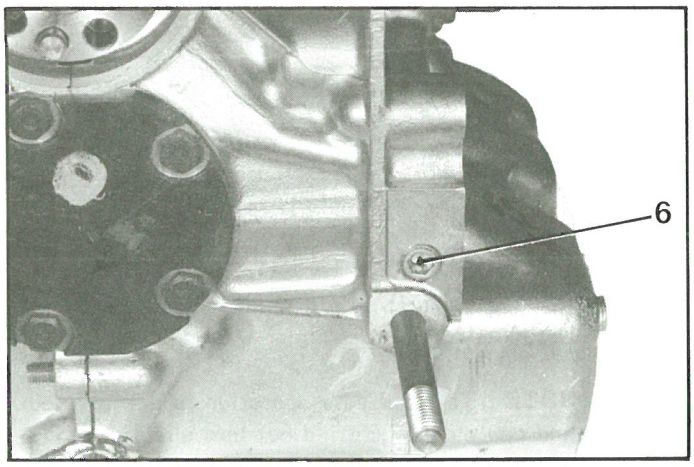

18. Strip the cylinder heads :
(See relevant operation)

Remove :
- push rod sleeve joints,
- rocker arms and rocker arm spindles,
- valve springs,
- valves

19. Strip camshaft :

a) Free, at rear :
- oil pump body (1),
- pump pinion (2),
- gear wheel (internal teeth) (3)

b) Remove, at front :
- circlip (5),
- thrust washer (4),

Free automatic advance weights and cam assembly without straining springs

20. Clean all parts :

IMPORTANT NOTES :

I To ensure effective sealing of front and rear bearings, the crankshaft has a machined micro-turbine (oil thrower) located on the sealing faces for the oil seal Any abrasive action on this micro turbine will destroy its effectiveness and result in an oil leak

II To clean oil cooler effectively, soak it in a bath of cellulose thinner for approximately one hour Drain it off and dry it with compressed air However, if a big end bearing has « run », replace cooler and oil filter screen

III *Vehicles produced since November 1970.*

Remove lubrication piping plug (6)

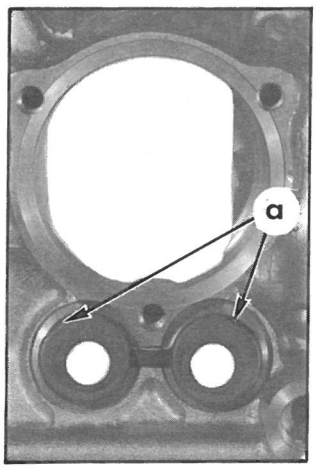

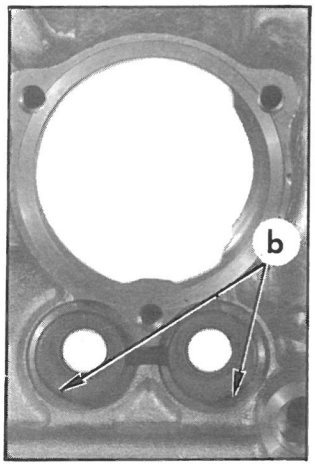

4250

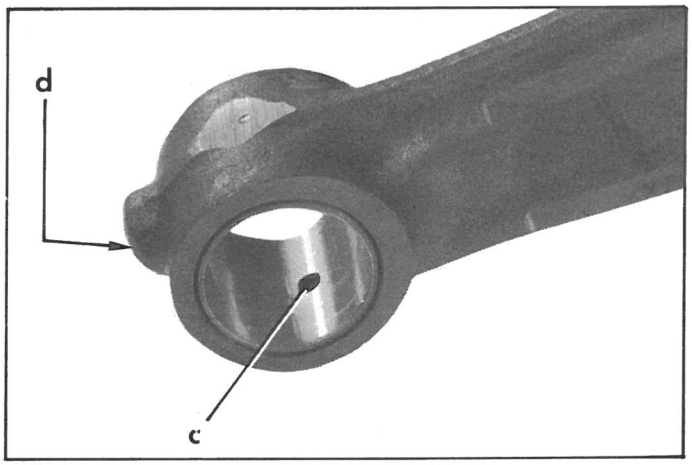

4248

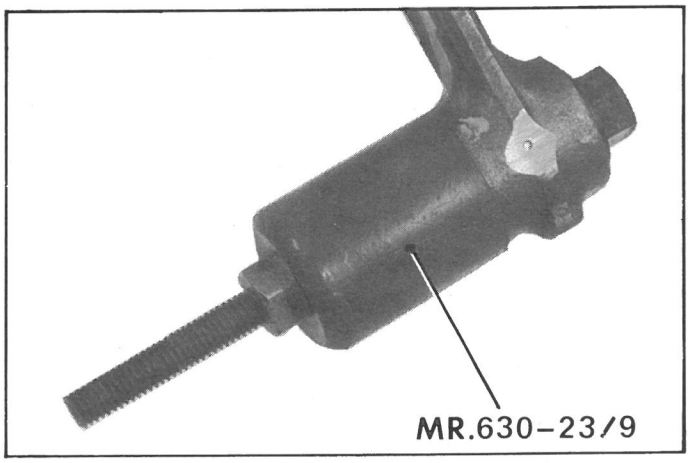

PREPARATION

21. Prepare cylinder heads :
(See relevant operation).

a) Grind valves and their seats, if necessary
b) Lap the valves.
c) Fit valves and their springs.
d) Fit rocker arms and rocker arm spindles.
e) Fit joints on push-rod sleeves.

IMPORTANT :
Since December 1972. push-rod sleeve joints have no centring tab in crankcase and are positioned differently according to engine type (see illustrations). *This type of joint cannot be fitted to engines produced before this date.*

On engines M 28 *and* M 28/1 (602 cc). position flats « a » upwards.

On engines A 79/1 (435 cc). position flats « a » downwards.

22. Prepare connecting rod small ends :

If they have been removed, fit small end bushes.

NOTE : *This delicate operation can only be carried out in a specialized workshop.*

Bushes sold by the Replacement Parts Department have been bored to within approximately 0.05 mm under size of diameter of bore required.

Plug holes « c » in bush with grease, or tallow.
Fit bush thus prepared so that centreline of lubrication holes « c » of the bush is perpendicular to centreline of connecting rod (Use extractor MR. 630 23/9).
Ream the bush.
If a go-no-go gauge is not available, use the new gudgeon pin to check bore.
This delicate operation must be carried out with the greatest care as the bore measurement must be :

$$20.005 \begin{matrix} +0.011 \\ +0.006 \end{matrix} \text{ mm}$$

Blow compressed air through hole « d » to remove any grease and swarf.
Clean bore of bush.

23. **Engines fitted with conventional scraper-collector rings :**

a) **Fit pistons on connecting rods :**

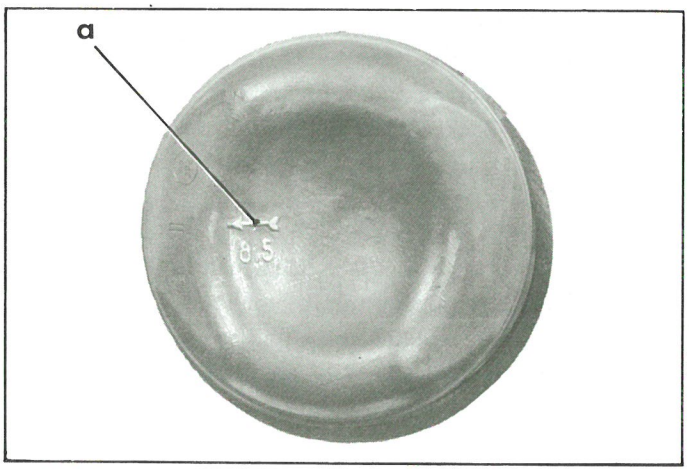

IMPORTANT : Cylinders are supplied with pistons, gudgeon pins and piston rings paired *They must never be mixed.*

Oil gudgeon pins
Fit one circlip in the gudgeon pin bore of each piston
Offer up pistons on small ends of connecting rod : *an arrow « a » indicates direction of assembly (towards front of engine).*
Fit piston pins (previously oiled)
Fit the second circlip on each piston

b) **Fit rings :**

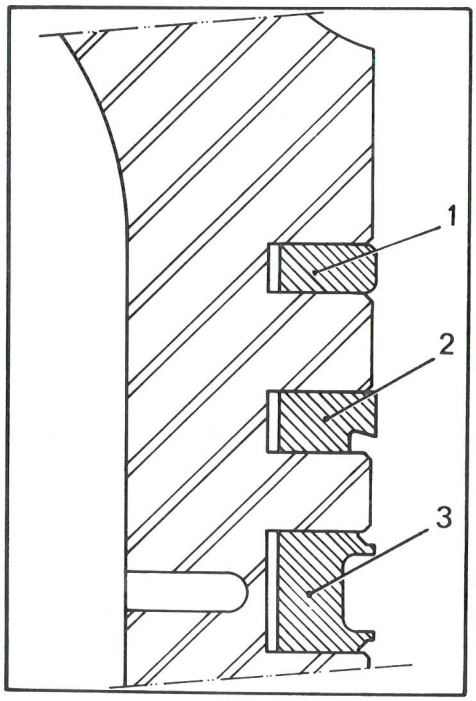

Fit in order :
compression ring (1),
scraper ring (2),
scraper collector ring (3)

CARE : The three rings are marked near gap « H », « TOP », or « HAUT » or supplier s name (e g « NOVA ») *Rings must be positioned with this mark facing upwards.*

Arrange piston ring gaps at 120°

NOTE :

Badly positioned rings will result in an excessive oil comsumption
The clearance at the piston ring gap is checked when pairing them
If a used piston being fitted and new piston rings are used ensure that they turn freely in their groove : if not, re-touch the latter with a piece of used ring, the gap of which will have been ground
If on the contrary there is excessive clearance, the old piston must be discarded

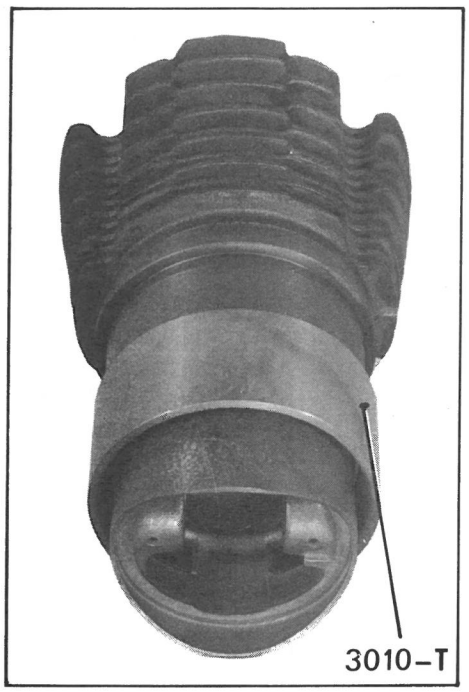

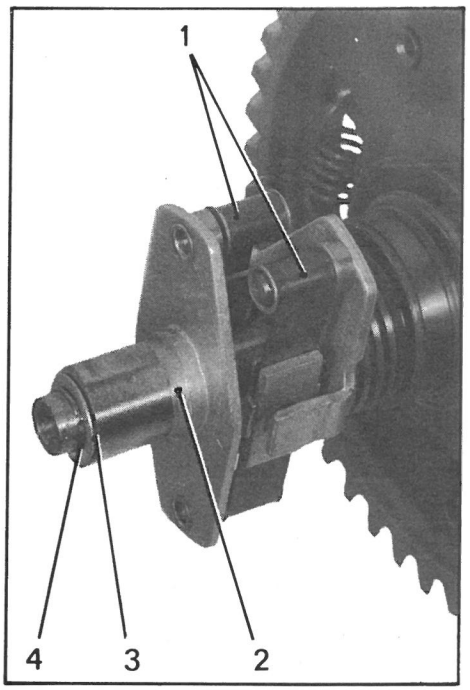

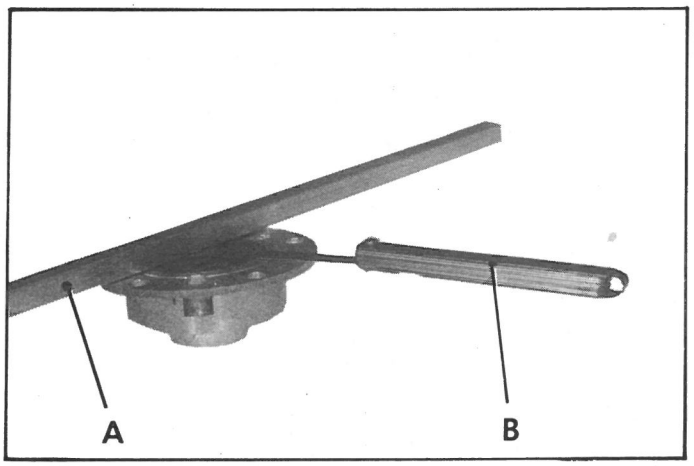

24. Engines fitted with U-FLEX scraper-collector rings :

NOTE :
Since June 1972, a number of 602 cc (3 CV) engines have been fitted with U-FLEX scraper-collector rings. When decompressed, the diameter of the U-FLEX ring is greater than the piston diameter.

Fit pistons in cylinders :
Fit a circlip in the gudgeon pin bore of the piston (arrow side).
Fit rings to piston (*take same precautions as at paragraph 23 b*).
Oil piston-cylinder assembly.
Fit piston into lower part of cylinder.
Use piston ring fitting fixture 3010-T.

25. Prepare camshaft :

a) Check camshaft between centres. Ensure that the end of camshaft (distributor side) runs perfectly true. If not, camshaft must be changed because points gap will not be equal on both cams.

b) Position :

- automatic advance weights (1),
- cam (2),
- thrust washer (3),
- circlip (4).

26. Prepare oil pump :

a) Check end float of oil pump pinions, using straight edge A and a set of feelers B.
End float should not exceed *0.10 mm*

b) Check that pump body thrust faces have neither dents, not scratches (crankcase side and cover side).

c) Position (*according to engine type*) paper gasket on thrust face (engine crankcase side).
Stick in position with a few spots of grease.

IMPORTANT : The paper gasket should be fitted « dry ».

27. Offer up oil pump body (1) on camshaft

Fit pinion (2) with inner teeth and pinion with outer teeth (3), previously oiled

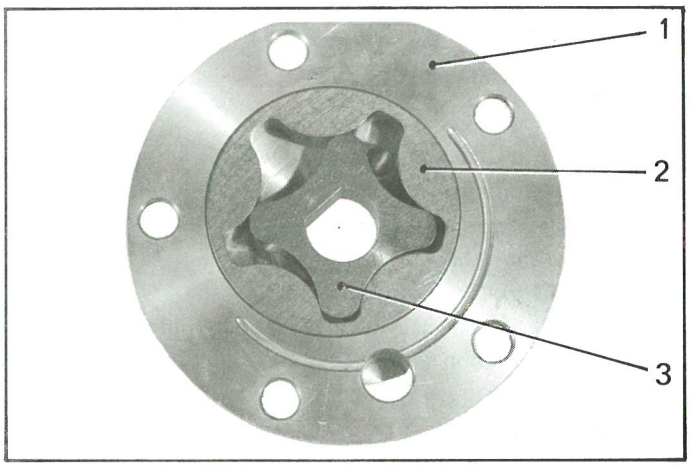

28. Replace starter gear ring :

Drive off starter gear ring with a hammer punch
Clean mating face of ring

Using a blow torch, heat new ring to approximately 200 250° C (pale straw color) turning constantly to ensure even expansion

Offer up starter gear ring, the face not machined towards flywheel shoulder (machined and treated face should always be fitted towards the starter)

Carry out this operation quickly : use a hammer and punch to complete location of ring if neces sary

Check the run out on the starter gear ring (0 3 mm max)

29. Grind the flywheel :

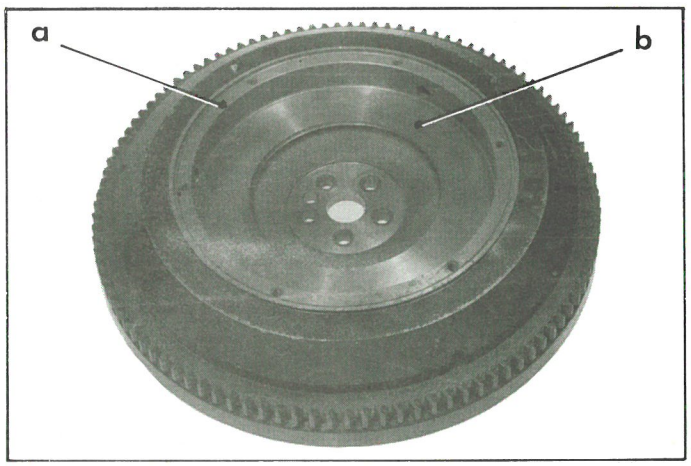

This operation should for preference be carried out on a lathe using a grinding wheel

It can be done with a hand tool, provided that a perfectly polished surface can be obtained

NOTE : After each grinding of disc thrust face « b », on flywheel, an equivalent amount should be removed on clutch mechanism thrust face « a »

Both operations should be carried out without removing flywheel from lathe, so that the two machined surfaces are truly parallel

Use mandrel MR 630 35/9 (425 cc and 435 cc engines) or mandrel MR 630 35/19 (602 cc engines)

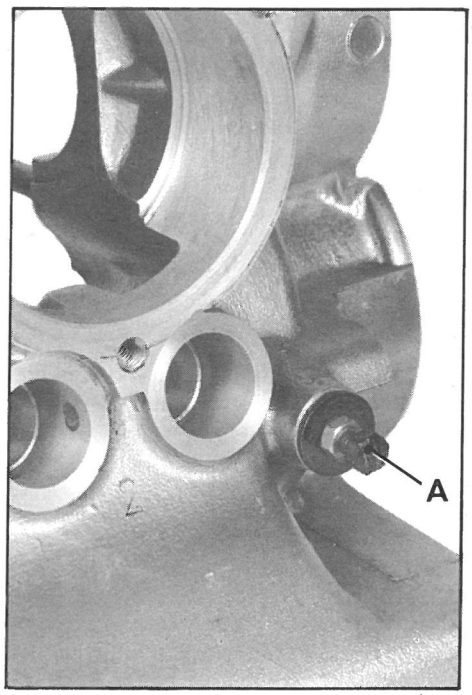

30. Prepare distributor :
(See relevant operation).

Check condition of the contact breaker points. Replace them if necessary.

31. Prepare half-housings :

a) *Engines fitted with « ball type » pressure release valve :*

Replace if necessary, pressure release valve seating :

1°) Extract seating :
Tap thread dia. 6 mm, pitch 1.00 into bore of seat.
(turn a few threads with tap N° 2)

Extract seat, using screw A dia. 6 mm, length 50 mm, fitted with 6 × 20 washer and a nut.

2°) Position new seat, using mandrel MR. 630-31/90.
Crimp seat, using crimping tool MR. 630-31/91.

b) Check condition of all the tapped holes in the half-housings. If a thread is damaged the half-housings can be used again by fitting a « HELICOIL » thread insert into some of these tapped holes. *(See relevant operation).* This process enables original fixing screws and studs to be used again. Fitting « thread inserts » is permitted in the following cases :

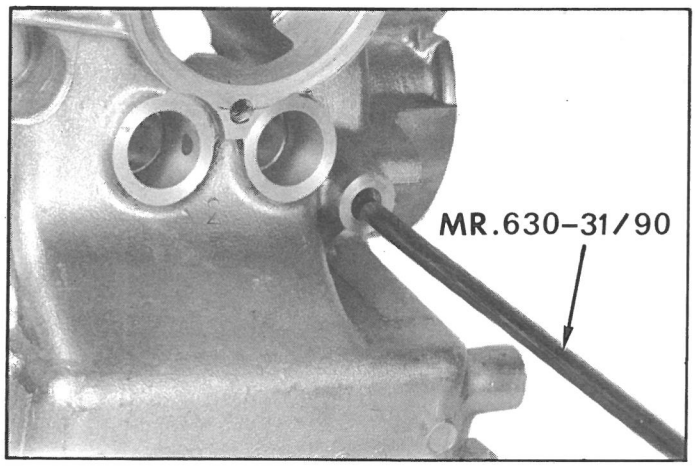

Fixing the petrol pump, breather, distributor, side plugs for draining and oil pressure gauge; front engine mountings, oil pump and oil pump strainer assembling studs for the half-housings and the connecting studs for the engine-gearbox assembly.

NOTE : If connecting studs for engine-gearbox assembly must be dismantled, note their positions as they are of varying length.

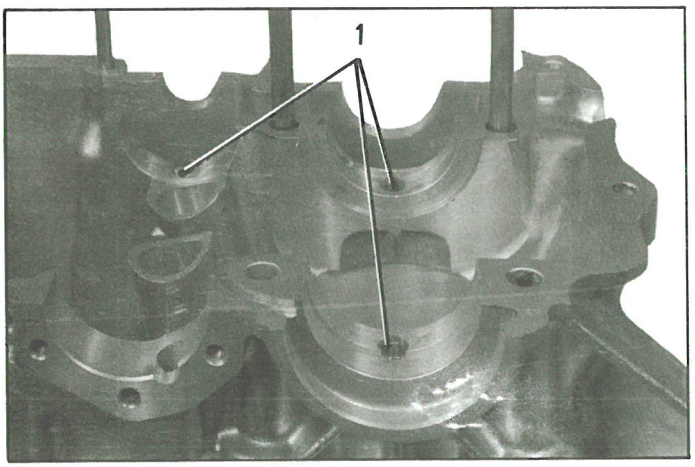

c) Fit the engine gearbox connecting studs, if necessary One end of each stud has a thread 15 mm in length which is screwed into crank case

d) If the core plugs (2) show traces of oil see page, clean them with trichlorethylene Spread METALIT or a similar type of product around the core plugs, after cleaning them again with a thinner supplied with the product *Never attempt to make these plugs oil-tight by dismantling them.*

32. Ensure that the centring dowels (1) are correctly in place

NOTE :

The front centring dowel of the camshaft bearing for engines fitted with exterior filter cartridges also serves as a seating for the by pass valve ball in the lubricating system

Place the right hand half crankcase on stand MR 630 43/4

The joint surfaces of the crankcase halves should be thoroughly cleaned and free from bruise marks

Lubricate the crankshaft journal (with an oiler)

Fit the rear bearing on the crankshaft journal

Fit the crankshaft in place, noting position of the groove « a » on the rings, which should be le vel with joint « b »

Ensure that the centring are properly fitted on the holes of front and rear bearings

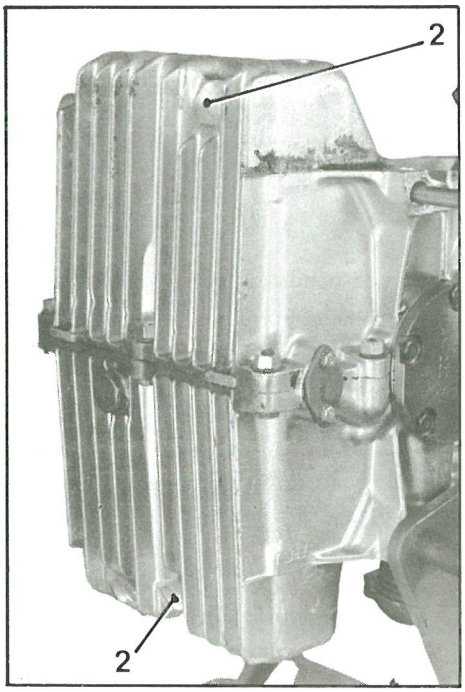

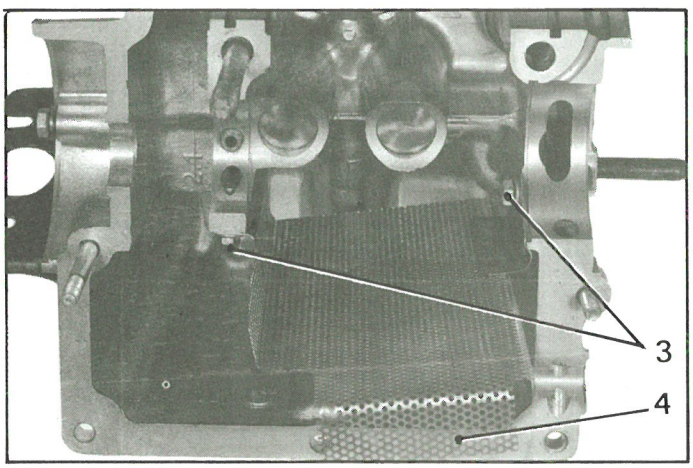

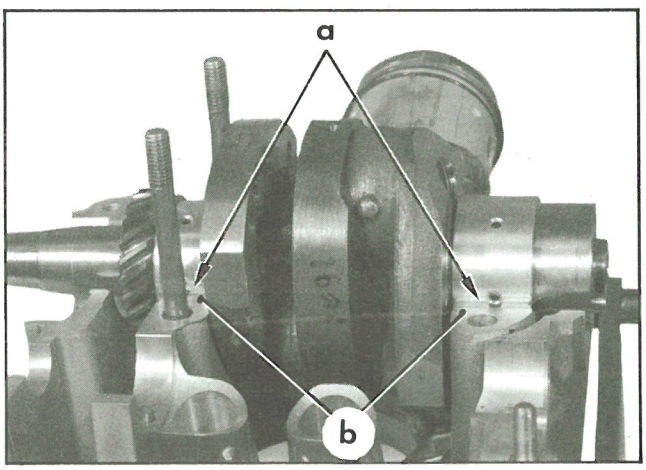

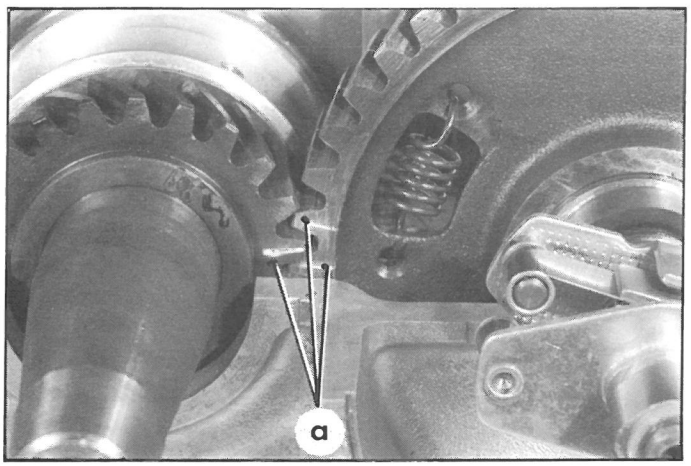

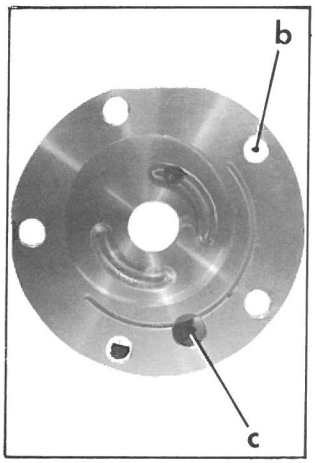

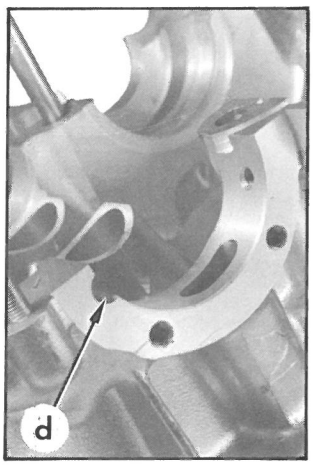

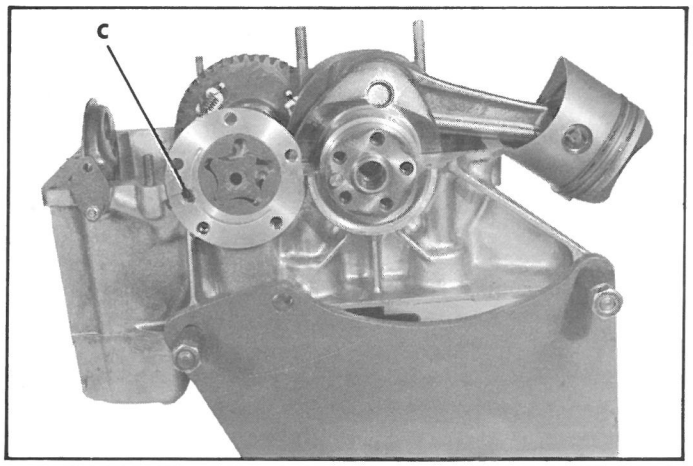

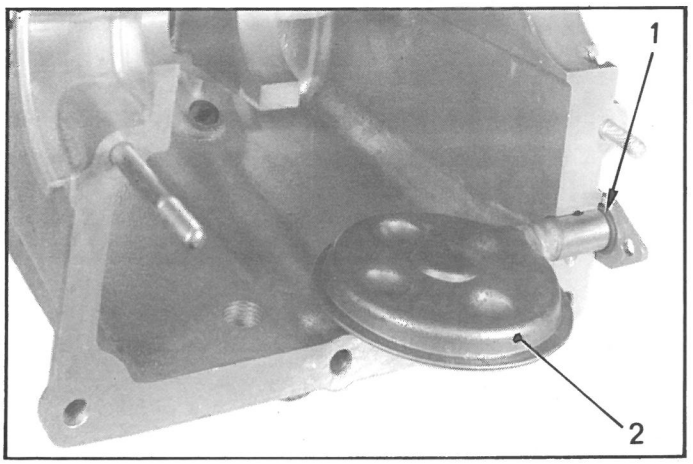

33. Fitting the camshaft :

Oil camshaft bearings (use an oiler)

a) Fit the assembly of camshaft and oil pump in right hand half crankcase so that markings « a » on pinions should be in accordance with each other

Ensure that the front bearing is properly set on centring dowel

b) Locate the oil pump body

NOTES :

I *If the oil pump body is equipped with a paper gasket.* check that the gasket is properly fitted between pump body and engine crankcase This gasket should be fitted dry

II *If there is no paper gasket fitted to pump body.* coat thrust face of oil pump body on crankcase with Masti-joint HD 37

Make holes « b » in pump body, face holes threaded in half crankcase, and align oil in take hole « c » in pump body, with correspon ding hole « d » on engine crankcase

34. Fit the oil filter screen (model without cartridge type filter) :

a) *If the oil filter screen is not fitted with O-ring seal.* apply Masti joint HD 37 to securing clamp

b) *If the oil filter screen is equipped with O-ring seal.(1),* the oil tightness of the clamp is achieved by the seal which must be renewed each time it is dismantled

NOTE : It is not possible to fit an O ring seal on crankcases not reamed for the seating of the seal

c) Position oil filter screen (2) with oil entry hole positioned towards the base of crankcase ((do not use Masti joint)

d) Screw on the securing screw (spring washer)

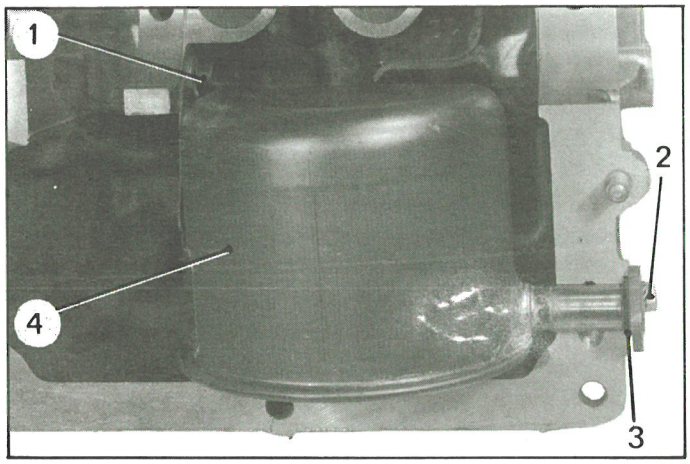

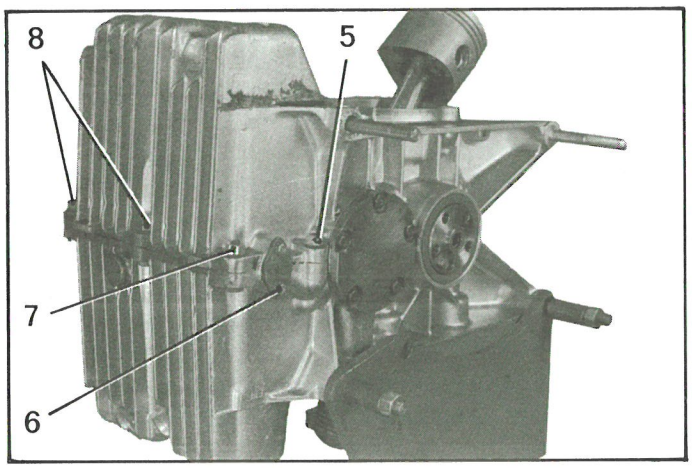

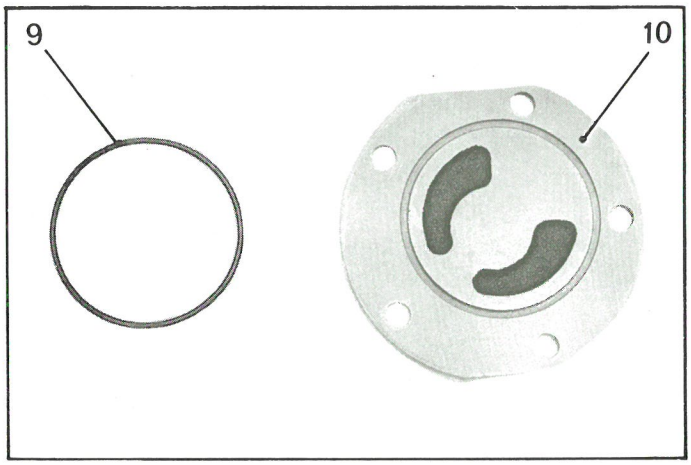

34. **Fit oil filter screen** (with filter cartridge incorporated) :
NOTE : This filter must be replaced whenever the engine is dismantled)
a) Position O ring seal (3), passing it through screen clamp
(replace gasket whenever it is dismantled)

b) Offer screen in half crankcase and fit the securing screw (2) for clamp (spring washer)

c) Smear threads of securing lug of screen (1) with LOCTITE GX 01 45901 A

Screw on the screw (1) (flat washer)

Ensure that the clamp tubular bracket is set in bore of half crankcase and that there is a small float between the bottom of the screen and the central rib at the bottom of the crank case

If not, slightly turn the screen within the limits allowed by the play between holes and securing screws

d) Tighten the screw securing the lug (1) to 10 m\\ (1 m kg)

35. **Fit left-hand half crankcase :**

Smear the contact faces of both crankcase halves with Masti joint HD 37
NOTE : Coat only half the width of the joint face (outwards) : Masti joint must not run between bearings and crankcase

Place left hand half against right hand segment
Screw on the securing nuts for the bearing studs (flat washers)

Position second securing screw (6) for bearing studs without tightening them (spring washer)

NOTE : Position the two crankcase halves by aligning the machined sections (thrust face for oil pump, crankshaft bearings), the projection of one crankcase half in relation to the other one must not exceed 0 05 mm

Position the five screws (8) and (7) for assembling the crankcase halves (with flat washers under nuts)
Tighten to 19 m\\ (1 9 m kg)

NOTE : Screw (7) has a straight portion which ensures the correct centring of the crankcase halves
Tighten nut (5) to 19 m\\ (1 9 m kg) (flat washer)
Tighten the two oil screen screws to 5 m\\ (0 5 m kg) (spring washer)

36. **Fit oil pump cover :**
Before fitting, run a line of Masti joint HD 35 around the circumference of the inner face of the pump cover
(*Cover without O-ring seal*).
This should be a thin line so that the Masti joint is not squeezed into interior of pump when cover is tightened down
Fit cover Tighten screws to 13 - 15 m\\ (1 3 to 1 5 m kg)
NOTE : *Fit as applicable.* O ring seal (9) on oil pump cover (10) (Renew seal whenever unit is dismantled)

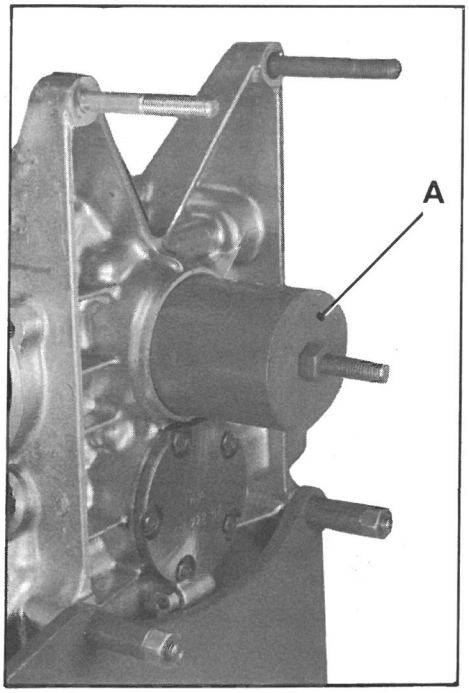

37. Free engine from stand MR 630-43/4 and set up as illustrated.

Tighten the bearing stud securing nuts (2) (flat washers) to 45 mAN (4.5 m kg)

38. Fit seal rings :

a) Fit rear seal ring :
Grease with high-melting point grease, interior and exterior of seal.

Position seal with face bearing name and reference of manufacturer towards exterior of engine.

To position seal, use tool A :
MR 630-34/25 (for engines A 53 - A 79/0 and A 79/1),
3004 T (engine M 4),
3007 T a (engines M 28 and M 28/1)
(Oil interior cone of tool with engine oil).
The ring flange should come into contact with the crankcase.

b) Fit front seal ring :
Grease with high melting point grease, interior and exterior of seal.
Position seal with face bearing reference and manufacturer's name towards exterior of engine.

Locate ring seal (1) using a tube of exterior diameter 45 mm, interior diameter 31 mm, and length 100 mm.

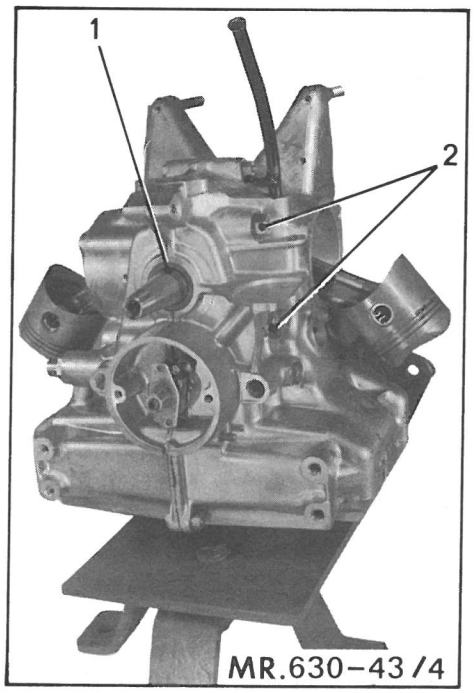

The ring recess in relation to the face of crankcase should not exceed 1 mm.

NOTE : Fit only ring seals sold by our Replacement Parts Department

IMPORTANT : Renew ring seals whenever these are dismantled. Never fit ring seals before assembling crankcase halves, this in order not to pinch them, which would cause oil leaks.

Take care to ensure that ground lip of ring has not been damaged during fitting, as this would result in an oil leak.

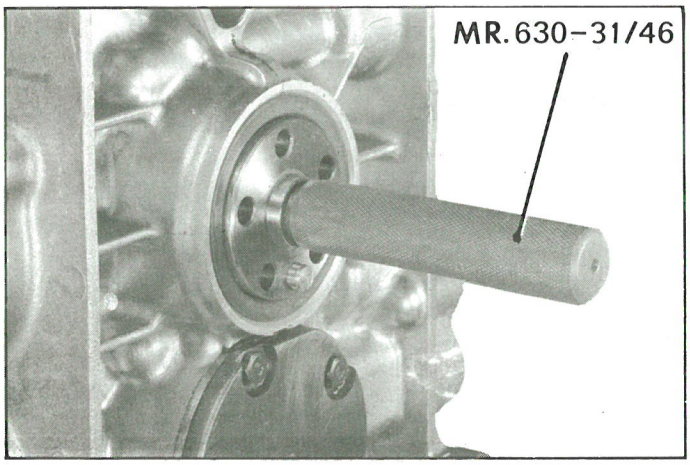

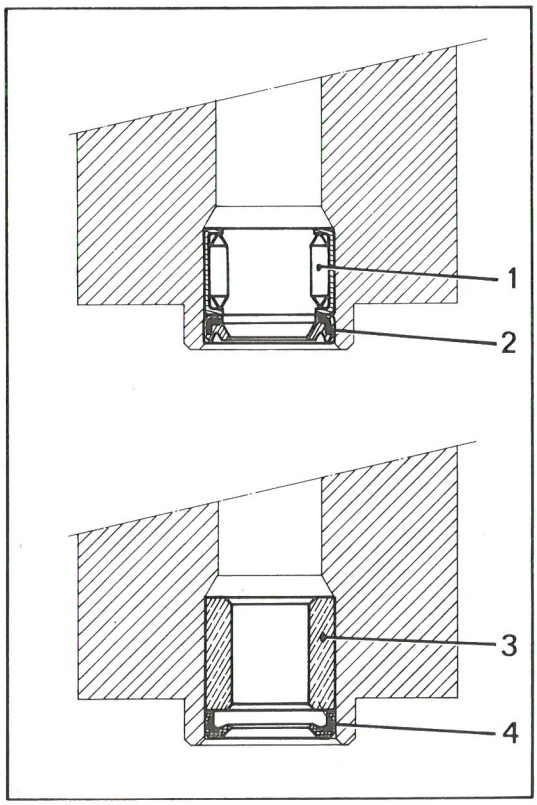

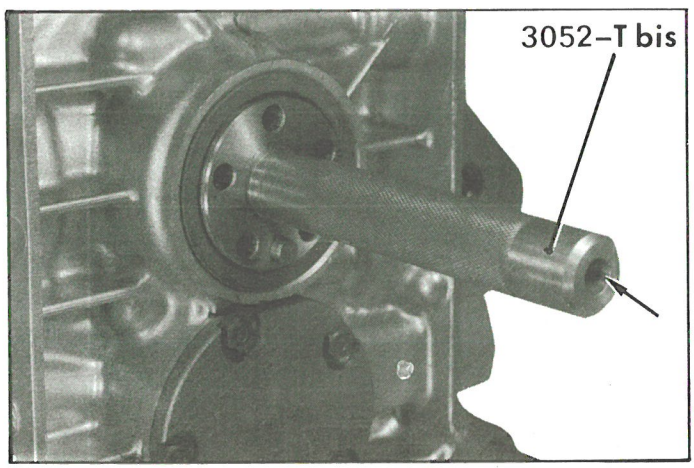

39. Centring the mainshaft in the crankshaft :

NOTE : Correct centring of the mainshaft in the crankshaft is assured by using either a needle bearing cage or a self-lubricating bush

A. Fitting with the needle bearing cage :

Apply grease (about 3 grammes) to the needle bearing cage

Use only silicon grease (G S I 160)

a) Place the needle bearing cage (1) in position

Arrange the side carrying the reference and maker's name towards the outside. The end of the needle bearing cage should stand down 5 mm below the end face of the crankcase.

Use mandrel MR 630 31/46 to attain this

b) Place the sealing bush (2) in position

Arrange the face carrying the reference and maker's name towards the needle bearing cage side and in contact with it.

B. Fitting with self-lubricating bush :

Immerse this bush for one hour in engine oil SAE 20, at ambient temperature
Allow it to drip

a) Fit the self lubricating bush (3) in position
It should stand down 5 mm from the end face of the crankcase.

Use mandrel 3052 T a, to attain this

After inserting the bush, free the mandrel with the aid of its central screw at « a »

b) Place the sealing bush (4) in position

IMPORTANT :
This sealing bush (4 mm thick) differs from bush (2) (3 mm thick) used with the needle bearing cage

Its fitting is also different

Arrange the sealing bush (4) with the face carrying the reference number and maker's name towards the outside of the engine.

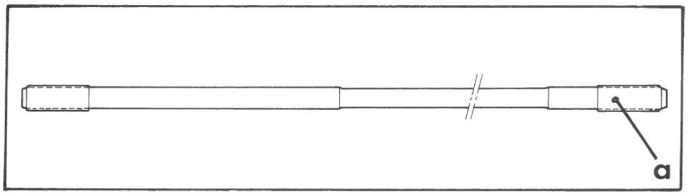

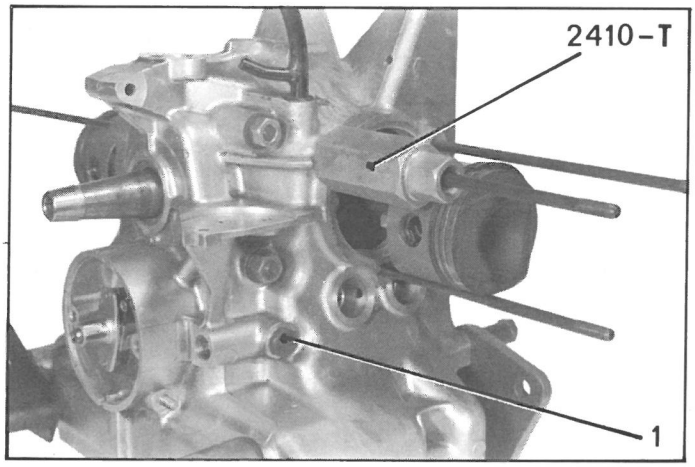

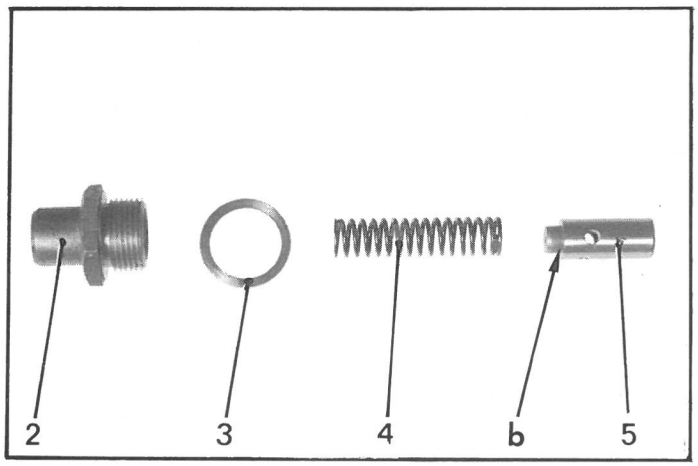

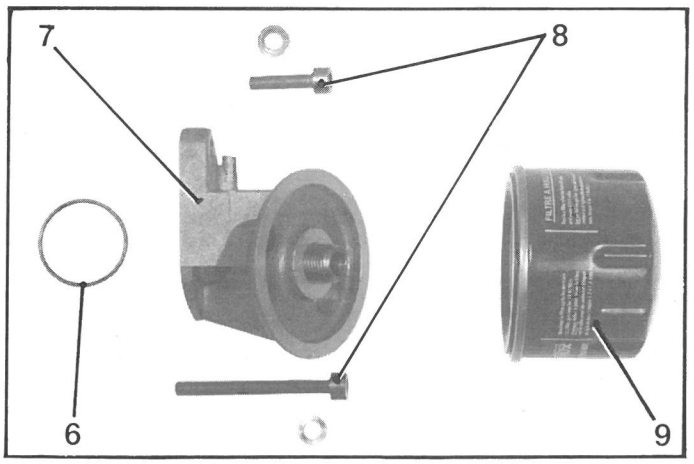

40. Fit the cylinder heads studs :

The threaded portion of the larger diameter « a » should be fitted on the crankcase side.

The shortest stud is placed on the lower part (stud driver 2410-T)

Place stud-driver at the base of the stud to avoid damaging it (bending it).

Fit :
- the oil drain plug (metalloplastic washer),
- the plug (1), or the oil pressure switch (copper gasket) Tighten to 30 m.N (3m kg)

41. Fit the relief valve :

Oil parts (engine oil)

a) *Engine fitted with ball type relief valve :*

Position :
- adjusting washers and spring in plug,
- ball

Tighten plug (copper gasket) to 40 - 45m.N (4 to 4.5 m kg)

b) *Engine fitted with piston type relief valve :*

Position :
- piston (5) with end « b » outwards,
- spring (4),
- plug (2) and its copper joint (3)

Tighten plug to 40 - 45 m.N (4 to 4.5m kg)

42. Fit the filter cartridge support (if necessary) :

Fit O ring seal (6) on the support for the filter cartridge (7)
Fit the two securing screws (8) for the support (copper washer on lower screw contact washer on upper screw)
Fit the filter cartridge (9)
Tighten as indicated by manufacturer.

43. Fit tappets :

Oil tappets before fitting

NOTE : If the engine crankcase carries the letter B stamped between guide tube bosses, the diameter of tappets is 24.2 mm

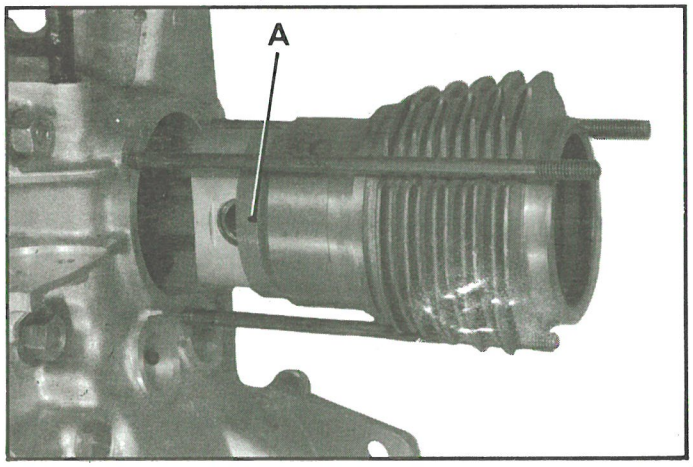

44. Fit cylinders *(Engines equipped with conventional scraper-collector rings) :*

a) Lubricate the pistons with an oiler, arranging the gaps in the three pistons rings at 120°

b) Place piston ring fitting fixture A on the piston :
- 425 cc engine (2 CV) piston ring fitting fixture 1654 T
- 435 cc engine (2 CV 4) piston ring fitting fixture 3063 T
- 602 cc engine (2 CV 6) (3 CV) piston ring fitting fixture 3002 T or MR 630 65/7

c) Fit the cylinder, previously oiled, without rotating it and the slots for the studs correctly positioned

d) Free the piston ring fitting fixture and bring the cylinder into contact with the crankcase

45. Fit the assemblies of cylinder and piston on the engine *(Engines fitted with U-FLEX scraper collector).*

Oil connecting rod small end
Offer the assembly cylinder piston on connecting rod, so that arrow on piston is pointing towards the front of the engine
Complete, if need be, positioning the gudgeon pin, by using the mandrel 1699 T
Fit the second gudgeon pin, circlip
Complete fitting of cylinder

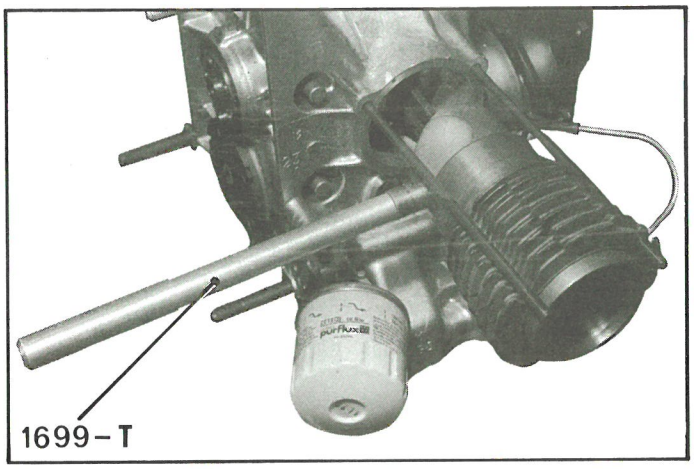

46. Fitting the cylinder heads :

a) Unscrew the adjusting screws for the rockers

b) Check and lubricate the balls ends of the rocker push rods which must be free from burrs, scratches, and signs of wear

c) *Insert the push-rods in the guide tubes. (coppered ball end on the rocker arm side).*

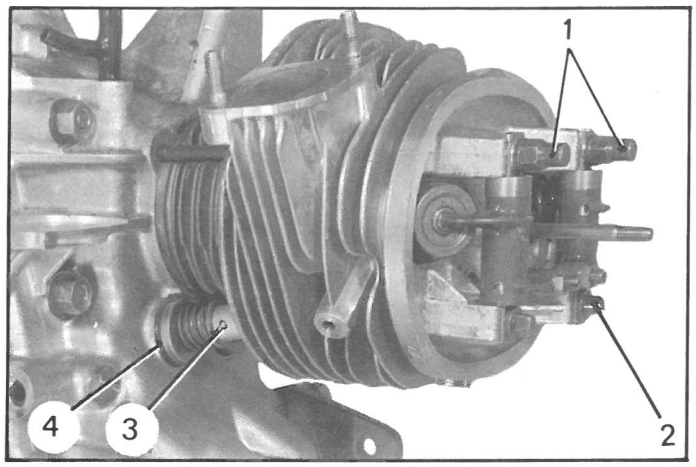

d) Fit the cylinder heads :

Place in position the three securing nuts (1) (copper washer under the upper nuts, steel washer under the lower nut)

Screw up lower nut until the cylinder head is in contact with the cylinder and the cylinder on the crankcase

Guide the tubes (3) so that the shoulders of the rubber seals (4) enter correctly in the crankcase bore

Screw up the upper nuts (1)

Provisionally tighten the three nuts securing the cylinder head to 10 mAN (1 m kg)

47. Fit the engine flywheel :

Fit new securing screws after each dismantling and tighten them to 40 - 45 mAN (4 to 4.5 m kg) while holding the flywheel with the aid of a screwdriver

Ensure that the assembly turns freely

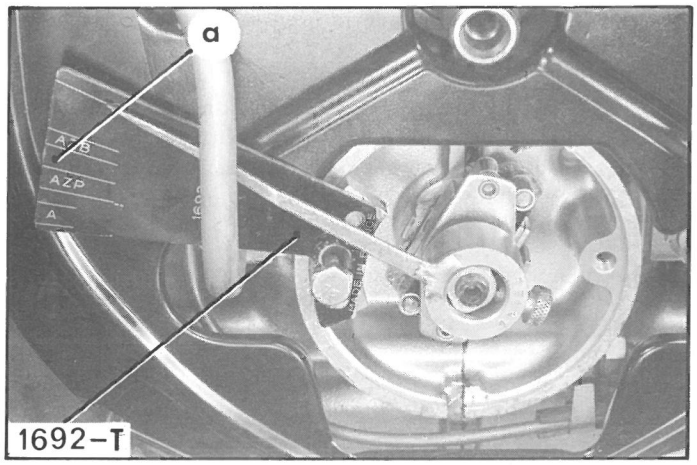

48. Fit distributor :

a) Check and adjust centrifugal advance :

- Check the angle of rotation of the cam, in relation to the camshaft, using graduated scale 1692 T
- Fit indicator needle on cam, pressing it down to fullest extent, and slightly tighten the retaining screw
- Turn flywheel to bring indicator needle of checking tool opposite mark O
- Gently rotate from right to left, on needle shaft without forcing

At the end of its travel the needle should be ;

- in zone « AZB » for distributors fitted on engines A 53 and M 4
- At point « a » between zones « AZB » and « AZP » for distributors fitted on engines A 79/0
- In zone « AZP » for distributors fitted on engines A 79/1 - M 28/1 and M 28

If the indicator needle comes to rest outside the zone corresponding to the type of distributor as indicated above, the travel of the weights must be adjusted by bending the clips (5) and (6) of the stops

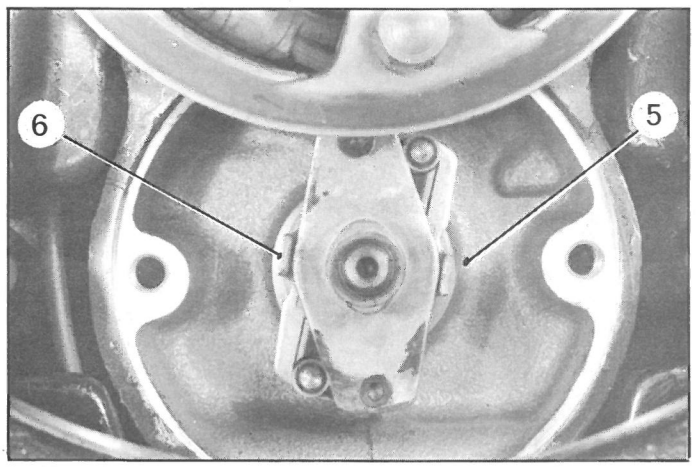

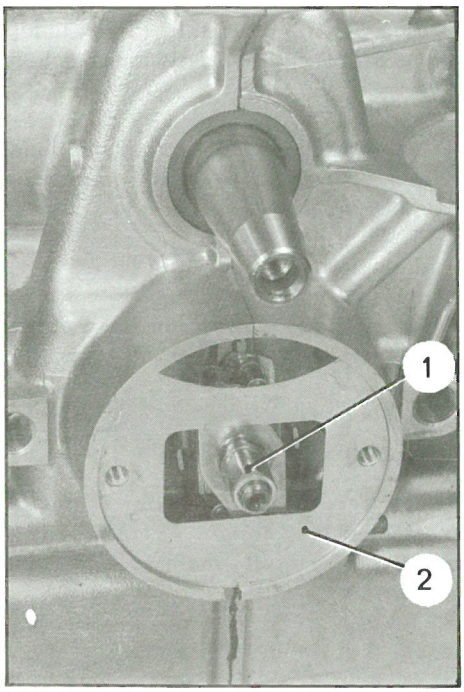

b) Fit the distributor :

Place the protection panel (2) (smeared lightly with grease, with its face against the distributor)
Offer up the distributor housing (6)

Screw up the securing screws (5) (plain washer)

c) Adjust the contact breaker gap :

Turn the engine flywheel so that one of the cam bosses (1) raises the contact to its maximum height

At this point, adjust gap to 0 40 mm (set of feeler)

Turn the flywheel again, so that the second boss of the cam raises the contact to its maximum height Again check the gap

If the difference is greater than 0 05 mm, turn the cam again

If the difference persists, it means that one of the cam bosses is worn (it must be replaced after having checked the camshaft as indicated in paragraph 25, this operation)

d) Fit the cover (3) and its gasket (4)

Tighten the securing screws

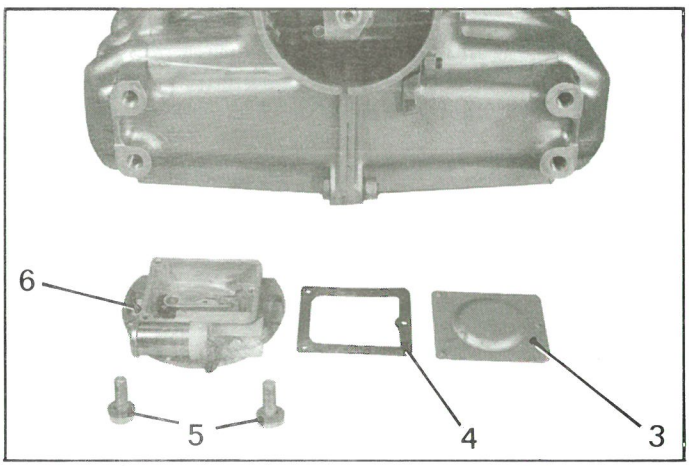

49. Check the static ignition timing :

a) Introduce a pin MR 630 51/15 of 6 mm diameter in the hole provided on the left hand side of the crankcase

b) Turn the engine slowly until the pin enters the hole in the engine flywheel The engine is then at the ignition point

4804

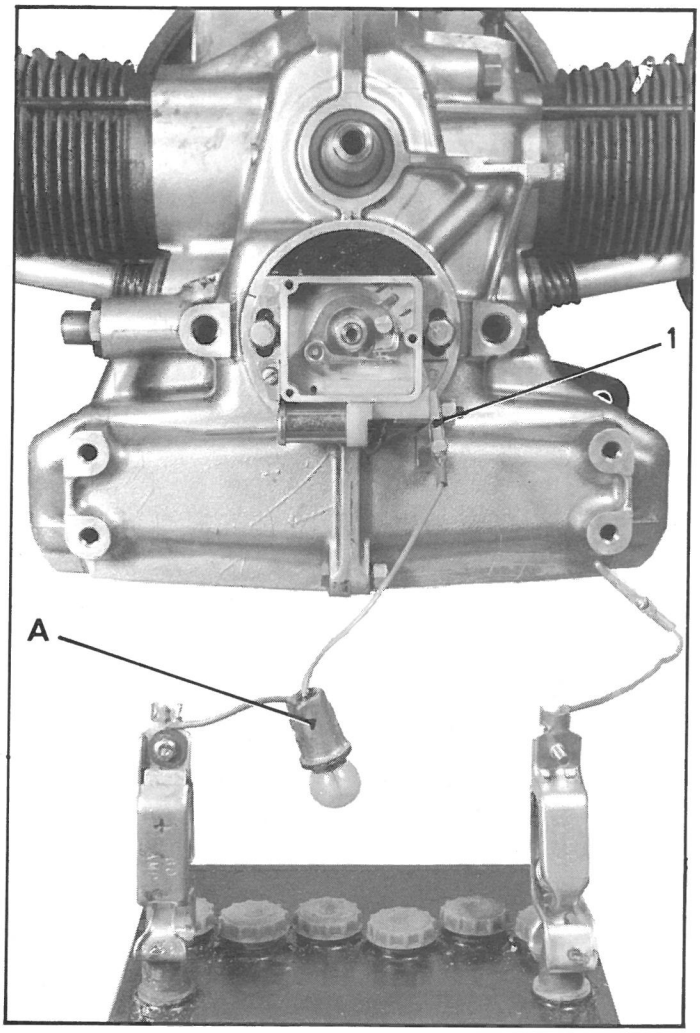

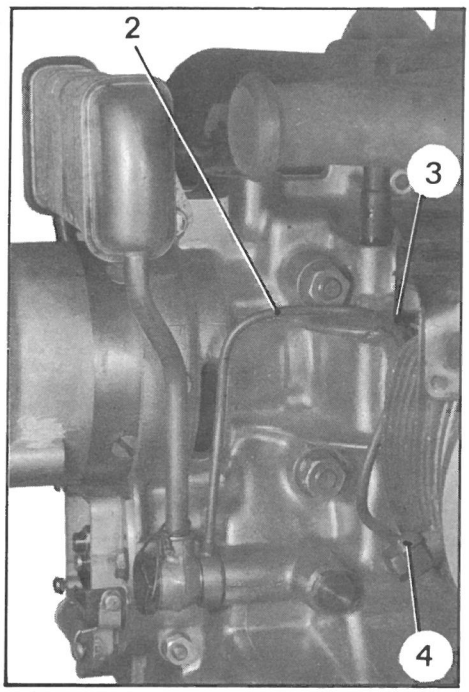

c) Connect the positive terminal of a battery (6 or 12 volts) to the terminal (1) of the distributor outlet inserting a test lamp of 6 or 12 volts in series

Connect the negative terminal of the battery to the engine earth

d) Check that the centrifugal advance weights are at their position rest

e) Loosen the two securing screws of the distributor

Find the exact point of opening of the contact breaker by turning the housing

The lamp will go out at this precise moment

f) Tighten the distributor securing screws

g) *Remove the pin from the engine flywheel.*

h) Turn the engine (by the flywheel) in the direction of running, when the lamp will light

Stop at the precise moment when the lamp goes out for the second time (at this point the engine will have made one revolution). It should be possible to insert the pin in the engine flywheel

If the hole in the flywheel has passed the pin the ignition is retarded : It will be necessary to re adjust the ignition timing on this cylinder

In no circumstances must the initial advance be less than :

12° (A 53 A 79/0 A 79/1 M 4 engines)
8° (M 28/1 M 28 engines)

The variation should not be more than 3° (1 1/2 teeth on the starter ring) between the static setting on one cylinder and that on the other

If it is, them cam must be replaced

Remove the pin and the test lamp from the battery

50. Fit the cylinder head lubrication tubes :

a) *Engines fitted with earliest model oil cooler :*

Fit the cylinder head lubrication tubes (2) (Place double gasket (4) on cylinder head joint)

Tighten the screws for the lugs securing the tubes (3) on the front cylinder head studs

Fit the protective sleeve on the tube

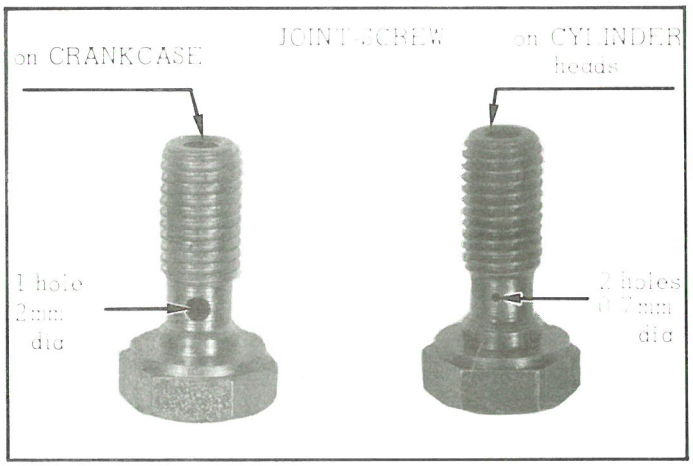

b) *Engines fitted with second type oil cooler :*

CARE : Do not reverse the calibrated union screws :
the calibrated screw on the crankcase has only one oil hole of 2 mm diameter
the calibrated screw fitted on each cylinder has two oil holes, each 0 7 mm diameter

Thoroughly clean these screws blowing them through with compressed air

Fit the tube in place without twisting

Fit (by hand) the calibrated union screw on the crankcase, then the calibrated union screws on each cylinder head Place a double copper joint on each pipe union
Tighten screwed unions to 12 13 m\N (1 2 to 1 3 m kg)
Tighten the screw securing the pipe clip (11)
(Fit the pipe clip with a rubber protection bush on the tube)

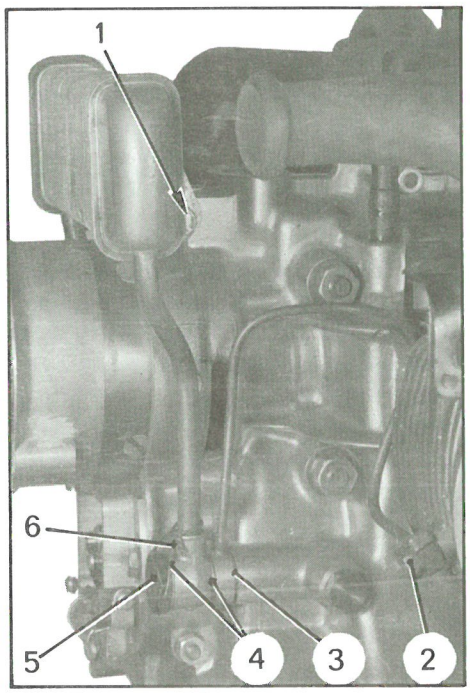

51. Fit the oil cooler :

a) *First type oil cooler :*

- Place in position the cooler fitted with joints (4) and screws (5)
Insert the screws (5) into the cylinder head lubrication tubes Fit joints (3) and tighten screws (5) to 27 30 m\N (2 7 to 3 m kg)
- Lock them by means of a piece of wire (6) passing through the hole bored in the head of screw and tied around the tube
- Fit the securing screw (1) Insert the distance pieces between the crankcase and the cooler clips (plain washer under the head of the screw under the nut) Tighten the screw (1) Tighten the calibrated union screw (2) to between 12 and 13 m\N (1 2 to 1 3 m kg)

b) *Second type oil cooler :*

1° Place in position *(as applicable)* protection plate (9)

2° Fit a protective sleeve on each tube of the oil cooler

NOTE : The protective sleeves must be renewed at each dismantling
This sleeve should stand down 2 mm below the end of the tube

3° Offer up the oil cooler, and centre the tubes in their bores

Start the union screws (10) by hand.
Tighten them to between 10 and 14 m\N (1 to 1 4 m kg)

4° Place in position the securing screw (7) on the crankcase,
Insert the two distance pieces (8) between the crankcase and the oil cooler clips (plain washers under the screw head plain and shakeproof washers under the nut)
Tighten the screw (7)

9246

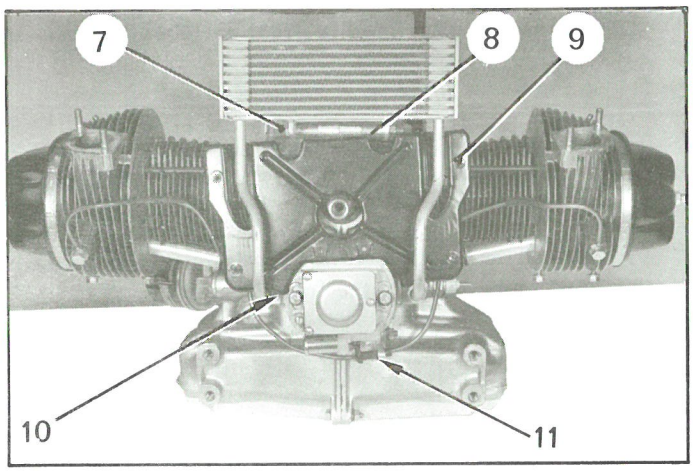

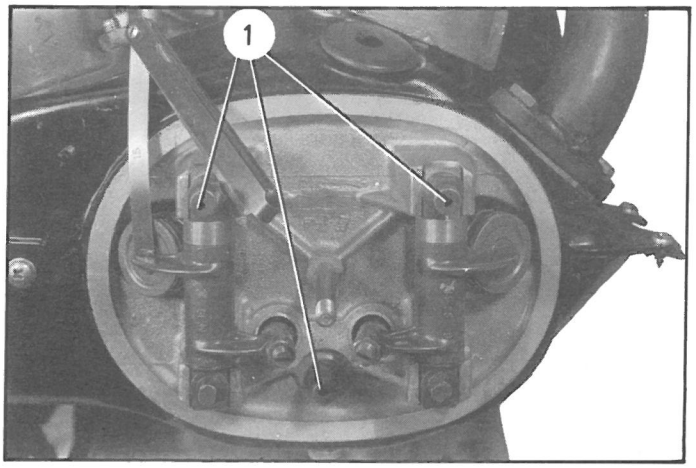

52. Assemble the engine :
(See relevant operation)

Fit :
- dynamo and its armature *(as applicable)*.
- petrol pump,
- fan cowl and cylinder cooling plates,
- inlet and exhaust manifolds,
- carburettor,
- breather,
- fan and drive belt for alternator,
- alternator *(as applicable)*.

Tension the belt.

53. Tighten finally the cylinder heads :

IMPORTANT : The final tightening of the cylinder heads must only be carried out after fitting and tightening the manifolds.

Tighten the three securing screws (1) to between 20 and 23 mN (2 to 2.3 m.kg)

Respect order of tightening as below :

- upper front nut,
- upper rear nut,
- lower nut.

54. Adjust the rocker clearance :

This adjustment must be made with the engine cold.

Adjust one valve of cylinder, when the corresponding valve of the opposite cylinder is at maximum opening.

Inlet and exhaust = 0.20 mm

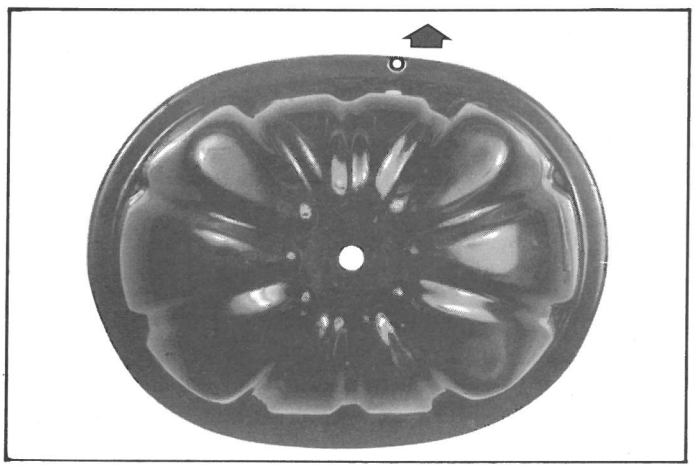

55. Fit the cylinder head covers :

Check that there is no roughness on the joint faces.

Stick the rubber gasket on the cylinder head cover only. (using BOSTIK 1400 or MINNESOTA F 10).

NOTE : On a certain number of engines, cylinder head covers are marked with the letter « O » cold stamped on the cover. This mark should be placed towards the top.

Moderately tighten nuts to between 5 and 7 mN (0.5 to 0.7 m kg).

NOTE : A badly fitting rubber joint, or incorrect tightening of the nut, may entail a total loss of the engine oil.

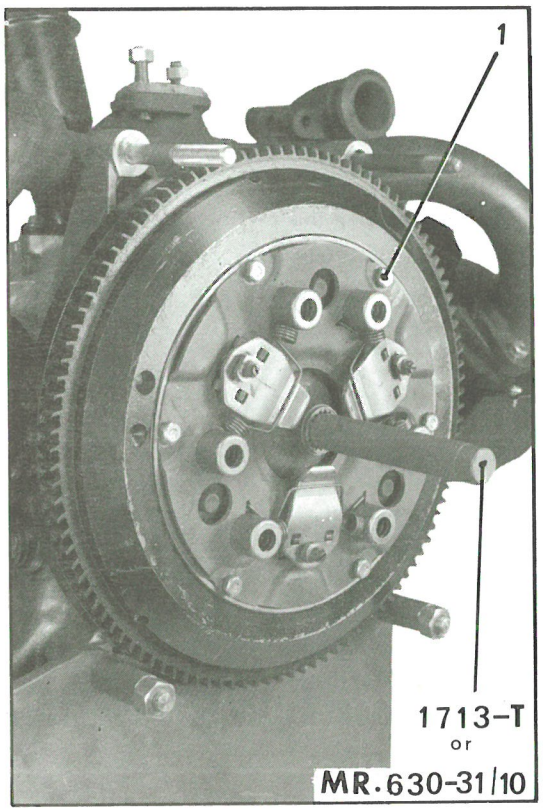

56. Fitting the clutch :

a) *Centrifugal clutch :*

Fit the centrifugal clutch coupling ring with lined segments

Tighten the screws to between 9 and 14 m\N (0 9 to 1 4 m kg)

b) *Conventional clutch :*

Check the clutch disc : the linings must be dry, free from oil spots and the rivets must stand down below the linings

Ensure that the disc slides freely on the gear box mainshaft splines

Ensure that the contact faces of the disc on the flywheel and the clutch plate are perfectly clean as well as the contact faces on the hou sings and engine flywheel

Fit the clutch mechanism to the engine fly wheel : Centralize the disc using mandrel 1713 T (for discs with splined tube) or MR 630 31/10 (for discs with toothed hub rings)

While tightening the screws (1) ensure that the mandrel slides freely

Tighten the screws to between 10 and 13 m\N (1 to 1 3 m kg) (spring washer)

Free mandrel

57. Remove the engine from its support MA 630 43/4

58. Fit the two centring dowels on the gearbox cou pling studs

NOTES : After fitting the engine in the vehicle :

1° Fill up with engine oil (TOTAL altigrade GTS 20 W 50 or GT 20 W 40)

2° Check the oil pressure

3° Adjust the slow running

A 53 engine	: 600 to 650 rpm
A 79/0 engine	: 800 to 850 rpm
A 79/1 engine	: 800 to 850 rpm
M 4 engine	: 750 ± 50 rpm
M 28/1 engine	: 750 to 800 rpm
M 28 engine	: 750 to 800 rpm

OVERHAULING A CYLINDER HEAD

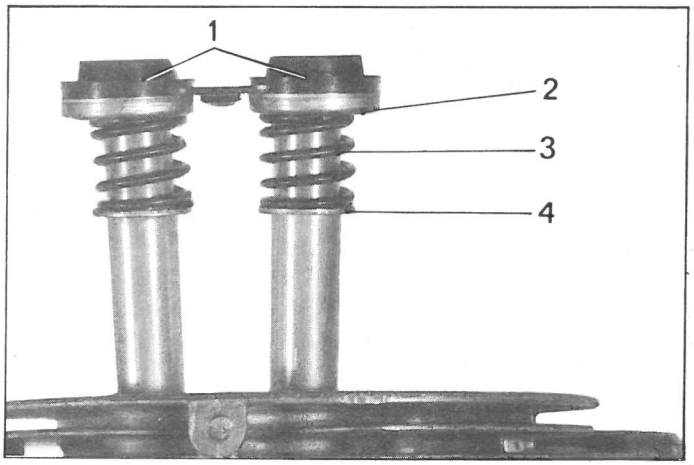

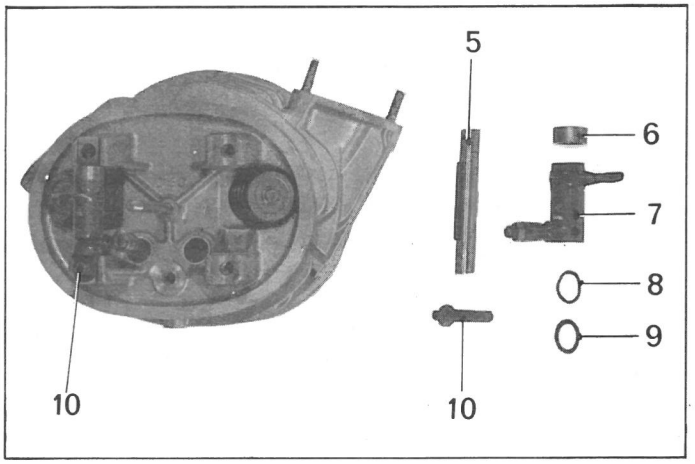

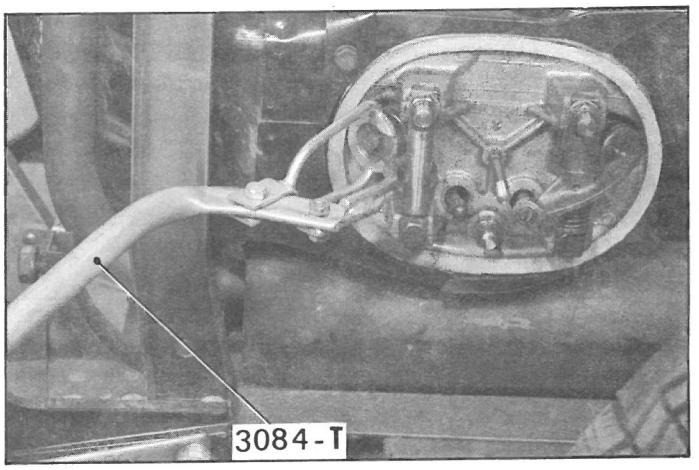

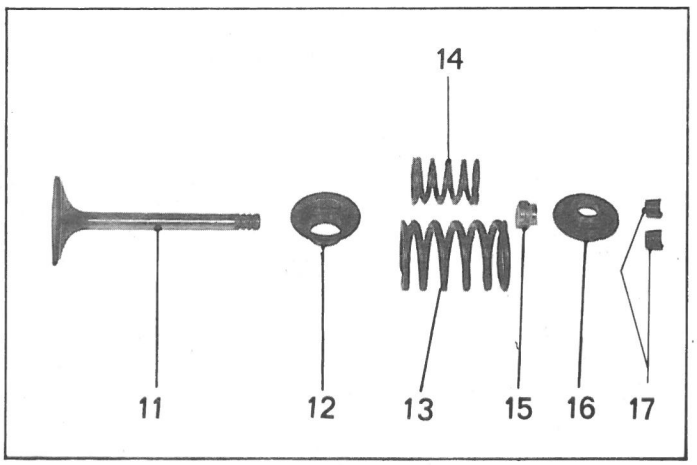

DISMANTLING

1. Strip the cylinder head :

Free :
- rubber gaskets (1),
- cups (2),
- springs (3),
- thrust washers (4).

2. Remove the rocker spindles :

a) Remove the securing screws (10) (using spanner 1677-T) (if necessary).

b) Free :

- thrust washers (9),
- flexible washers (8) or springs *(early type cylinder head)*
- rockers (7),
- distance pieces (6).

3. Hold the cylinder head in vice (support 3001-T bis)

Bring cylinder head supports stop screw in contact with valves, screwing by hand.

4. Remove the valves :

a) Place the spindles in position and secure them with the support screws.

Compress the valve springs, using tool 3084-T applying pressure under the rocker spindles.

b) Free :

- cotters (17),
- cups (16),
- springs (13) and (14),
- centring collars (12),
- valve stem seals (15).

c) Remove the cylinder head from support

Free :
- valves (11),
- rocker spindles (5).

INLET

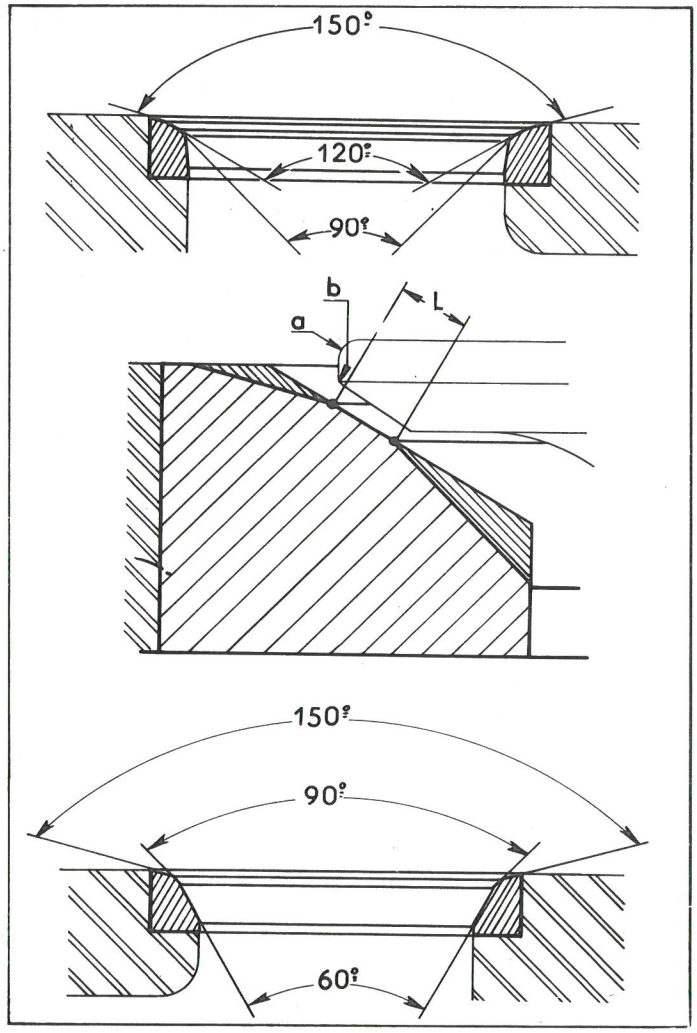

EXHAUST

ASSEMBLY

5. Grinding the valves :

Use a valve grinder

a) Valves seat angles
Inlet 120°
Exhaust 90°

b) Put a radius of 0 5 mm approximately on the edges of the valve head at « a » and « b ».

6. Grinding the valve seats :

Using the following grinding wheels

a) Inlet valve seats
- for the valve seat face : 120°
- for top clearance : 150°
- for bottom clearance : 90°

b) Seats for exhaust valves
- for the valve seat face : 90°
- for top clearance : 150°
- for bottom clearance : 60°

7. Lap the valves :

Use lapping tool 1615-T

- Valve : The large diameter of the valve seat face must be equal to the large diameter of the valve.

- Valve seat : The width of the valve seat face must be :

Inlet L = 1.45 mm max.
Exhaust L = 1.80 mm max.

ENGINES	Valves	Angle	ϕ of head (mm)	ϕ of stem (mm) (under head)	Length (mm)
A 53 - A 79/0	Inlet	120°	39	$8^{-0.025}_{-0.040}$	90.8 ± 0.25
(435 cc)	Exhaust	90°	32	$8.5^{-0.035}_{-0.050}$	88.65 ± 0.25
A 79/1	Inlet	120°	39	$8^{-0.005}_{-0.035}$	$89.57^{+0.45}_{-0.25}$
(435 cc)	Exhaust	90°	34	$8.5^{-0.020}_{-0.050}$	$88.18^{+0.45}_{-0.25}$
M 4	Inlet	120°	39	$8^{-0.025}_{-0.040}$	88.8 ± 0.25
(602 cc 1968)	Exhaust	90°	34	$8.5^{-0.035}_{-0.050}$	86.5 ± 0.25
M 28/1 - M 28	Inlet	120°	40	$8^{-0.020}_{-0.035}$	$88.5^{+0.45}_{-0.25}$
(602 cc 1968 ⟶)	Exhaust	90°	34	$8.5^{-0.035}_{-0.050}$	$86.95^{+0.45}_{-0.25}$

8. Clean very carefully the cylinder heads in order to remove all traces of emery in the gas ducts. Blow these passages and lubrication ducts through with compressed air.
If the latter are obstructed, soak the cylinder head in a bath of cellulose solvent for about one hour. Then blow the ducts through again with compressed air.

9. Calibrate the valve :

Engines	Springs		Length decom - pressed	Length com- pressed	Load in kilos	Length under load	Load in kilos
A 53 A 79/0 M 4	Up to September 1963	outer	38 mm	24 mm	38 to 42	31 mm	18 to 21
		inner	28 mm	14.5 mm	7.5 to 8.3	21.5 mm	3.6 to 4.4
	From September 1963	outer	38.6 mm	24.4 mm	47.3 to 48.3	31.7 mm	21.2 to 24.6
		inner	28.8 mm	15 mm	9 to 10	22.3 mm	3.7 to 4.7

Engines	Springs	Length under load	Load in kilos	Length under load	Load in kilos	Direction of spiral
A 79/1 M 28/1 M 28	Outer	31.4 mm	28 ± 1.5	24.15 mm	42.5 ± 2	right-hand
	Inner	24.4 mm	12 ± 1	17.15 mm	25 ± 1.5	left-hand

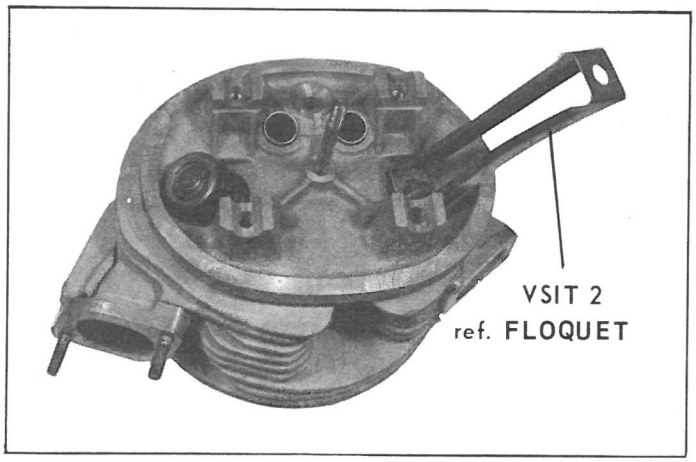

10. Fit the valves :

a) Oil the valve stems and seat faces. Place the valves in position.

b) Secure the cylinder head in the vice using stand 3001-T bis and fit the spindles.

Bring the end of the stop screw into contact with the valve, screwing by hand.

c) Place in position the valve stem seals : Fit the plastic centring cap on the end of each valve stem.

Slide the seal on the cap.

Lower the seal onto the guide.

Use compressed tool VSIT 2, reference FLOQUET, to finish the assembly.

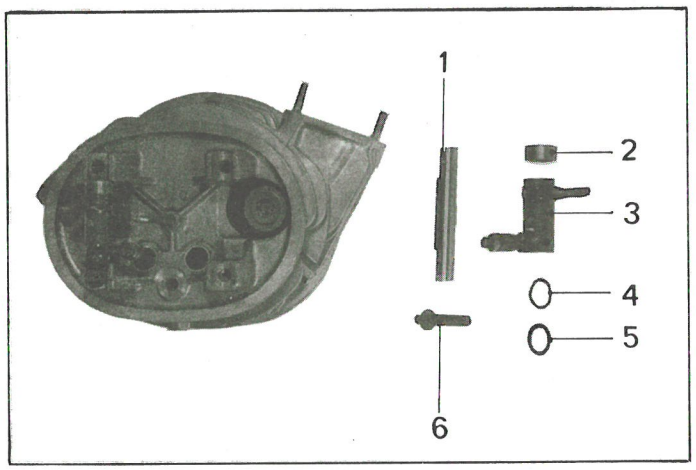

d) Fit :
- centring collars,
- springs,
- cups.

Compress the springs using spring compressor 3084-T.

Fit the locking cotters.

Remove the cylinder head from the stand.

11. Fit the rockers :

Remove the rocker spindles.

Place on each spindle (1) :
- a thrust washer (5),
- a flexible washer (4) *(new type cylinder head)*,
- or a spring *(old type cylinder head)*,
- the rocker (3),
- the distance piece (2).

Fit the rocker spindle thus equipped on the cylinder head, tighten the screw (6) (using spanner 1677-T, if necessary).

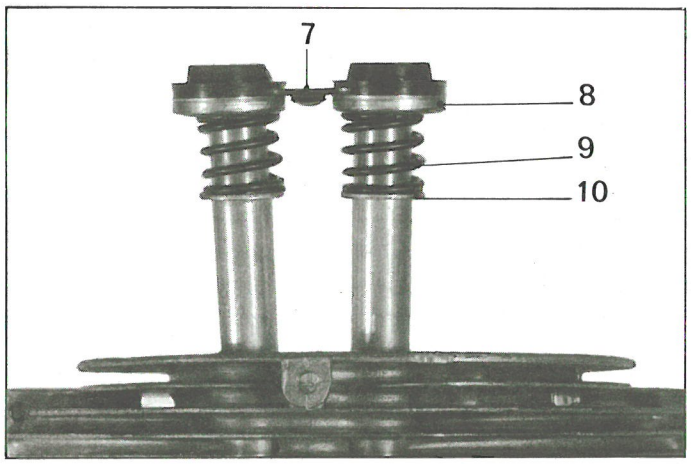

12. Place in position on the push-rod tubes :

- thrust washers (10),
- springs (9),
- cups (8),
- double joint (7).

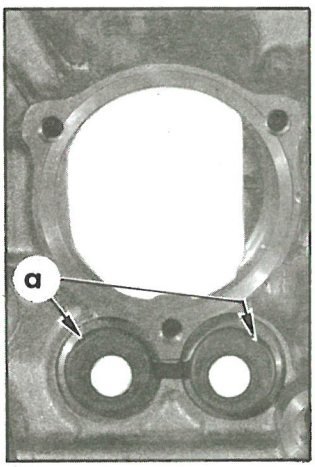

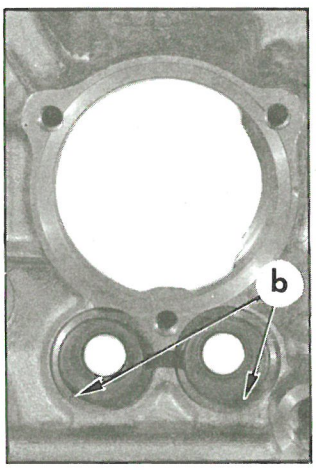

NOTE : As from December 1972, the push-rod tube joints have no centring heel in the crankcase and are positioned according to engine type.

The fitting of this type of gasket is not possible on engines produced before this date.

Engines M 28 and M 28/1 (602 cc) :

Position flats « a » upwards

Engines A 79/1 (435 cc) :

Position flats « b » downwards.

OVERHAULING A GEARBOX

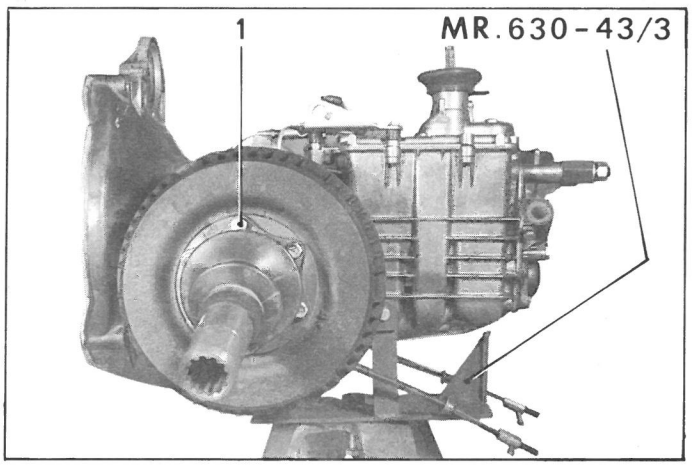

DISMANTLING

1. Drain the oil.

2. Place the gearbox on support bracket (MR. 630-43/3).

3. **Remove the brake drums :**

Remove the securing screws (1) or nuts *(as applicable)*.

Free the drums.

4. **Remove the wheel cylinders :**

Remove the brake piping.

Open the brake shoes to maximum extent by operating adjusting cams.

Remove the cylinder securing screws and remove the brake cylinders.

5. **Remove brake shoes :**

On each side :

a) Move the adjusting cams to the closed position.

Remove the caps (2) holding the thrust, springs by turning them one quarter of a turn (tool 3556-T)

Remove the guide stems and springs.

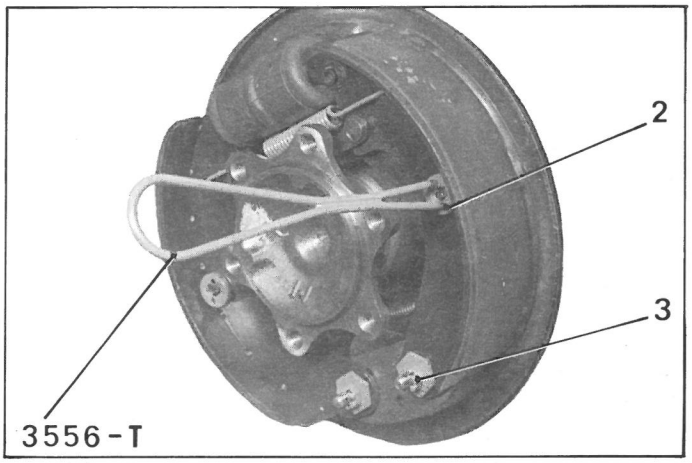

b) Unpin the nuts (3) from the cams, remove and free washers and adjusting cams.

c) Remove the brake shoes :

Remove the shoes from the spindles, tipping the rear point pins shoe upwards.

Unhook the return spring from the shoes as well as the brake cable from the lever.

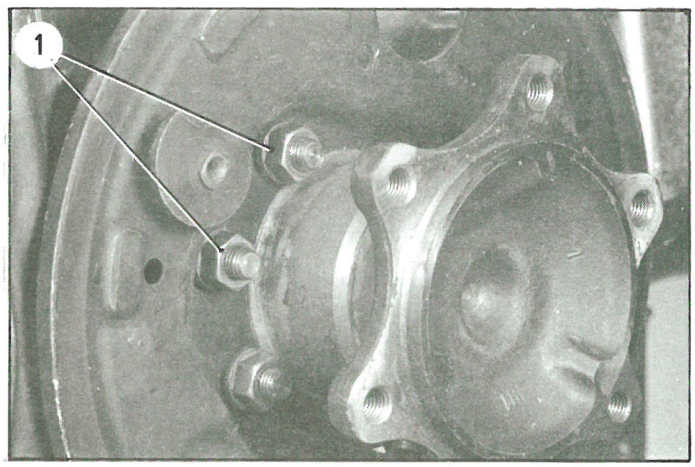

6. Removal of brake plates :

On each side :

a) Remove the securing nuts (1).

b) Free the assembly brake plate and shaft outlet bearing.

NOTE : If the gearbox is dismantled for overhaul without changing :
- either the gearbox housing,
- or the crown wheel and pinion,
- or the differential bearings,
- or the drive shaft bearings.

Mark the adjusting shims between the differential and the hubs, thus obviating readjustment of the tooth clearances.

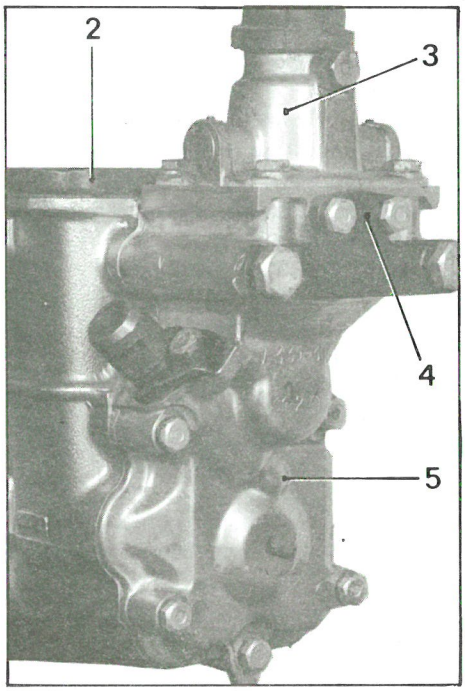

7. Remove the covers :

Remove :

a) The upper cover (2) (*first fitting*), or the upper cover (6) equipped with gear control forks lever (*second fitting*).

NOTE : The spring for locking ball on the fork spindle of 2nd - 3rd gears is housed at « a » in the upper cover (6).

b) The fork control (3), holding lever inclined towards the left (*gearbox equipped with selector fork tip (4)*).

c) The rear cover (5)

d) Adjusting shims (8) (*as applicable*)

NOTE : If the rear cover (5) and the rear bearing (7) of mainshaft are to be used again, **mark position of adjusment shims (8).**

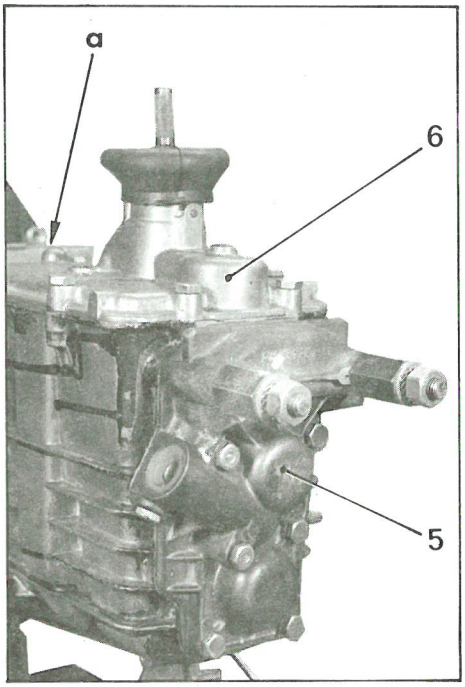

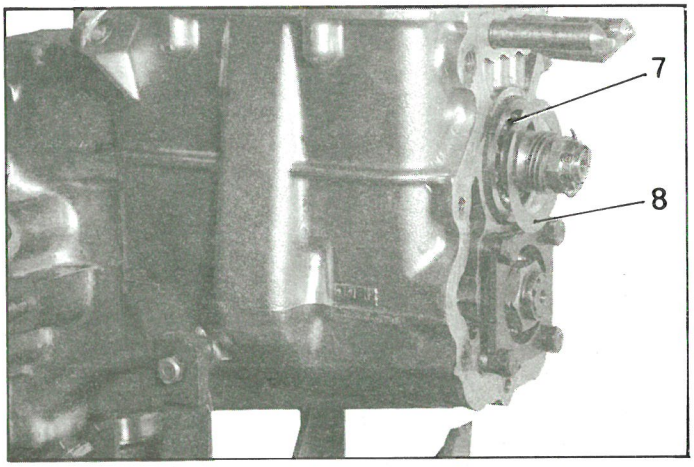

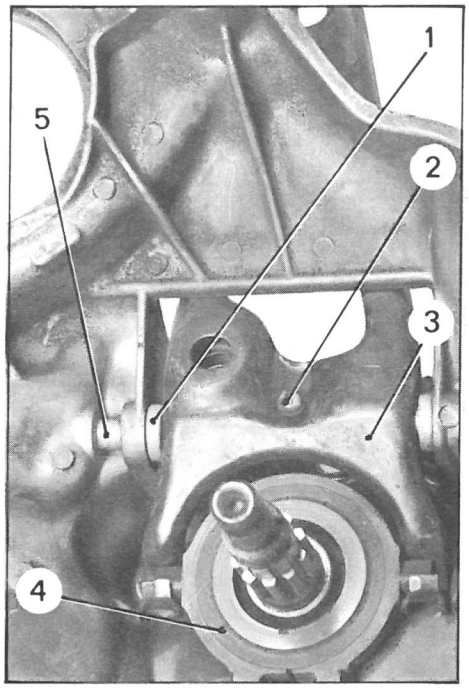

3921

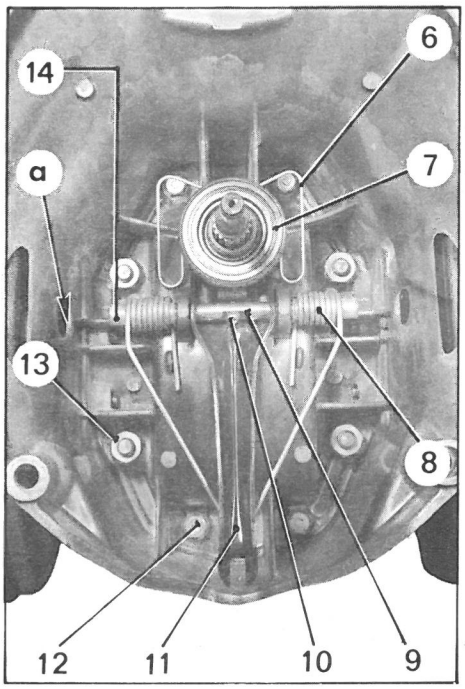

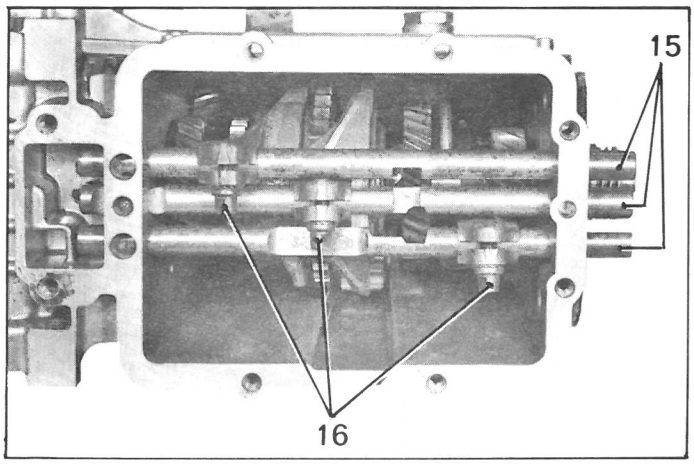

8. Remove the clutch stop and its control fork :

a) Gearbox with *graphite ring for clutch withdrawal :*
- Remove the selector fork spindle (2),
- Tap out the spindle (5),
- Free :
- the two washers (1)
- the fork (3) with its graphite ring
- the return spring.

b) Gearbox with *ball thrust bearing for clutch withdrawal :*
Remove :
- the retaining clip (6),
- the thrust bearing (7),
- the screw (10) for locking the spindle,
- the spindle (9) by passing it through one of the slits « a » in clutch housing,
- the spring (8) the nylon bushes for sound-deadening fork (11).

9. Remove the clutch housing and the differential :

- Remove the screws (12) and the securing nuts (13),

- Free the clutch housing supporting the differential to prevent it falling.

NOTE :

Mark the position of the conical bearing cages of the differential (left and right-hand).

10. Remove the forks and the spindles :

a) Unscrew the screws (16) holding the forks on the spindles (use spanner 1677-T, if necessary).
Free the three spindles (15) rearwards, rotating them half a turn to unlock them.
Block the holes to prevent the fork locking balls from escaping.

b) Remove :
- 1st gear-reverse gear selector fork,
- 2nd-3rd gear selector fork.

c) Recover the locking balls and the springs.

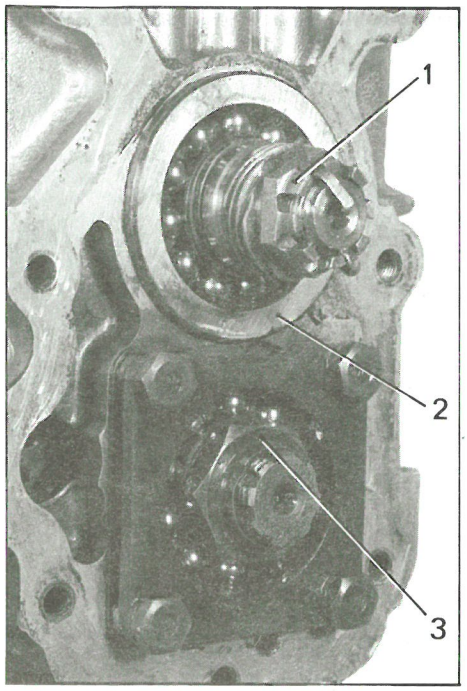

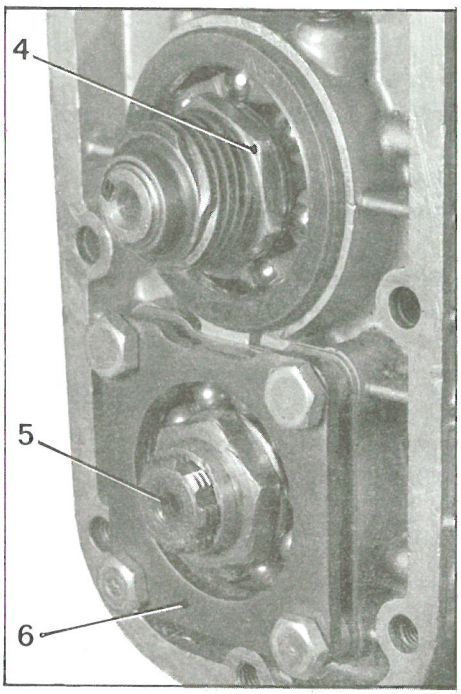

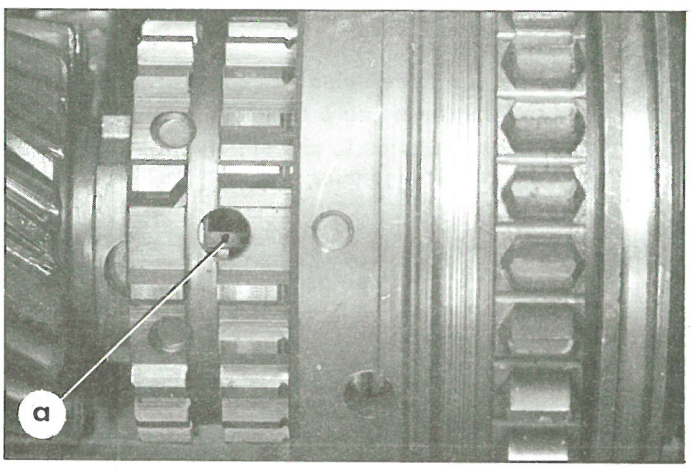

11. Remove the primary shaft :

a) - Engage two gears.

b) - Using chisel, remove the metal turned over into the nut (3) and unpin nut (1) *(as applicable)*.
- Remove the nuts (1) (right-hand thread) and (3) (left-hand thread).

c) Remove the speedometer screw, the distance piece and the flexible washer, if fitted (see illustration opposite).

NOTES :

1°) *Since October 1966*, the tapered distance piece the speedometer screw and nut have been replaced by a speedometer screw (4), acting as a nut and locked by metal turned over.
The reverse gear reduction pinion is fitted on teeth instead of splines.

2°) *(Vehicles built since January 1971) :*
The primary shaft has been modified :
The groove for the needle bearing race for retaining the circlip and the hole for removing the circlip have been discontinued:monobloc needle bearing cage has been fitted.

d) Drive out the bearing (2) towards the rear of the gearbox by tapping on the pinion with a copper drift.

e) Remove the reverse gear pinion and the distance piece.

f) Engage overdrive. Free the primary shaft and the pinions from inside the gearbox.
NOTE : Hold the monobloc needle bearing cage in the main shaft, with a slightly curved wire introduced into hole « a » of 2nd-3rd sliding gear.

g) Disengage the overdrive fork.

12. Remove the bevel pinion :

a) Remove the bearing retaining plate (6) with its four distance pieces.

b) Drive out the bevel pinion towards the front of the housing, tapping on the end with a copper drift.

c) Free the pinion, and leave the intermediate gear train in the bottom of the housing.

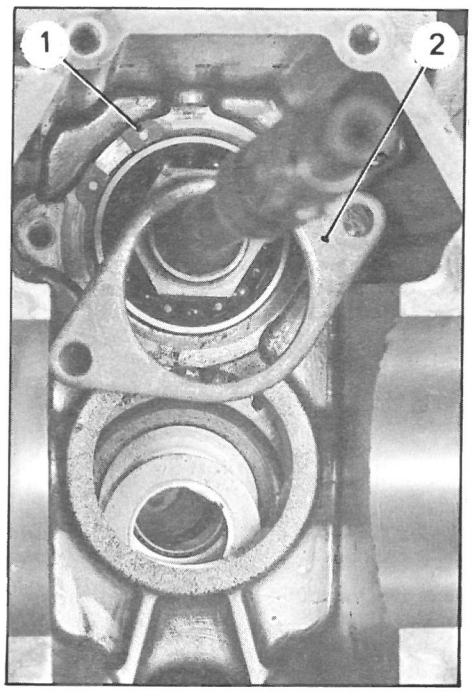

13. Remove the driving shaft and the intermediate gear train :

Remove the bearing retaining flange (2) from the driving shaft.

a) If the toothing of the driving shaft has a smaller diameter than the one of the bearing, disengage the latter from the differential side.

b) If the toothing has a diameter larger than the one of the bearing :
- Remove the circlip (1),
- Disengage the driving shaft from the inside of the gearbox. If necessary, drive out the bearing from the casing by tapping on the outer cage with a tube.

c) Remove the intermediate gear train.

d) Disengage the rear bearing of the intermediate gear train using a tube passing inside the gearbox (tube ϕ outside 51 mm, inside diameter 43 mm, length 290 mm).

NOTE : If the bevel pinion, the bearings and the gearbox housing are to be used again, **mark the adjusting shims for bevel pinion distance** *(gearbox with gear change lever on rear gearbox housing).*

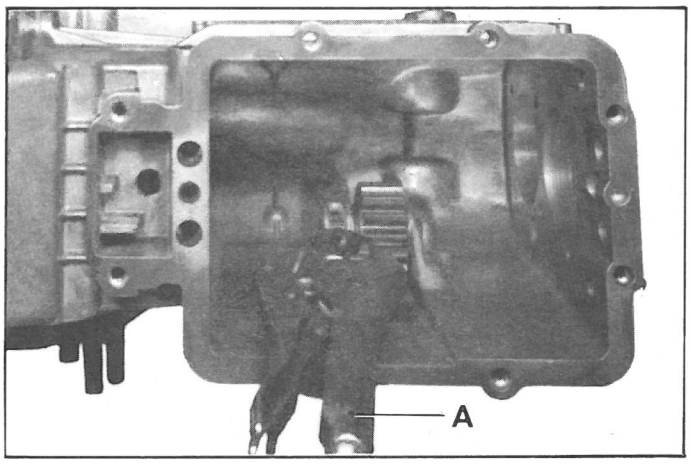

14. Remove the reverse speed pinion :

Remove the Mecanindus retaining pin from the spindle.

Use gripping pliers A, having previously inserted a 4 mm split pin inside the Mecanindus pin.

Withdraw the spindle. Free the reverse speed pinion.

15. Remove the oil drain and filler plugs.

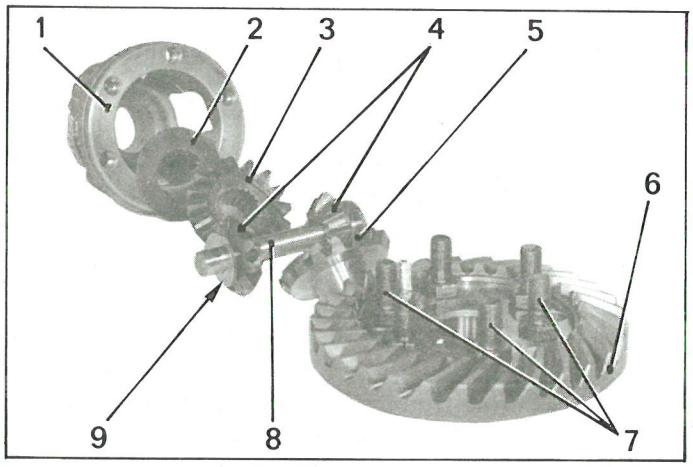

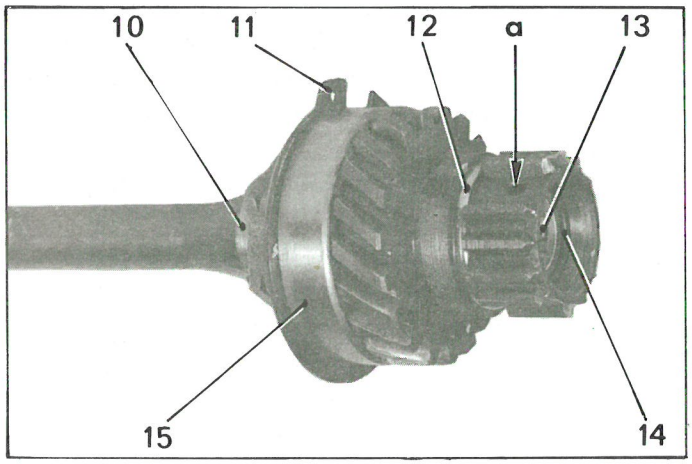

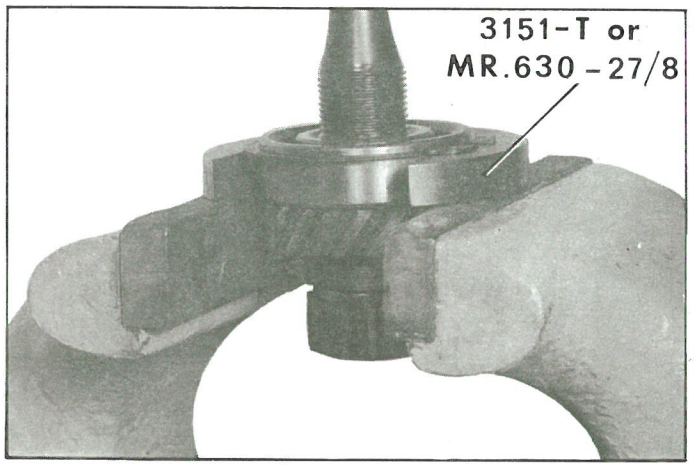

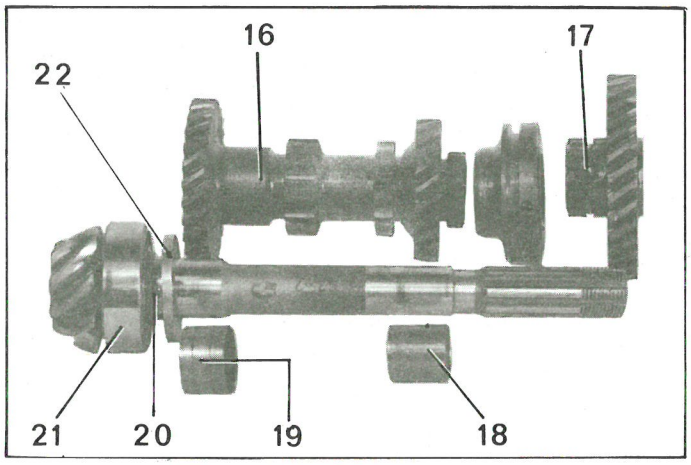

16. Dismantle the differential :

a) Remove the conical inner bearing cages (use extractor 1750-T with half shells 1736-T and pressure pad 1743-T or extractor 2405-T).

b) Remove the screws (7) :
- Free the crown wheel (6) from housing (1).
- Remove the planet wheel (5) (crown wheel side)
- Tap out the spindle (8).

c) Remove :
- the two satellite pinions (4) and their adjusting washers (9),
- the second planet wheel (3),
- the fibre washer (2).

17. Stripping the main shaft :

Remove the locking metal from the nut (10), using a chisel.
Remove the nut (10) (left-hand thread).
Remove the bearing (15) ; to do this :
- Fit the stop ring (11).
- Place the pinion (see illustration opposite), with the thrust ring bearing on block 3151-T or MR. 630-27/8 and drive the shaft from the bearing using a press.

Remove the stop ring (11).
Remove the synchronizing circlip (12).
Renew the synchronizing circlip after each overhaul.
Remove the bearing locking circlip (14) from the needle cage (13), using a 2 mm pin passing through the hole « a ».
Remove the needle bearing cage and distance piece (as the case may be).

18. Strip the bevel pinion and intermediate gear train :

a) *Gearbox with intermediate gear train and its thrust washer :*
Remove :
- the fixed thrust washer (22),
- the circlip (20),
- the bearing (21), using a tube and a press if necessary),
- the synchronizing circlip (17) from the step-down gear pinion,

Renew the synchronizing circlip after each overhaul.
Remove the bushes (18) and (19) from the bore of the intermediate gear train (16).

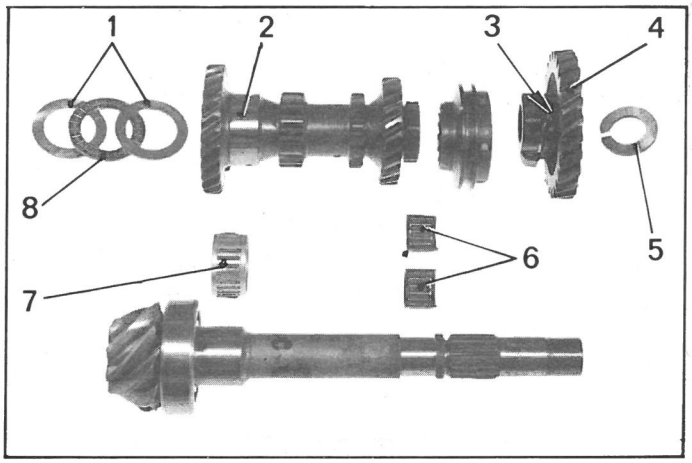

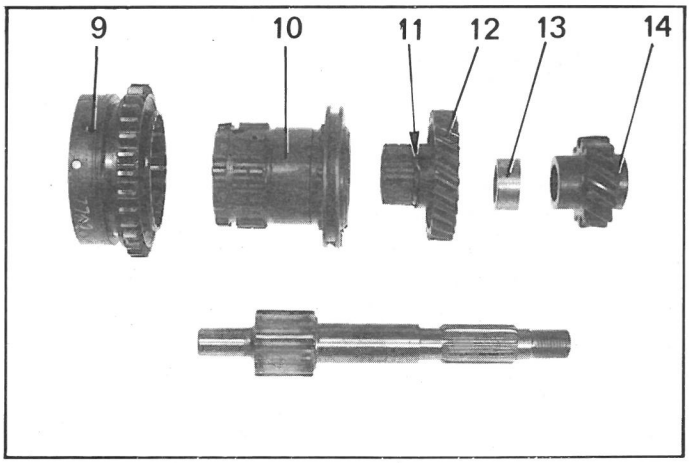

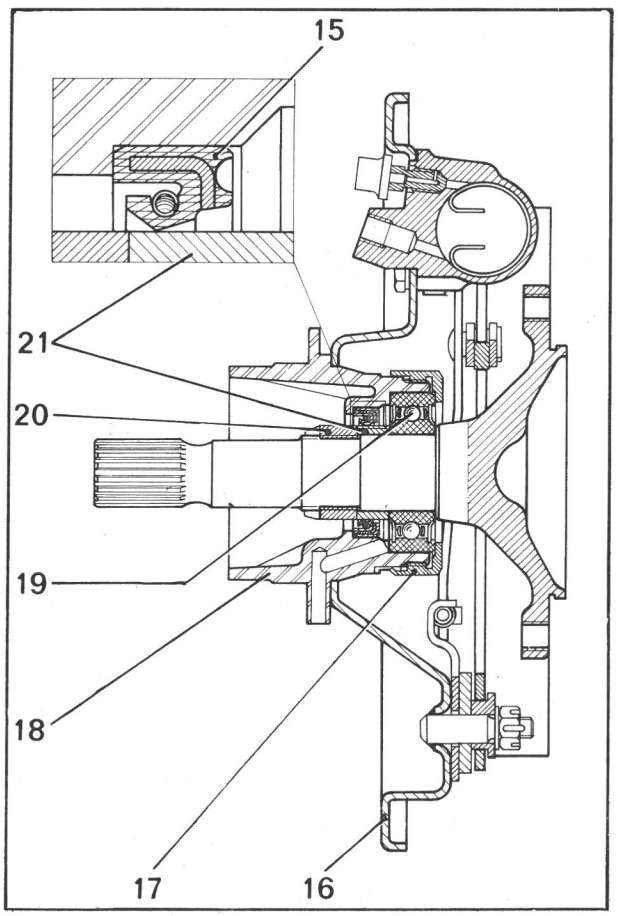

b) *Gearbox with intermediate gear train and its needle bearing thrust race :*
Remove :
- the needle bearing thrust race (8) and its two thrust washers (1),
- the needle bearing cage or the two needle bearing cage halves (as applicable),
- the synchronizing circlip (3) from the step-down gear (4).

Replace the needle bearing cage after each overhaul.
Remove :
- the needle bearing cage (7) from the bore of the intermediate gear train (2),
- the adjusting washer for the conic distance of the bevel pinion (as applicable).

NOTE : If the gearbox overhaul does not entail changing the gearbox housing, the crown wheel and pinion or the step-down pinion, retain the adjusting washer to avoid having to re-set the conic distance.

19. Strip the primary shaft :

Remove :
- 1st-reverse gear sliding pinion (9),
- 2nd-3rd gear sliding pinion (10),
- 2nd gear idler pinion (12),
- 2nd gear idler pinion synchronizing circlip (11).

Renew the synchronizing circlip after each overhaul.

20. Strip the brake backplate :

- Clamp the differential shaft in a vice fitted with soft jaws (to prevent damage) holding it by the driving plate (18).
- With a chisel knock out the metal of the nut and remove the nut (20) locking the differential shaft.
- Press out the differential shaft from the bearing, resting the back plate (16) on two vee blocks.
- Disengage the back plate from the bearing (18).

a) *Vehicles fitted with gearbox having the gear change lever on the upper cover :*
Hold the bearing (18) in a vice.
Unscrew the bush-nut (17) (use a chain spanner or strip spanner).
Remove :
- the sealing bearing (19),
- the distance spacer (21),
- the sealing bush (15).

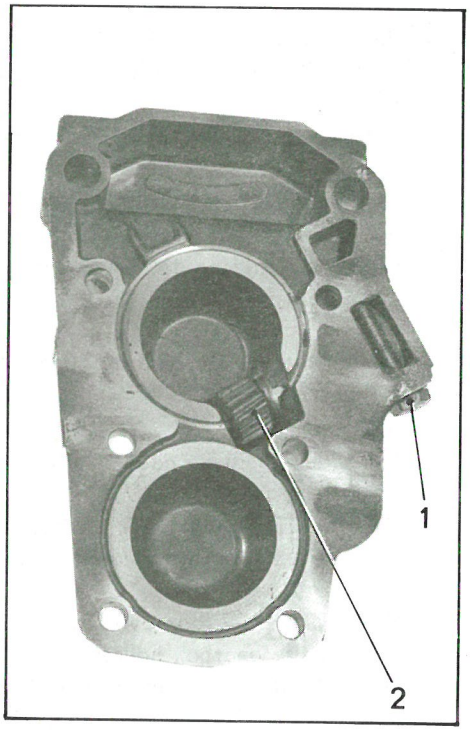

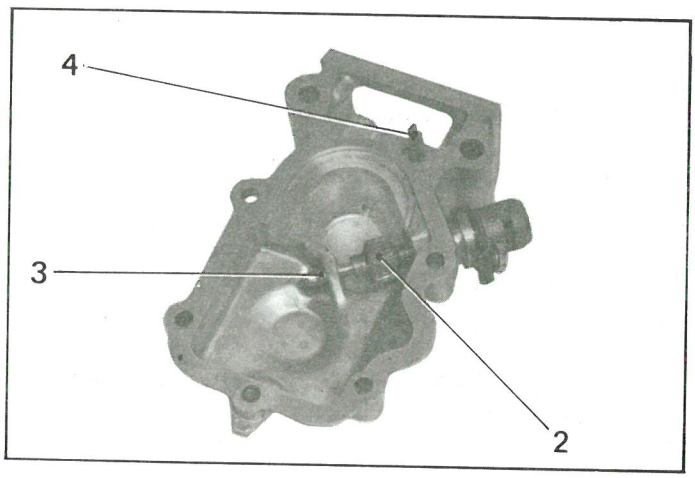

3771

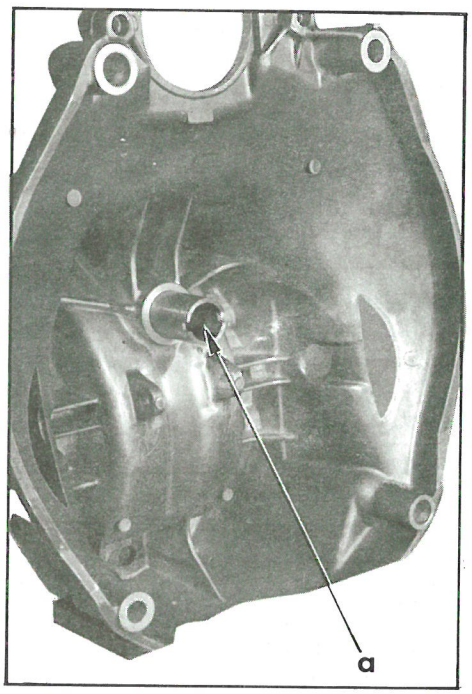

b) *Vehicles equipped with gearbox having the gear change lever on the rear cover :*
Using a chisel, remove the locking metal from the bush-nut and remove the bush-nut (use spanner 1926-T).
Free the bearing using a bronze drift.
Drive off the sealing bush from the hub.
Remove, if necessary, the oil deflector from the hub.

21. Stripping the wheel cylinders.
(See relevant operation).

22. Strip the rear cover :

Remove :
- the stop-screw (1) *(as the case may be)*,
- the speedometer drive and pinion (2),
- the thrust ring (3) *(as the case may be)*,
- the guide finger (4) *(on gearboxes thus equipped)*.

Disconnect the pinion from its plastic support *(as applicable)*.

23. Strip the clutch housing *(first fitting) :*

Remove :
- the oil retaining cup *(gearboxes on vehicles equipped with centrifugal clutch mechanism)*.
- or the bearing *(gearboxes fitted on vehicles equipped with a conventional clutch mechanism.*

24. Thoroughly clean all the parts.

PREPARATION.

25. Prepare the clutch housing :

a) *First fitting :*
- Fit the oil retaining cup using a mandrel MR. 630-32/14 *(gearbox for centrifugal clutch)*.
- Fit the bearing *(gearbox for conventional clutch)*.

b) *Second fitting :*
Check that the inner bore at « a » of the hub support for the clutch stop is not worn *(traces of threads in driving shaft oil return)*.

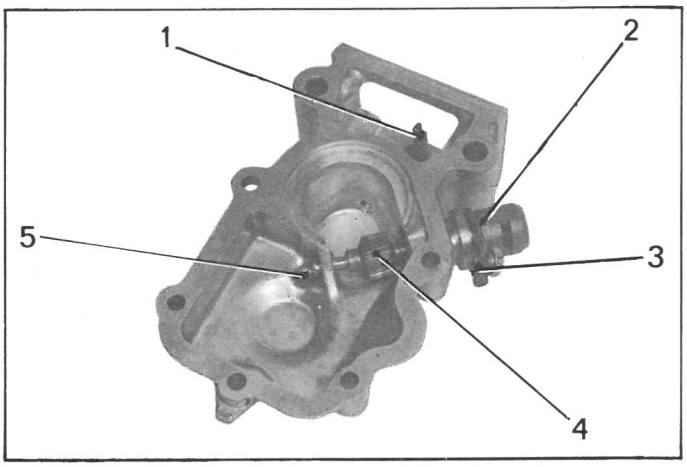

26. Prepare the selector fork control lever :

Grease the control lever ball (TOTAL MULTIS).

NOTE : In case of an overhaul of the control lever, see relevant operation.

27. Prepare the rear cover :

a) *Early type gearbox :*

Position :
- the thrust ring (5),
- the pinion (4) previously oiled.

Fit the speedometer drive socket (2) with its clamp (3) ; tighten the screw (spring washer).

NOTE : The slot for the flexible drive retainer should be parallel to the box centreline and positioned downwards.

For gearboxes equipped with a selector fork guide finger (1) :
- Fit with the flat opposite the speedometer drive socket.

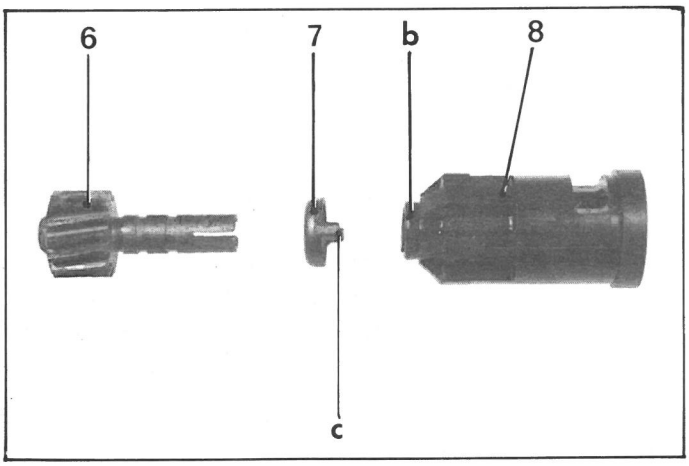

b) *New type gearbox :*

Oil the speedometer pinion (6).
Place the cup (7) on the end of the plastic support (8), positioning the spigots « c » in the corresponding slots « b ».

Fit the pinion on its support.

Fit the assembly in the rear cover.

Tighten the stop screw.

28. Prepare the wheel cylinders :

(See relevant operation).

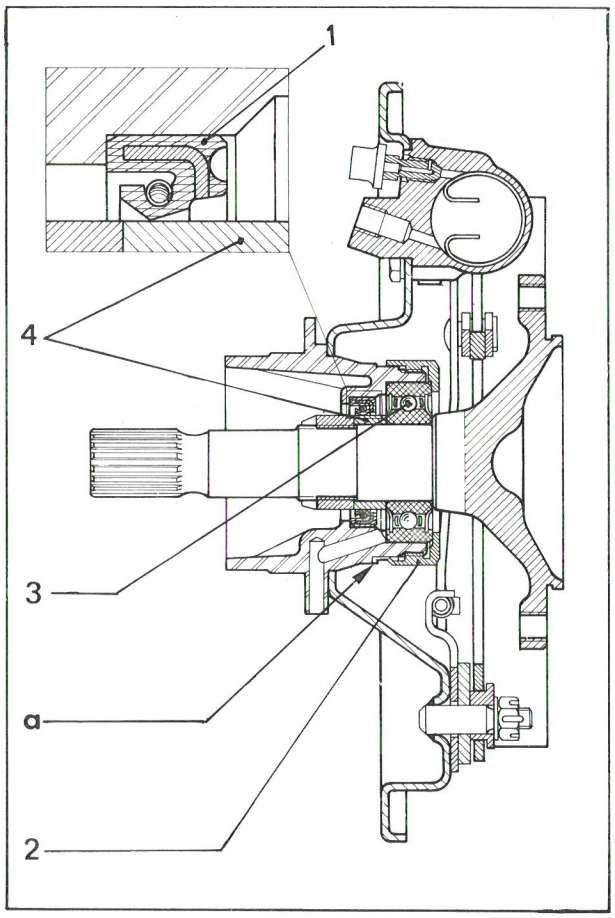

29. Prepare the brake plates :

a) If necessary, fit the adjusting cams.
Tighten the pins so as to obtain a rotation torque of between 10 to 25 mΛN (1 to 2.5 m.kg).
Use mandrel for rivetting MR. 630-62/13 and snap for rivets : MR. 630-62/11.

b) *Vehicles equipped with a gearbox having the gear change lever on the upper cover.*

Fit in position :
- the sealing bush (1) (previously oiled) with the rubber edge inwards,
- the distance piece (4) in the bore of the bush inserting it from the outside,
- the sealing bearing (3),
- the bush-nut (2). Tighten it using a chain spanner or a strap spanner (60 to 75 mΛN, 6 to 7.5 m.kg) and knock over the shoulder flange at point « a »,
- the brake plate on the bearing.

c) *Vehicles equipped with a gearbox having the gear change control lever on the rear cover.*

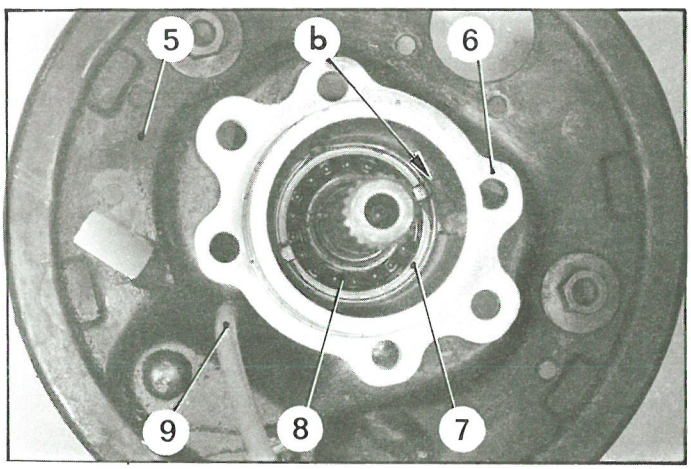

Place in position :
- the brake plate (5) on the bearing (6),
- the oil deflector on the bearing support using a tube of 60 mm inside diameter, 72 mm outside diameter, length 60 mm. Align the oil drain tube with the centreline of the oil return hole boss,
- the sealing bush previously oiled, with its rubber edge inwards,
- the bearing (8) (oiled),
- the bush-nut (7) tightened to between 100 and 140 mΛN (10 to 14 m.kg) (spanner 1926-T) and knock over the metal of the nut in the counter sunk portion of the bearing support at point « b ».

d) Fit the differential shaft in the bearing support :
Offer up the assembly of brake plate and bearing on the differential shaft.

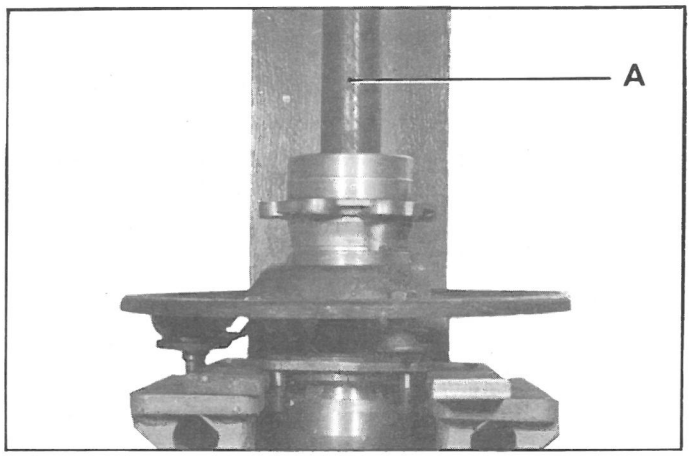

- Fit the differential shaft in the bearing (under a press) using a tube A (inside ϕ 26 mm, outside ϕ 34 mm, length 150 mm).

- Screw and tighten the nut (1) to between 100 and 120 mΛN (10 to 12 m.kg).

- Knock over the metal of the nut with a matting tool into the countersunk portion of the shaft.

- Fit the handbrake cable. Tighten the securing screw for the stop sheath (spring washer).

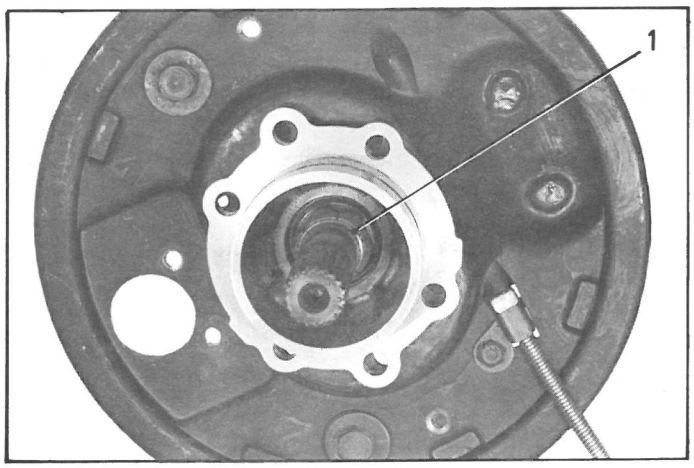

30. Prepare the primary shaft :

NOTES :

1°) *Since April 1966 and up to October 1966,* the primary shafts were fitted with a rear single row ball bearing and a 7 mm distance piece between this bearing and the step-down pinion.

2°) *From October 1966,* the distance piece has been discontinued and the step-down pinion hub has been lengthened by 7 mm.
The step-down pinion has teeth instead of splines.
The conical distance piece, the speedometer screw and the nut have been replaced by a nut forming speedometer screw and locked by knocked over metal. Gearboxes produced earlier can be modified in the same way if the following parts are replaced :
- the primary shaft,
- the step-down pinion,
- the ball bearing,
- the nut forming speedometer screw.

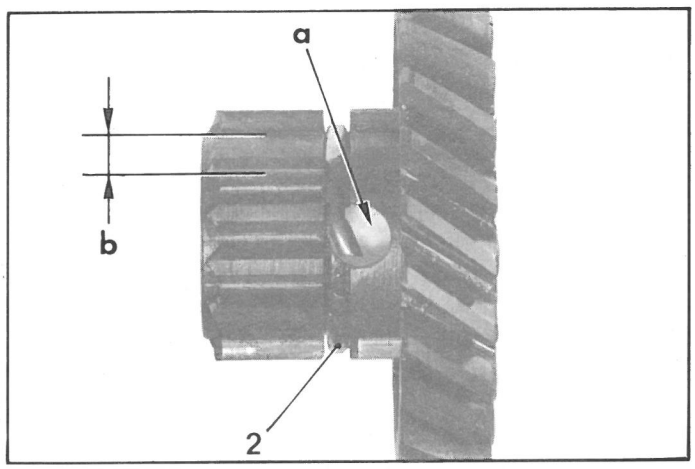

a) Place the synchronizing segment in position (2) on the second gear idler pinion.

NOTE : Position the « tag » of the segment (2) in the hole « a » in the pinion.

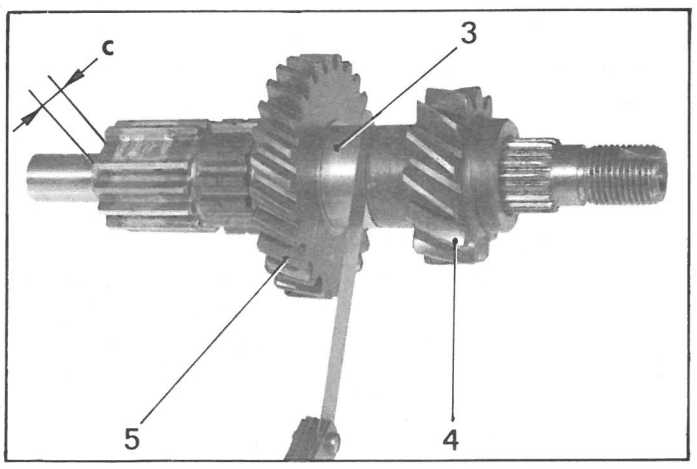

b) Position on the primary shaft, the 2nd gear idler pinion (5) the distance piece (3), the step-down pinion (4).
Hold the step-down pinion (4) against the shoulder of the shaft.
Make sure that the 2nd gear idler turns freely with an end float of between 0.05 and 0.35 mm.
If not, replace the distance piece (3).

c) Place the wide splines « b » on the 2nd gear idler pinion (5) in line with those « c » on the shaft.

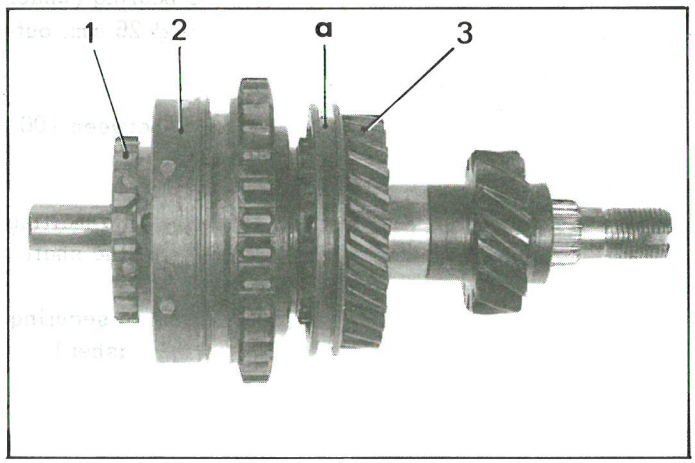

d) Place on the primary :

- the 2nd-3rd gear sliding pinion (1), the collar « a » against the 2nd gear idler pinion (3) with wide splines « d » of the synchronizing cones in line with those on the shaft « b ». Engage the sliding gear (1) on the dogs of the 2nd gear idler pinion.

- 1st gear-reverse gear sliding pinion (2) (teeth facing towards the rear), engaging the dogs in the wide splines « c » of 2nd-3rd gear sliding pinion (1). Push the sliding pinion (2) fully home.

CARE : The sliding pinions must be cleaned with the greatest care to ensure that the cones do not stick : ensure that the latter turn freely.

NOTE : The Replacement Parts Department sell « paired » assemblies of primary shaft and second and third sliding pinion (1).
If either of these two parts is worn, a new assembly must be fitted.

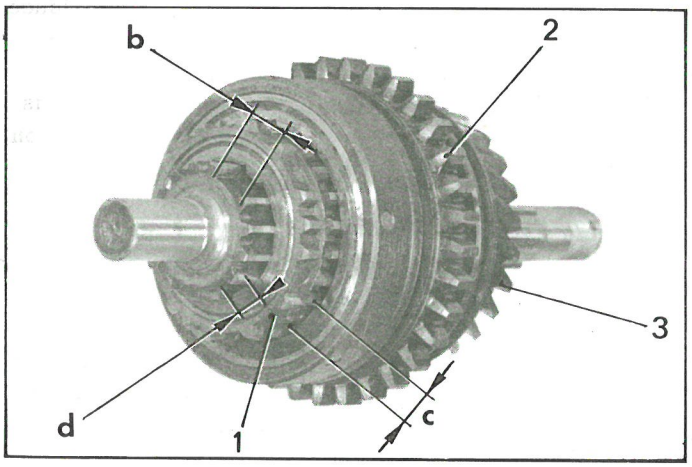

31. Prepare the bevel pinion :

a) *Gearbox with intermediate gear train fitted with fixed thrust washer :*

- Fit bearing (5) on shaft (4) using a press.

NOTE : *From October 1963*, the ball bearing has been modified : width 16 mm instead of 18 mm. The bevel pinion, the fixed thrust washer and the front bush of the intermediate gear train have also been modified.

This coupling may be fitted in early type gearboxes on condition that the fixed washer and front intermediate gear train bush are also fitted.

To avoid scoring the bearing face of the front bush, fit the circlip as follows :

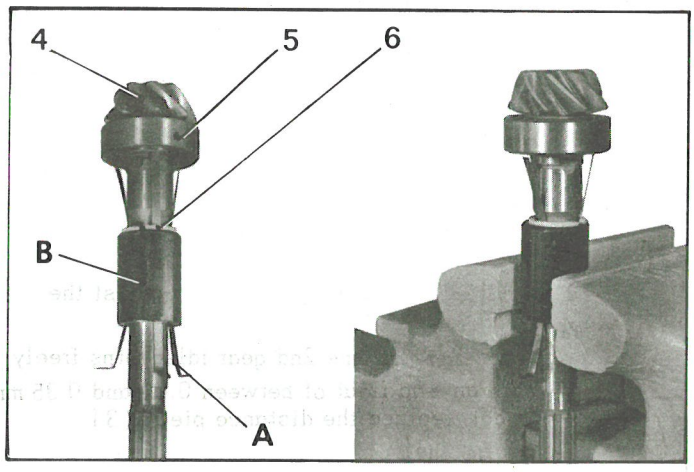

Place on the shaft the locking segment (6) and the three shims A (0.3 mm thick, 5 mm wide, 100 mm long) arranged at 120°. Fit a tube B of inside diameter 26 mm, bearing against the segment. Invert this assembly and the clamp tube in a vice. Tap on the end face of the bevel pinion with a mallet until the locking segment is correctly located in its groove. Remove the shims. To save time, the tool MR. 630-31/34 can also be used for this operation.

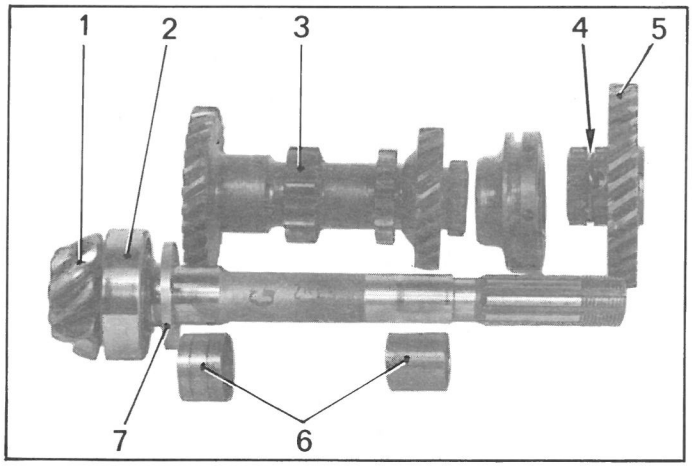

- Grease and place in position the fixed thrust washer (7). Place the flats on the shaft (1) in line with those on the washer. If the latter as a chamfer, fit it with the chamfer towards the bearing (2).
- Fit the synchronizing segment on the step-down gear pinion (5).
- Fit on the shaft (1) :
  - the intermediate gear train (3) with its two bushes (6),
  - the step-down gear pinion (5).
- Hold the step-down gear against the shoulder of the shaft.
- Ensure that the intermediate gear train turns freely.
- The end float should be of from 0.05 to 0.35 mm for the early type coupling (width of bearing = 18 mm) and of from 0.45 to 1 mm for the new type (width of bearing = 16 mm). If not, replace the thrust washer (7).

After this check remove :
- the step-down gear pinion (5),
- the intermediate gear train (3) with its bronze bushes (6).

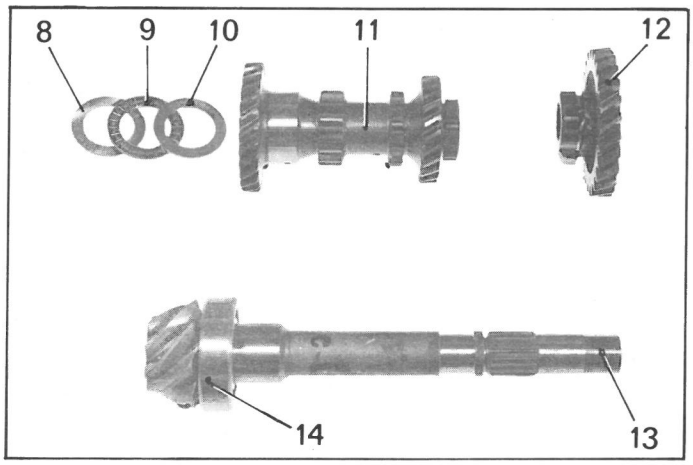

b) *Gearbox with intermediate gear train fitted with needle bearing thrust race :*

Fit the synchronizing segment on the step-down gear pinion (reverse speed reduction gear) (12).
Determine the thickness of the thrust washers for the needle bearing thrust race.
Place on the bevel pinion shaft (13) :
- a thrust washer of any thickness (8),
- a thrust washer of identical thickness to that of the needle bearing thrust race (9), i.e. 2 mm,
- the intermediate gear train (11),
- the reverse speed reduction gear pinion (step-down gear) (12).

Hold the reverse speed reduction gear pinion (step-down gear) (12) against the shoulder of the bevel pinion shaft (13).
Select from the thrust washers sold by our Replacement Parts Department those which pass (at « a ») between the reverse speed gear pinion (step-down pinion) and the end of the intermediate gear train with a *clearance between 0.10 and 0.20 mm.*
Remove the step-down pinion (12), the intermediate gear train (11) and the 2 mm thick thrust washer.
Fit in this order :
- the thrust washer (8) fitted previously (as selected),
- the needle thrust race (9),
- the washer (10) of the predetermined thickness.

Stick these three parts with grease on the bearing retaining the front roller bearing (14) of the bevel pinion.

3697

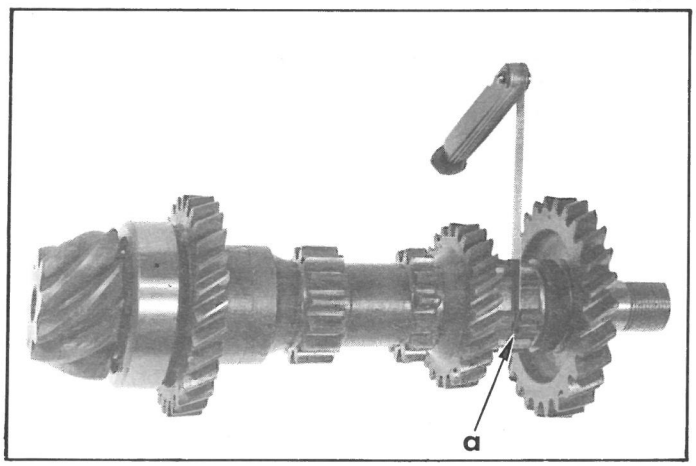

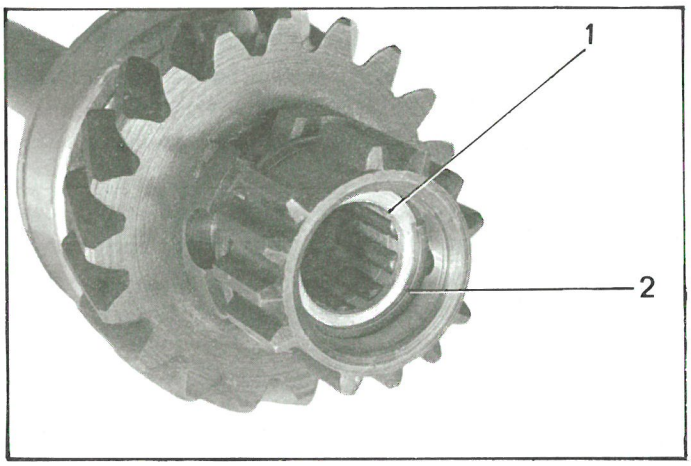

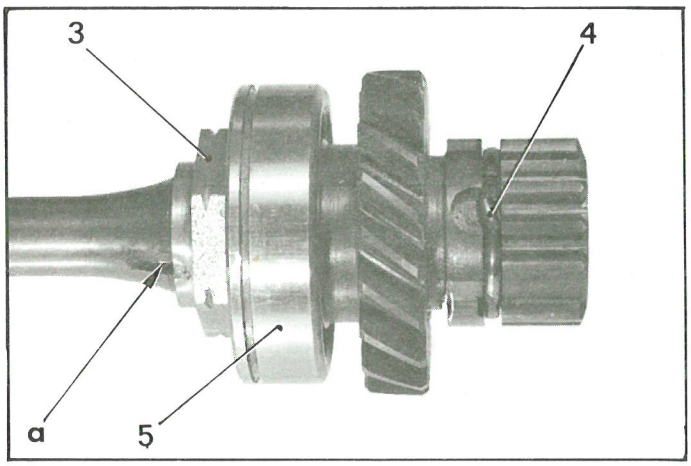

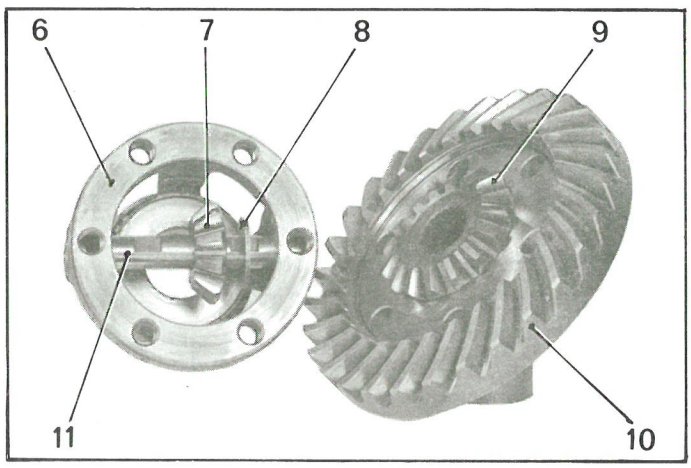

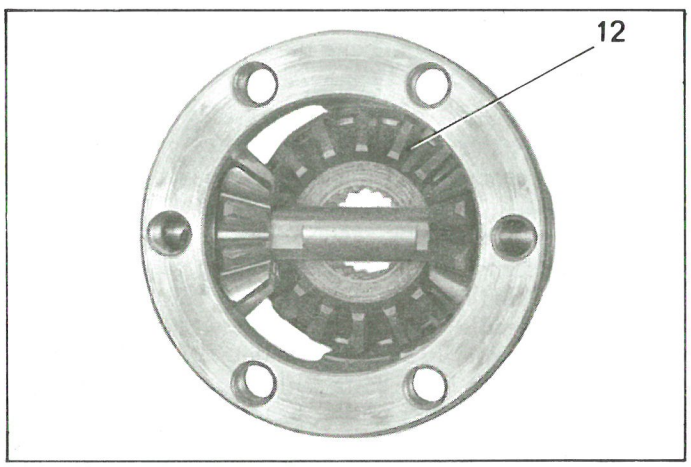

32. Prepare the main shaft :

a) Fit the needle bearing cage :
Place the needle bearing cage (1) (previously greased) in the bore of the shaft.
Fit (if need be) the retaining circlip (2) in the groove in the bore of the shaft.
(See NOTE, paragraph 11, this operation).

b) Fit the synchronizing segment (4).

c) Fit the bearing (5), using a press.
Tighten the nut (3) to between 120 and 140 mΛN (12 to 14 m.kg) *(left-hand thread)* and lock it in position by turning over the metal of the nut into the countersunk portion of the shaft at point « a ».

33. Prepare the differential :

a) Place in the housing (6) a satellite pinion (7) a thrust washer for satellite pinion (8) and the spindle (11).

b) Offer up the crown wheel (10) together with a planet wheel (9). Tighten the screws progressively, at the same time checking the rotation of the planet wheel. There must be no stiffness at any point. There must be a minimum clearance at any point of 0.10 mm, and the tightening torque of the crown wheel securing screws must be between 70 and 80 mΛN (7 to 8 m.kg) (use torque spanner 2471-T).
Select from amongst the washers sold by our Replacement Parts Department those giving those conditions.
Remove the crown wheel and its planet wheel : disengage the satellite pinion and its thrust washer. *Do not unpair these parts.*

c) Carry out the same operation for the other satellite pinion.

d) Remove the crown wheel (10). Disengage each satellite pinion and thrust washer assembly, without mixing the parts.

e) Place the 2nd planet wheel (12) with its thrust washer in the housing. Fit the satellite spindle and each satellite and thrust washer assembly.
Select from the planet wheel thrust washers sold by our Replacement Parts Department one which permits the rotation of the planet wheel without stiffness at any point. The minimum clearance at any point should be 0.10 mm.

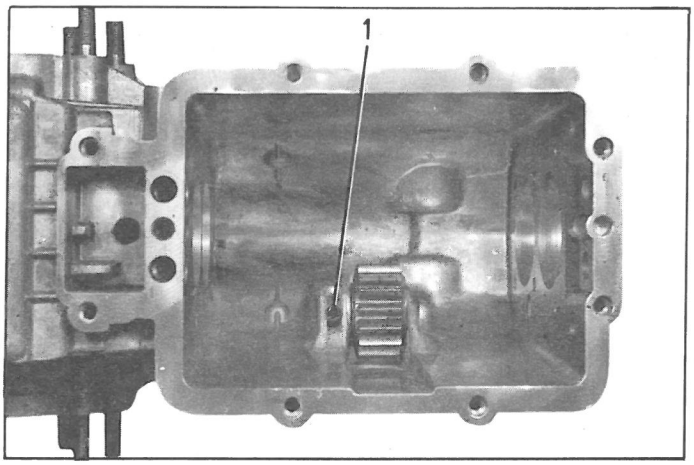

f) Finally fit the planet wheel and its thrust washer, the satellite pinions and their thrust washers, the spindle, the 2nd planet wheel and the crown wheel, after first oiling their bearing surfaces.
Tighten the screws to between 70 and 80 mΛN (7 to 8 m.kg).
(There are no lockwashers under the heads of the screws).

g) Fit the tapered bearing using a press and a tube (inside ϕ 36 mm, outside ϕ 45 mm, length 40 mm).

34. Prepare the reverse speed pinion (step-down gear) :

Check the condition of the bush.

NOTE : If the bush is worn, the complete pinion assembly should be renewed.

FITTING.

35. Place the gearbox housing on a stand (MR. 630-43/3).

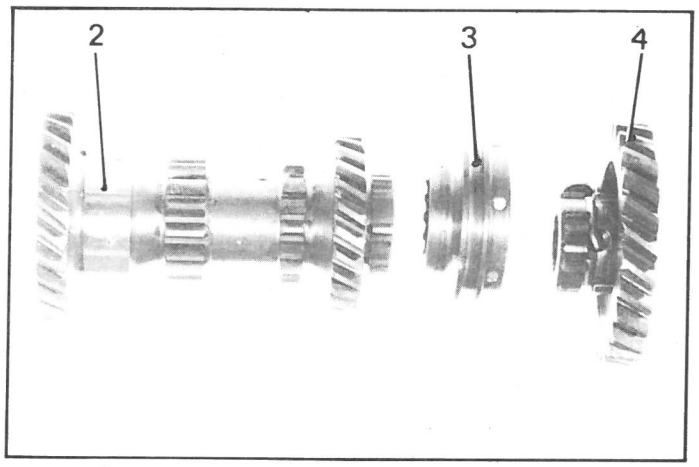

36. Fit the reverse speed pinion :

Oil the spindle.
Engage it in the boss in the casing, place the hole for the locking pin towards the front, approximately vertical.
Offer up the reverse speed pinion with the entry side of the teeth facing the front of the gearbox.
Insert the spindle and position it correctly : insert the Mecanindus pin (1) in contact with the bottom of the front support.

37. Fit the main shaft *(Only in cases where diameter of toothing is greater than that of bearing) :*

a) Prepare the intermediate gear train fitted with its two bronze bushes or its two needle bearing cages or the front needle bearing cage *(as applicable)*, (the intermediate gear train bores and bushes previously oiled).
Fit the overdrive sliding pinion (3) on the intermediate gear train (2).
Fit the step-down gear pinion (4) in the sliding pinion dogs.
Place the assembly in the bottom of the housing.

b) Offer up the main shaft from inside the housing.
Fit it in position by tapping on the end with a bronze drift or a tube A (inside ϕ 33 mm, outside ϕ 40 mm, length 250 mm).

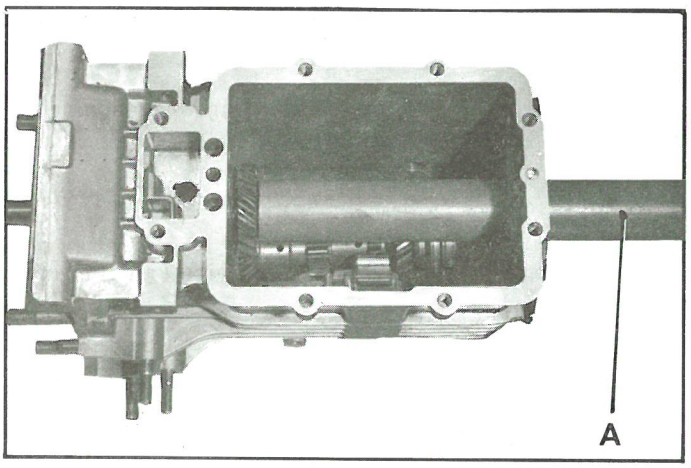

c) Fit the bearing circlip.
Fit the securing clamp and tighten the screws to 25 mΛN (2.5 m.kg).

38. Fit the bevel pinion :

a) Place in position the half needle bearing sleeves *(as applicable)*, securing them with grease to the bevel pinion.

NOTE :

Check as applicable :
- that the needle thrust bearing with flat is correctly positioned on the bevel pinion,
- or that the needle thrust bearing and its two thrust washers are securely stuck on the front bearing circlip.

3707

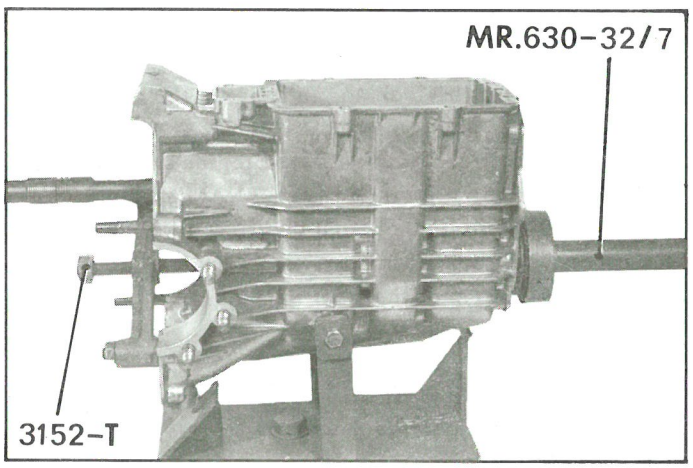

b) Fit the bevel pinion in the intermediate gear train and in the splines of the step-down gear.

Insert the front bearing into its bore.

Complete the fitting of the pinion by means of the thrust screw 3152-T and leave this in position.

c) Fit a conic distance adjusting washer of any thickness on the rear end of the pinion.
Push it against the reverse speed pinion *(gearbox with the gear change lever on the cover)*.

d) Fit the rear bearing, positioning it with the mandrel MR. 630-32/7.

3720

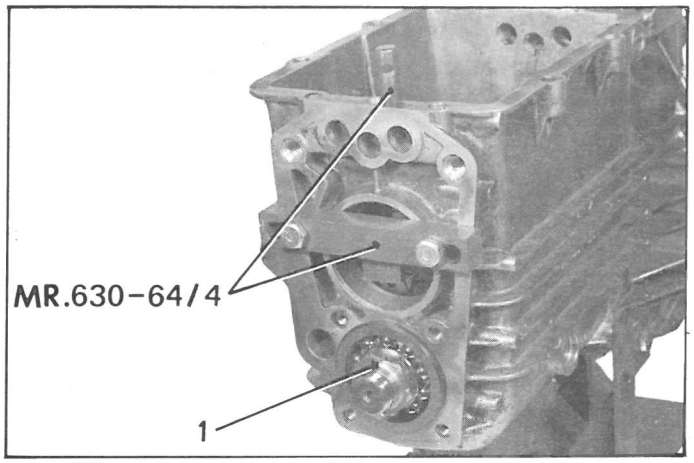

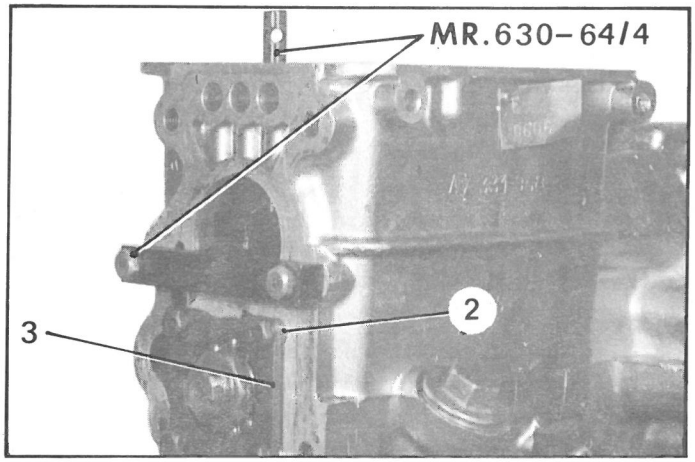

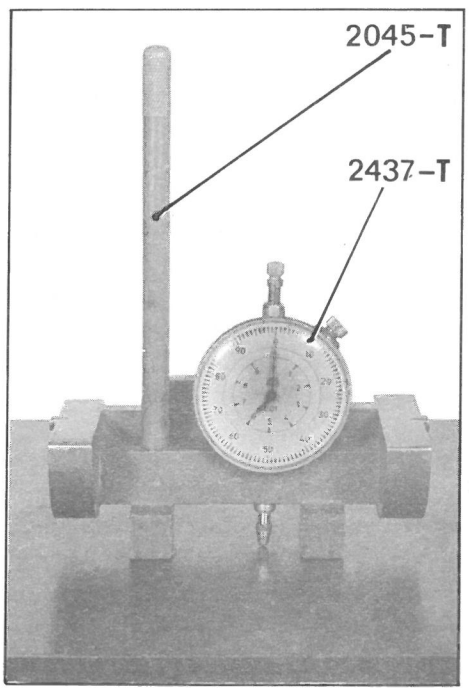

e) Support the step-down gear with apparatus MR. 630-64/4.

Tighten the nut (1) to between 70 and 80 mΛN (7 to 8 m.kg).

Remove the thrust screw 3152-T and the tool MR. 630-64/4.

f) Fit the flange (3) with its four distance pieces (2). *(Gearbox with gear change lever on the rear cover).*

g) Fit the rear cover, securing it with four screws only . *(Gearbox with gear change lever on the upper cover).*

39. Adjust the conic distance of the bevel pinion :

NOTE : This adjustment is of the utmost importance. Giving the teeth the correct setting will ensure silence and long service from the crown wheel and pinion. The setting dimension is given in millimetres and hundredths of a millimetre and is etched on the ground end of the bevel pinion. The dimension represents the distance which must exist, when the adjustment is completed, between the centreline of the differential shaft and the ground end of the bevel pinion.

This will vary with each crown wheel and pinion.

The adjustment of the conic distance should be made by using the adjusting fixture 2045-T together with a dial gauge 2437-T.

This fixture is constructed so that the distance between the centreline of the ground contact surfaces and the contact points is 48 mm.

IMPORTANT NOTE :
The measurements should not be taken from the joint facing, since the machining tolerance for this face is measured in several tenths millimetres as compared with the centre of the bores of the differential bearings.

a) Place the adjustment fixture on a surface plate bringing the figure zero on the movable dial in line with the large pointer.
Note the position of the pointers on the dial gauge.

Example : totalizing pointer on figure (6), large pointer on zero.

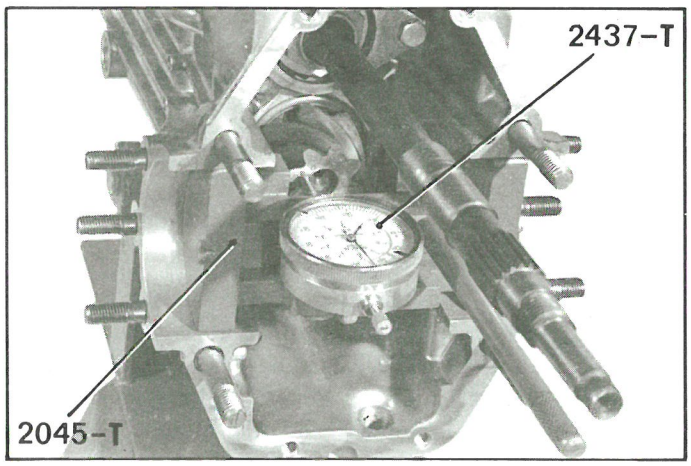

b) *Gearboxes with the gear change lever on the rear cover :*

Measure the actual distance of the bevel pinion :

1°) Put the adjusting fixture in place on the differential ; pivot the adjusting fixture by means of the knurled handle, until the large pointer of the dial gauge changes its direction of rotation : note the readings given by the dial gauge pointers.

Example : totalizing pointer between 5 and 6, large pointer on 49,

2°) Bring the pointers back to the position in which they were in paragraph « a » by pulling on the dial gauge stem.

3°) Slowly release the dial gauge stems counting the number of turns and fractions of a turn made by the large pointer until the point again contacts the ground face of the bevel pinion.
Check to make sure that the dial gauge pointers have returned to exactly the same position as in b) 1°).

Example : the large pointer has rotated 0.51 turns, that is to say that the dial gauge point has travelled 0.51 mm from the position it occupied when the adjusting fixture 2045-T was placed on the surface plate (see paragraph a). Therefore, the actual conic distance setting :
48 mm + 0.51 mm = 48.51 mm.
The dimension etched on the ground end of the bevel pinion being for example 49.50, it is necessary to move the bevel pinion from the differential centreline 49.50 - 48.51 = 0.99 mm.

The thickness of the adjustment shims to be placed between bearing flange and casing in the above example, would be 1 mm, because the shims sold by our Replacement Parts Department only allow for adjustments to be made to within 0.05 mm.

c) *Gearbox with gear change lever on the upper cover*

Proceed as indicated above, taking into account the thickness of the adjusting washer (fitted at paragraph 38, sub-paragraph c) and choose an adjusting washer so as to make the conic distance previously measured equal to that etched on the bevel pinion.

3720

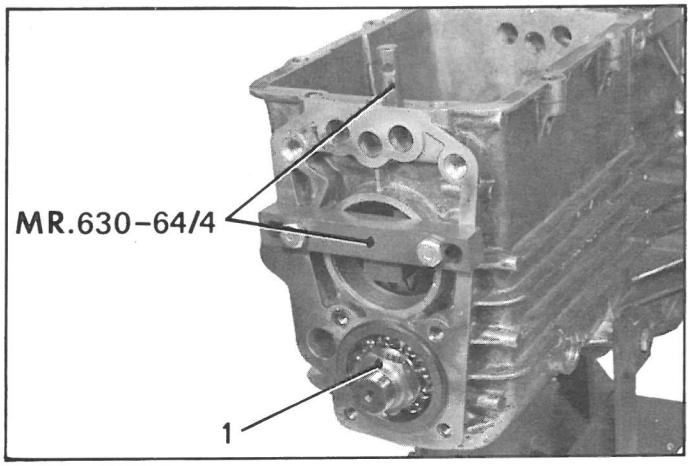

d) Remove (as applicable) the flange securing the bearing and the four distance pieces or the rear cover.

- Place in position holding fixture MR. 630-64/4.
- Remove the nut from the bevel pinion.
- Remove the rear bearing, using two levers.
  CARE : Do not damage face of joint.
- Remove fixture MR. 630-64/4.

Place in position (as applicable) the adjusting shims previously determined, between the thrust flange of the bearing and the housing or between step-down gear pinion and the bearing.

3707

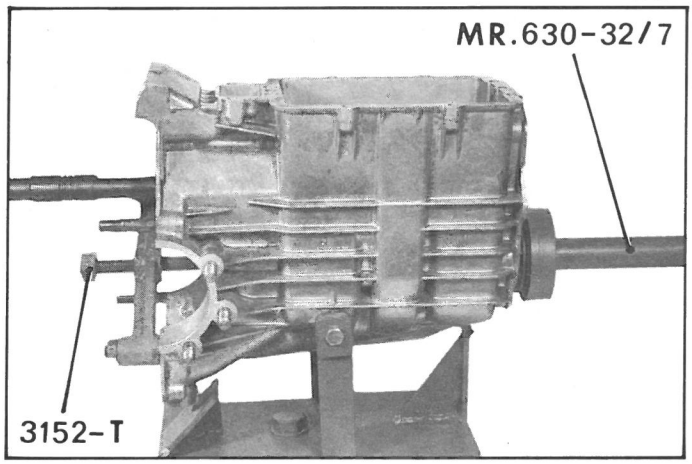

e) Fit the rear bearing, using mandrel MR. 630-32/7, and supporting the bevel pinion by means of the thrust screw 3152-T.

- Place in position fixture MR. 630-64/4 and tighten the nut to between 70 and 85 mΛN (7 to 8.5 m.kg).
- Remove the thrust screw 3152-T and the fixture MR. 630-64/4.

f) Fit the flange (2) securing the bearing with its four distance pieces (3) and tighten the screws to 25 mΛN (2.5 m.kg) or fit the rear cover securing it with four screws only.

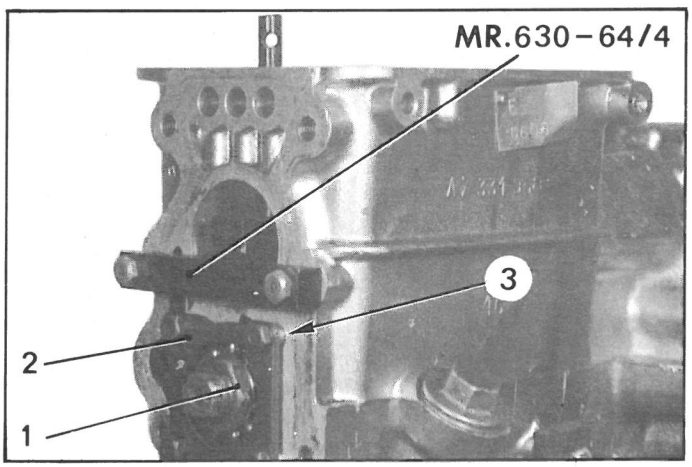

g) Check again the conic distance as indicated above.

h) Remove (as applicable) the rear cover.
Tap over the metal of the nut (1) to lock it.
(Perpendicular blows to the shaft are prohibited in order to avoid damage to the bearing).

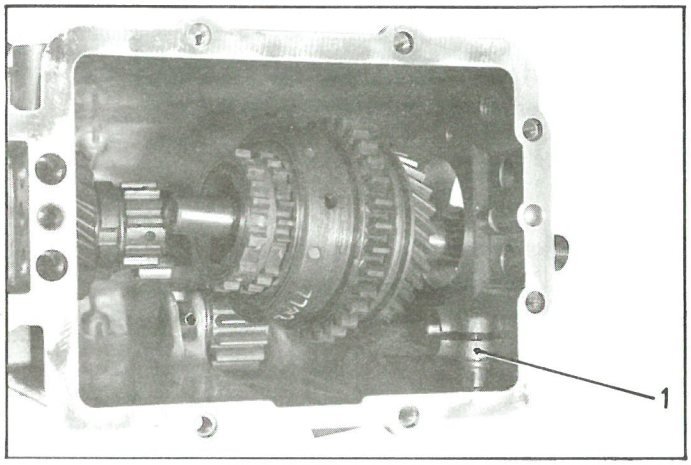

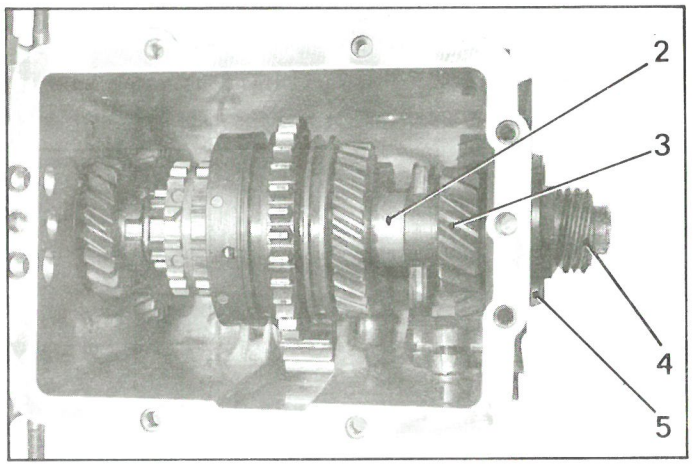

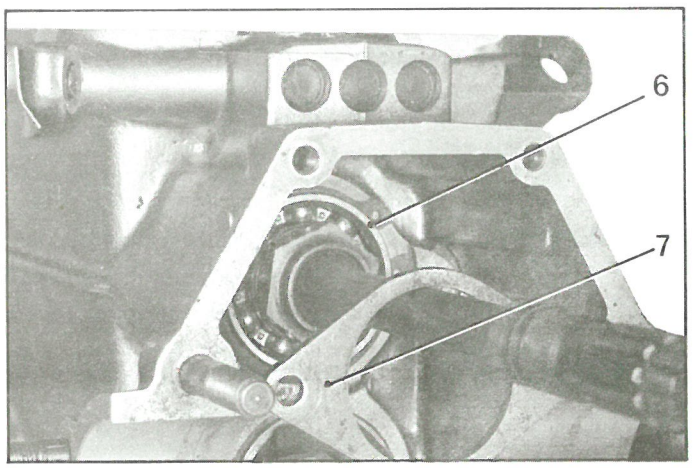

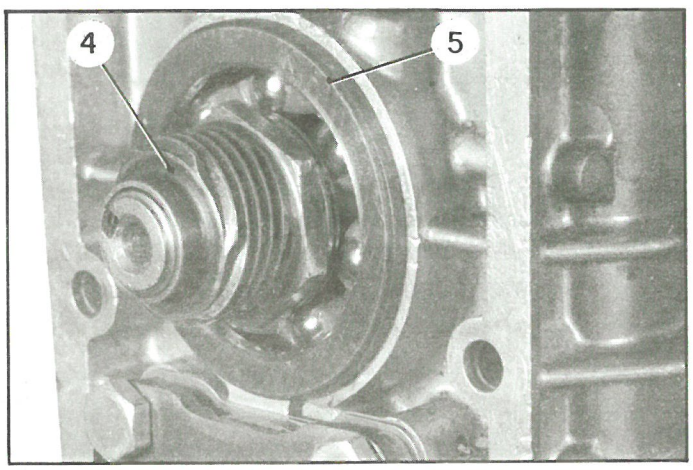

40. Fit the main shaft and the primary shaft :

a) *The toothing of the main shaft has a larger diameter than that of the bearing :*

- The main shaft having been fitted at para. 38, position the primary shaft.

- Place the fork (1) of the overdrive in the groove of the sliding pinion, with the head of fixing screw positioned towards the left hand-side of the gearbox.

  Ensure that the sliding pinion is engaged on the step-down pinion.

- Offer up the assembly of primary shaft, sliding pinions and second gear idler pinion in the gearbox casing. Engage the end of the shaft in the needle bearing cage of the main shaft pinion and the sliding pinion on the 3rd gear dogs.

- Position the distance piece (2) and the step-down gear pinion (3).

b) *The toothing of the main shaft has a smaller diameter than that of the bearing :*

- Place the overdrive fork (1) in the groove of the sliding pinion, with the head of the securing screw positioned towards the left of the gearbox.

- Position the assembly shaft and pinion in the gearbox casing.

- Fit the main shaft making sure that the dogs on the main shaft mesh with the second third gear sliding pinion (use a tube placed against the outer race of the bearing (6) (inside ϕ of tube = 46 mm, outside ϕ = 52 mm, length = 300 mm).

- Fit and tighten the securing flange (7) to 25 mN (2.5 m.kg).

c) Fit the rear bearing (5) (mandrel MR. 630-32/7).

d) Place the speedometer screw (4) forming a nut or flexible washer, the distance piece and the speedometer screw (as applicable).

e) Engage two speeds, tighten the nut to between 70 and 90 mN (7 to 9 m.kg).

Lock the nut by turning over the metal or fitting split pin.

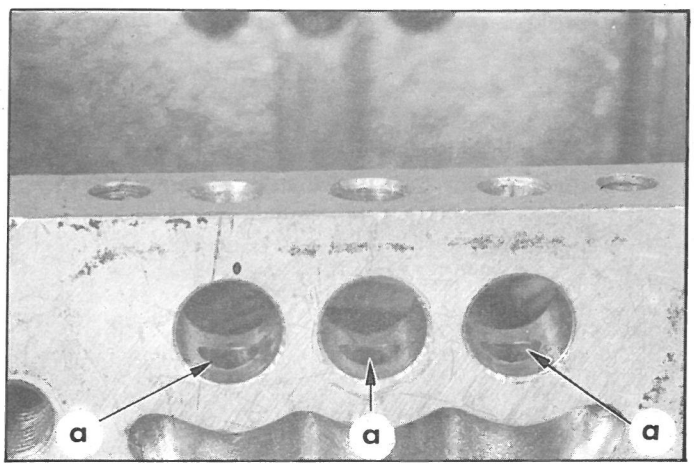

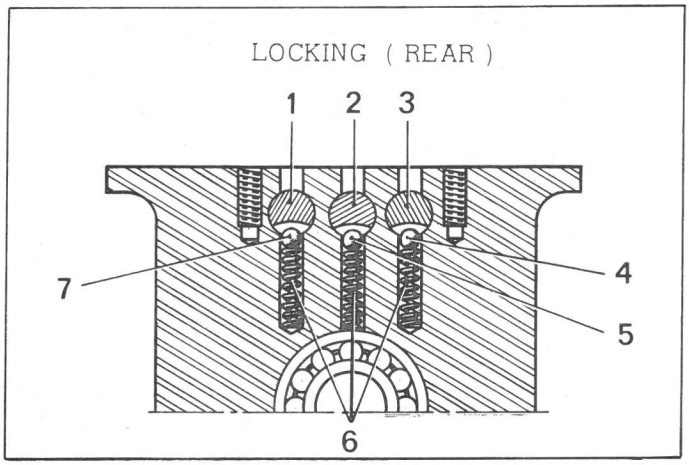

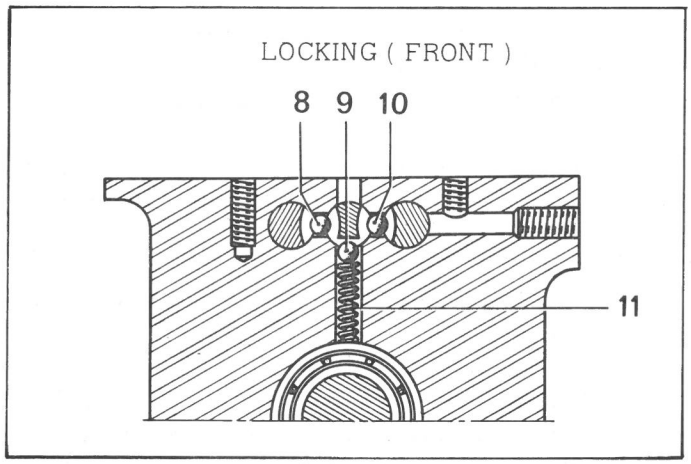

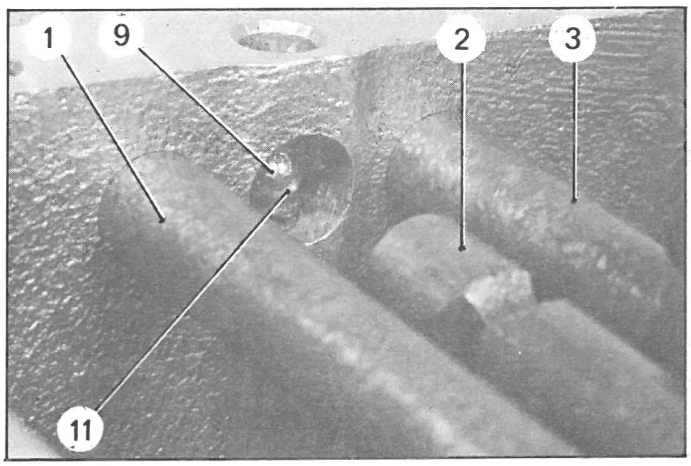

41. Fit the selector fork shafts :

A - Gearbox with gear change lever on the rear cover :

- Place the 2nd and 3rd gear selector forks and those of 1st and reverse gear in the grooves of their sliding pinion (head of the fixing screws positioned towards the left).

  Fit the springs (6) in their housings « a ».

  Position the 4th gear selector fork shaft (1) previously oiled and fitted with its locking segment ; grease and fit the locking ball (7) on the spring.

  Block the shaft passageway on the gearbox side, with one finger.

  Compress the ball and spring assembly using a rod (5 mm ϕ).

  Fit the shaft after having turned it 1/4 of a turn to prevent it from locking and complete fitting in its selector fork until it reaches neutral position. Rotate 1/4 of a turn so that it reverts to its normal position.

- Fit the shaft of 1st - reverse gear (3) :
  Grease and fit the ball (4) on its spring and proceed as above.

- Fit 2nd - 3rd gear shaft (2) :

  Oil and position the shaft (rotating it 1/2 of a turn).
  Grease and fit the ball (5) on its spring.

  Block the shaft passageway on the gearbox side.

  Compress the ball and spring assembly using a rod (5 mm ϕ).

  Fit the shaft.

  Insert the shaft in selector fork.

  Rotate the shaft to bring it to normal position (do not engage the shaft to fullest extent).

  Position the spring (11).

  Fit the safety balls (8) and (10) then ball (9) on the spring (11) (the ball having previously been greased).

  Compress the ball (9) and spring (11) assembly and complete the engagement of 2nd - 3rd gear fork selector shaft up to neutral position.

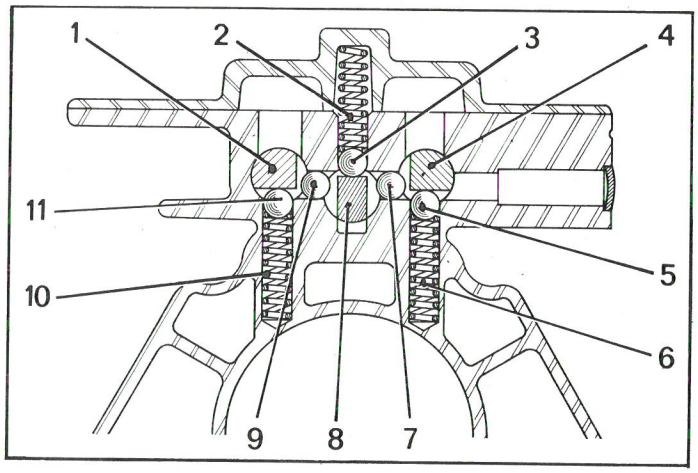

LOCKING

B - *Gearbox with gear change lever on the upper cover :*

- Place the selector forks of 2nd - 3rd gear and 1st - reverse gear, into the grooves of their sliding pinion (head of fixing screws positioned towards the left).

- Position the springs (10) and (6) for the locking balls of overdrive and 1st - reverse gear shafts.

- Oil the three shafts.

- Fit the overdrive shaft (1) in gear casing (the end with the locking splines towards the front), then in the fork, but without inserting it in the front housing of the casing.

- Position the balls (7) and (9) previously greased.

Fit the 2nd - 3rd gear shaft (8) in the casing, then in the selector fork, the end with the splines towards the front.

Introduce the shaft into its front housing, arranging as indicated in the diagram and photograph herewith.

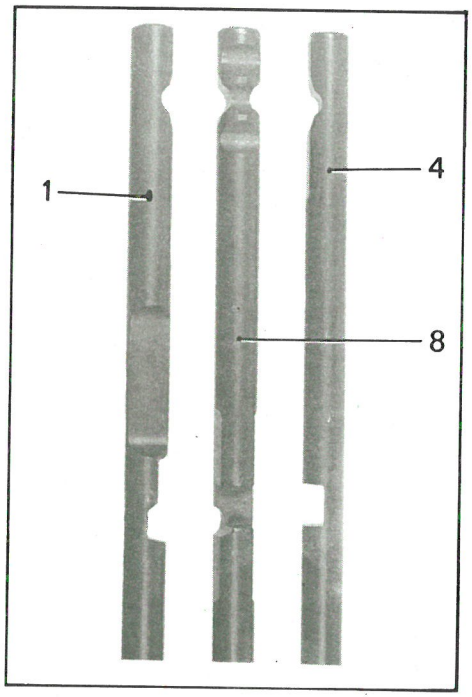

Position the ball (3) previously greased.

Move the shaft in « neutral » position.

- Fit the 1st and reverse gear shaft (4) into the casing, then into its selector fork, with splined end toward the front.

- Position the ball (5), previously greased, on the spring (6).

Compress the assembly of ball and spring using a rod 5 mm in ϕ, and complete the engagement of 1st and reverse gear shaft in its front housing positioning the splines as indicated on the diagram and photograph herewith.

- Position the greased ball (11) on the spring (10). Compress the assembly of ball and spring using a rod 5 mm in ϕ and complete the engagement of the overdrive shaft (1).

- Set the overdrive and 1st - reverse gear overdrive shafts in « neutral » position.

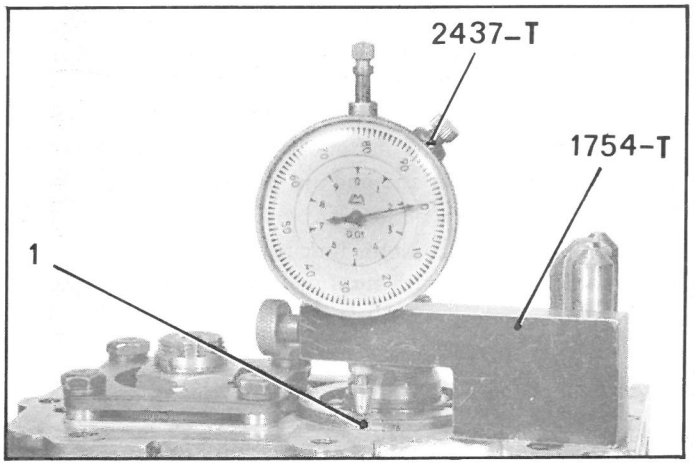

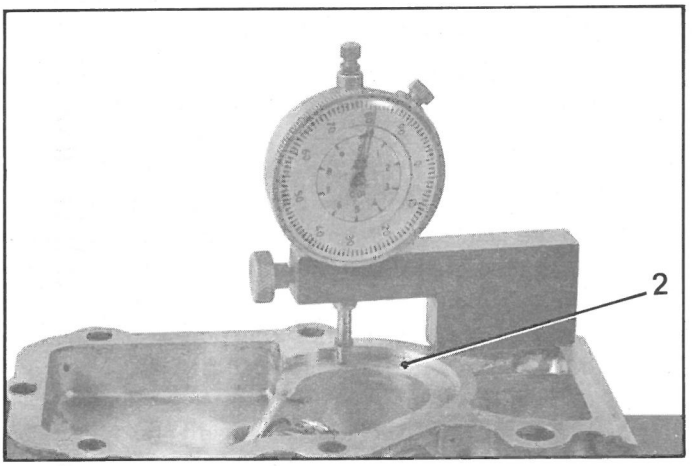

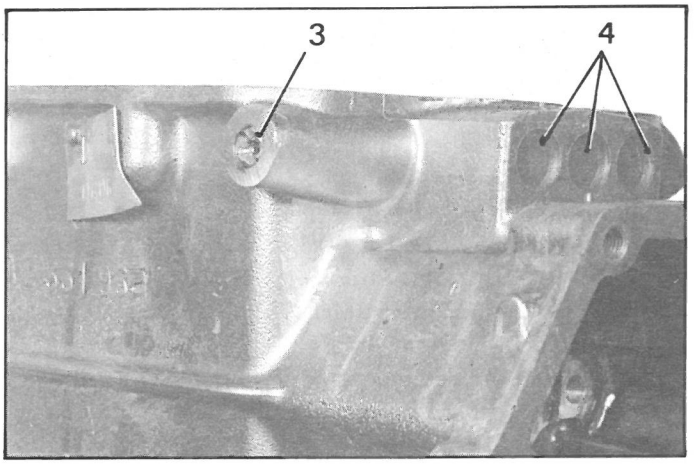

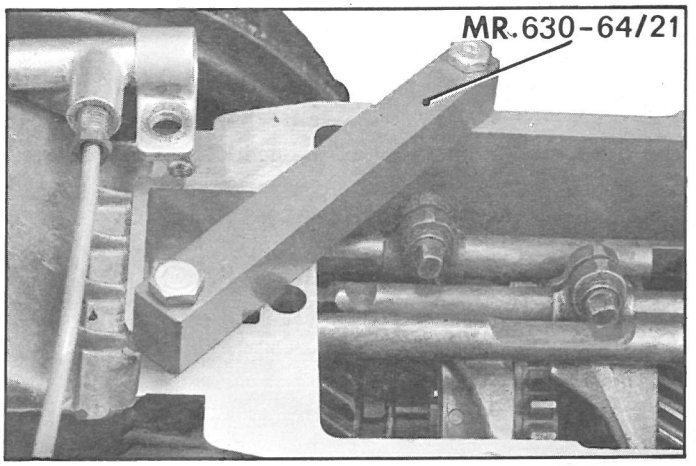

42. Fit the rear cover :

a) *Gearbox with the gear change lever on the rear cover :*

a) Ensure that the flange of the bearing of the primary shaft is firmly in contact against the gearbox casing.

b) Measure the projection of the bearing (1) (using straight edge 1754-T equipped with dial gauge 2437-T).

c) Measure the depth of the bearing recess in the cover (2). The difference between these two measurements, increased by 0.05 mm indicates the thickness of the shims to be placed between the upper bearing and the cover.

Coat the joint of the cover with CURTYLON.

Hold the shims in place with grease.

Fit the cover and tighten the screws.

d) Fit the plug (3) or the screw on the front right-hand side of the gearbox.

Fit blanks (4) coated with CURTYLON if the casing has been renewed.

NOTE : These blanks do not exist on pressure cast casings.

b) *Gearbox with gear change lever on the upper cover :*
Ensure that the casings and cover joint surfaces show no traces of bruising or scratches. Coat them with CURTYLON Masti-joint. Tighten the screws to between 15 and 20 mΛN (1.5 to 2 m.kg).

43. Adjust the selector forks :

a) Adjust the selector fork of 2nd - 3rd gear :
- Set the selector fork spindle in « neutral » position.

NOTE : In the case of a gearbox with the gear change lever on the upper cover the operation is more easily carried out by using clamp MR. 630-64/21 which holds 2nd - 3rd gear shaft locking ball and spring in position.

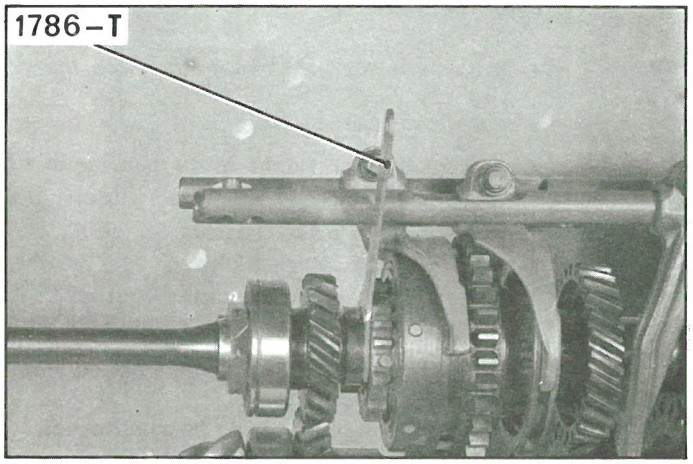

- Set the adjusting shim 1786-T, 1.8 mm thick on the synchronizing segment of the driving shaft.
- Using the selector fork, move the 2nd and 3rd gear sliding pinion into contact with the adjusting shim in order to obtain a play of 1.8 mm, between the end of the 2nd and 3rd gear sliding pinion and the main shaft dogs.
- Tighten the selector fork fixing screw. (For screws with flats use spanner 1677-T).
- Disengage the adjusting shim.

b) Adjust the selector fork 1st - reverse gears :

IMPORTANT : Before starting this adjustment, it is essential that the selector fork of 2nd and 3rd gear is correctly adjusted.
Ensure that the selector fork shafts is in « neutral ».
Position 1st gear - reverse gear sliding pinion (2) bringing it, by means of the selector fork, to the centre of its travel on the 2nd - 3rd gear sliding pinion (1), which brings the rear face of the 1st - reverse gear sliding pinion « a » with the rear end « b » of the ground portion of the 2nd and 3rd gear sliding pinion.
Tighten the selector fork fixing screw.
(For screws with flats use spanner 1677-T).

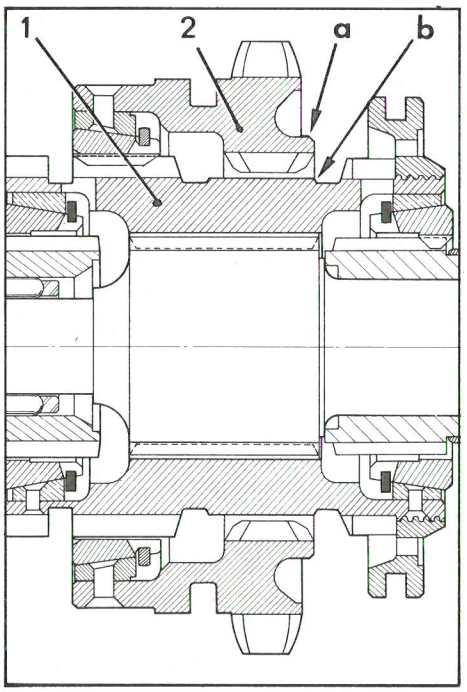

c) Adjust the 4th gear (overdrive) selector fork :

- Ensure that the selector fork spindle in the « neutral » position.
- Place the adjusting shim on slow running ring of idle reduction gear pinion :
- Use the adjusting shim 1785-T, 1.50 mm thick for the following vehicles :
  - *AZ up to February 1970,*
  - *AZU up to January 1972,*
  - *DYANE (AYA) from August 1967 to March 1968.*
- Use the adjusting shim 3153-T, 2.70 mm thick for other vehicles.
- Using the selector fork, bring the sliding pinion of 4th gear in contact with the adjusting shim so as to obtain a play (of the amount determined above) between the end of the 4th gear sliding pinion and the idle reduction gear pinion dogs.
- Tighten the selector fork fixing screw.
- Disengage the adjusting shim.

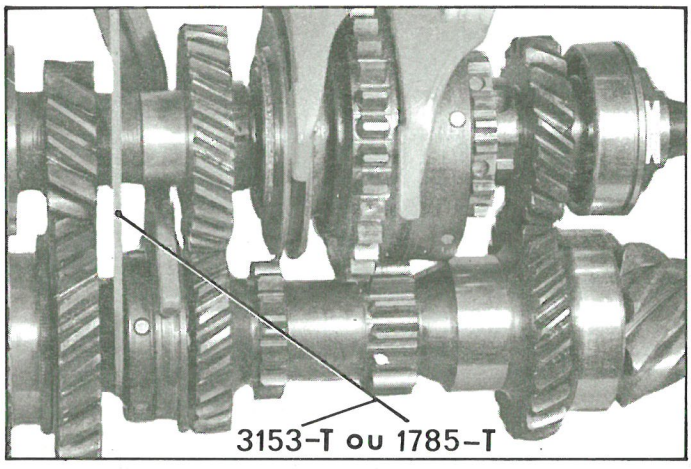

d) Check the operation of the gears successively of the gears.
Remove clamp MR. 630-64/21.

e) Fit the upper cover.
Pay attention to 2nd - 3rd gear change locking spring (gearbox with gear change lever on the upper cover).

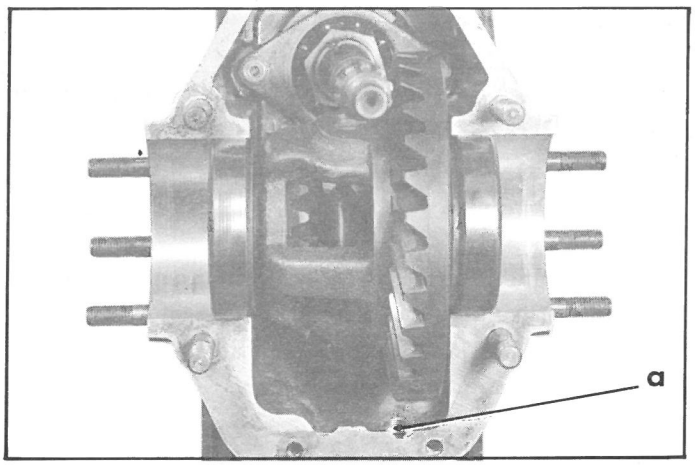

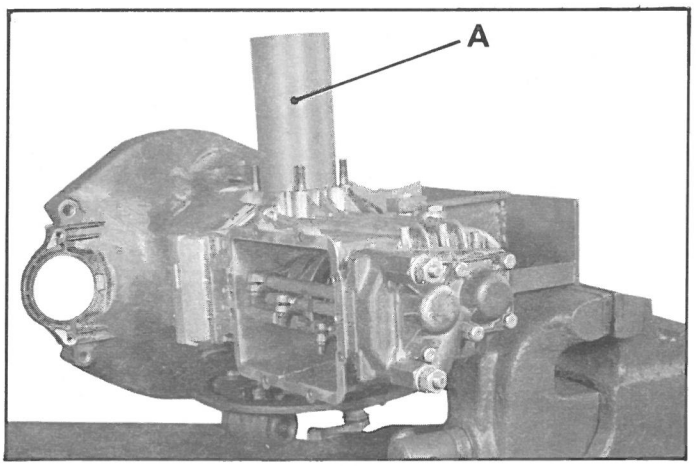

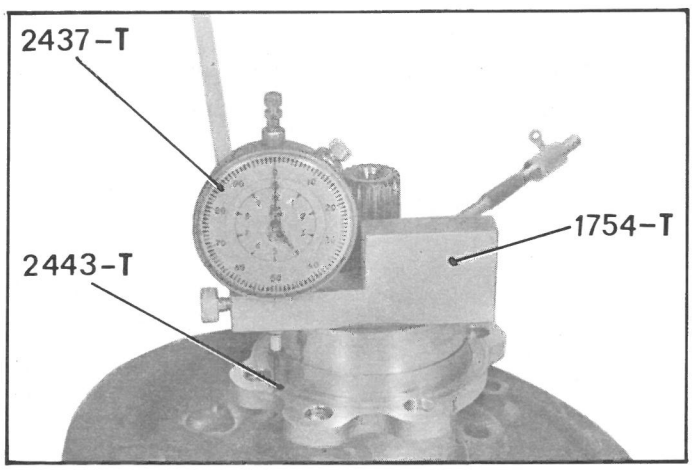

44. Fit the differential :

- Oil the bearings. Put the outer races of the bearings on the rollers.

Position the differential assembly in the half of housing.

NOTE : The crown wheel passes via the centre line of the drain plug « a ».

- Fit the clutch housing, and when tightening, make sure that the bearing faces of the differential shaft hubs on the clutch housing and gearbox casing are correctly aligned

NOTE : If neither the clutch housing, the crown wheel and pinion, the roller bearings nor the bearing housings have been replaced, there is no need to adjust the bearing clearance, provided that the same adjustment washers found when dismantling are used in exactly the same positions.

Fit the left-hand hub assembly inserting two gaskets between the hub housing and the casing.

Tighten the nuts to between 38 and 42 mΛN (3.8 to 4.2 m.kg).

45. Adjust the bearing clearance :

a) Clamp the gearbox on its bracket in a vice, as shown opposite.

b) Make sure that the differential is properly positioned against the left-hand hub and that the outer races are properly located on the rollers by lightly tapping on the outer race of the right-hand bearing with a tube «A» (outside ϕ 71.5 mm, inside ϕ 58 mm, 150 mm long).

c) Fit the straight edge 1754-T together with dial gauge 2437-T (with extension 2443-T) on the hub shoulder of the bearing as shown opposite, with dial gauge point in contact with bearing.

Bring the zero mark on the movable dial of the gauge opposite the large hand and note the position of the totalizing needle.

Example : Totalizing needle between 7 and 8, large needle on zero.

Take this measurement at several points and take the meansurement. The difference between the measurements should not exceed 0.05 mm.

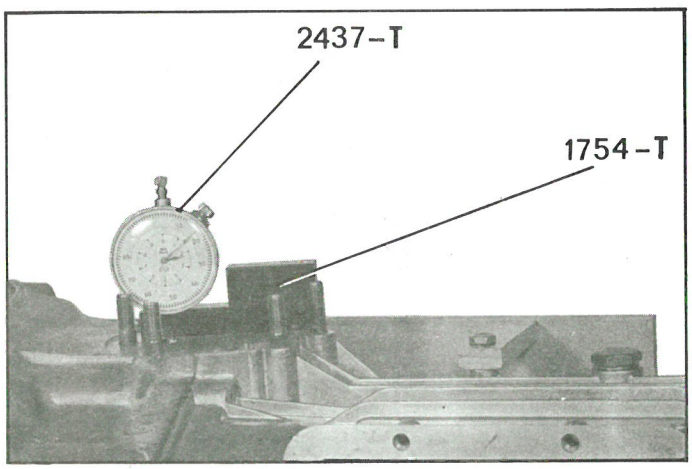

d) Without disturbing the dial gauge, place a straight edge 1754-T on the hub bearing face of the casing the point of dial gauge resting on the outer race of the bearing. (*Make sure that the point of the extension of the dial gauge does not rest on the inscription engraved on the bearing, as this would give a false reading*).

Note the position taken by the dial gauge needle and make sure that this remains constant (within about 0.02 mm) when measurements are taken at three equidistant points of about 120°.

If the reading is the same the bearings of the differential are not seated properly on the left-hand hub, and their correct positioning must be re-checked as indicated at b) above. Take the measurement again.

Example : totalizing hand between 4 and 6, large hand at 54.

e) Bring the dial gauge hands back to the position they occupied at c) by pulling on the dial gauge spindle.

Slowly release this spindle and count the number of complete turns and partial turns made by the large hand, until the point of the dial gauge is again on the outer race of the bearing.

Check that the dial gauge hands have returned to the same position they occupied in «d»).

Example : the large hand has made 1.46 turns.

Select from among the adjusting shims sold by our Replacement Parts Department those which give this thickness.

Check this thickness.

Put these shims aside for subsequent fitting.

46. Adjust the clearance between the teeth :

a) Put the gearbox on its bracket in a vertical position.

Remove :
- the left-hand bearing,
- the two paper gaskets,
- the clutch housing.

b) Secure the differential using the two clamps MR. 630-64/13.

Fit a paper gasket (without shim) on the left-hand hub.

Fit the left-hand hub (2) and secure it.

Place on the right-hand side :
- all the adjusting shims (determined in para. 45) against the outer race of the right-hand bearing,
- a paper gasket,
- the right-hand hub (1), and secure by two nuts.

Ensure that the differential turns without any hard spots.

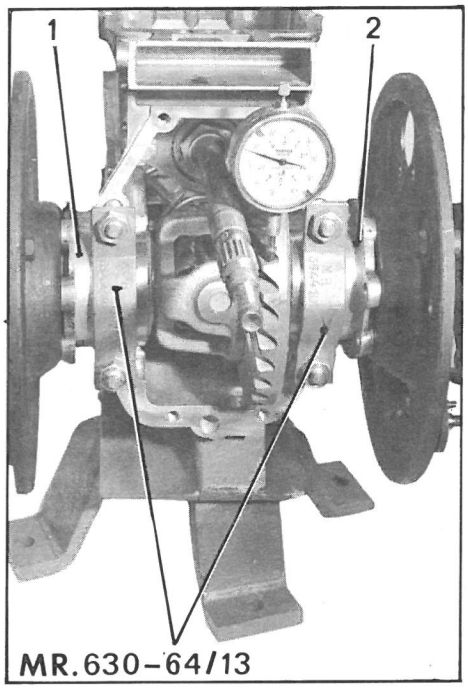

c) Fit the dial gauge 2437-T, in position on the upper left-hand securing stud of the clutch housing, using only the adjustable component of the dial gauge 2041-T.

Adjust the position of the dial gauge so that its point rests perpendicularly on the flank of one tooth on the periphery of the crown wheel.

The figure for the clearance between the teeth should be :
0.14 and 0.18 mm *(gearbox with the control lever on the upper cover)*
0.13 and 0.23 mm *(gearbox with the control lever on the rear cover).*

d) Measure the clearance between the teeth on four teeth at an angular distance of 90° approximately (keep the bevel pinion stationary, holding it by hand) and take the average of the four measurements.
The distance between two measurements must not exceed 0.1 mm.
If it does the crown wheel is running out and must be replaced or there is a foreign body between the crown and the differential housing.
Example : movement measured : 0.77 mm.

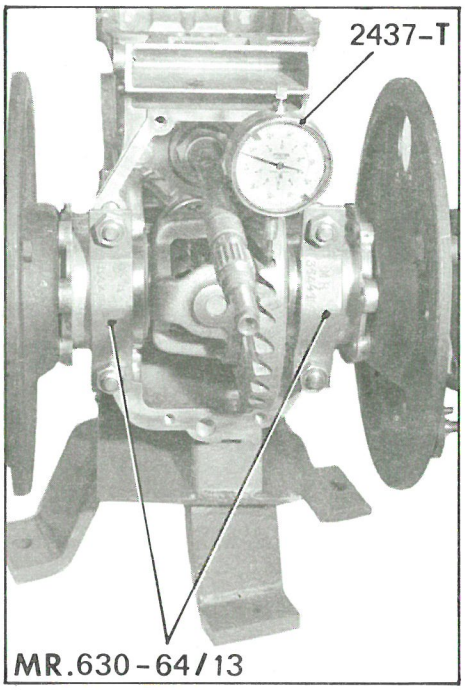

3212

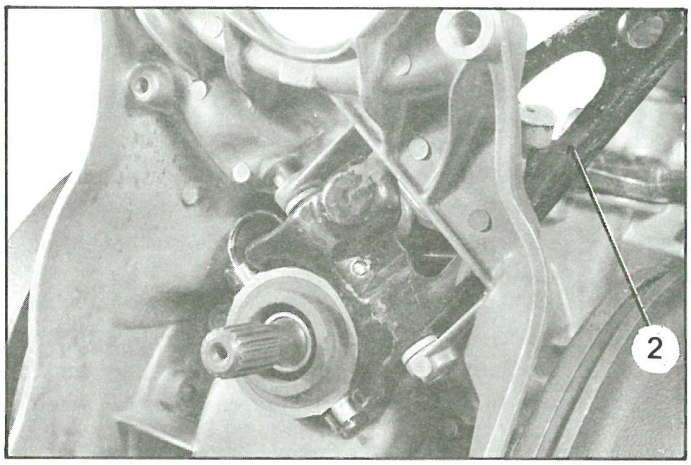

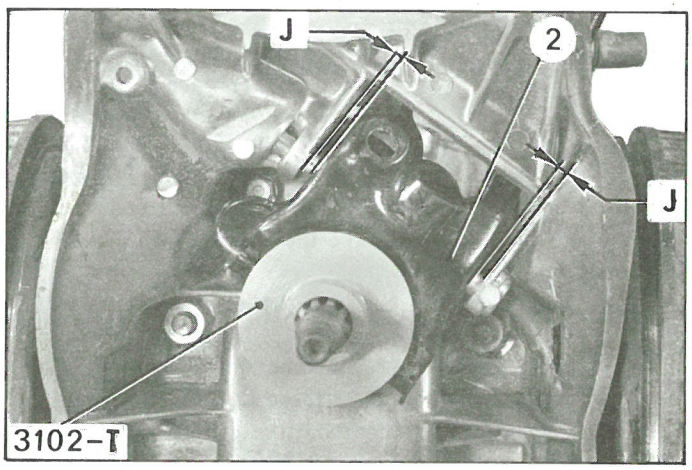

e) Determine the thickness of the adjusting shims to be removed from the right-hand side and placed on the left-hand side.

NOTE : Moving one adjusting shim having a thickness of 0.1 mm will cause a variation of 0.07 mm approximately in the meshing clearance.

Example : Clearance between the teeth measured = 0.77 mm
minimum clearance to be obtained = 0.14 mm
difference = 0.63 mm

The thickness of the shims to be moved in this case is therefore :

$$\frac{0.63 \times 0.1}{0.07} = 0.90 \text{ mm}$$

Loosen the two clamps MR. 630-64/13.
Remove the left and right-hand hubs.
Take away from the right-hand hub, shims of the thickness determined above (in the example given : 0.90 mm) and position them under the left-hand hub.

Fit the hubs.

Tighten the two clamps.

Check the clearance between the teeth and make any necessary modification by changing one or several shims from one side to the other.

Remove :
- the dial gauge 2437-T and the support 2041-T
- the two hubs (mark the shims : do not damage the gaskets),
- the two clamps MR. 630-64/13 .

f) Coat with CURTYLON the mating faces of the clutch housing. Fit the housing, tighten the nuts to between 35 and 45 mAN (3.5 to 4.5 m.kg) and fixing screws to between 15 and 20 mAN (1.5 to 1 m.kg). While tightening, ensure that the bearing faces of the differential shaft hubs on the differential housing and the gearbox casing are in alignment.

47. Fit the clutch selector fork :

a) *Gearbox with graphite clutch stop :*

1°) Centre the fork :
Fit the clutch release fork (2).
Place the bush 3102-T on the driving shaft splines.
Swing the fork so that the two support fork for the clutch stop ring come into contact with the bevelled portion of bush 3102-T.

With feeler gauge, measure clearance on either side of fork at point « j ».

Choose washers with appropriate thickness to leave clearance of between 0.03 and 0.4 mm on either side of the fork.
Remove ring 3102-T, the fork and the shaft.

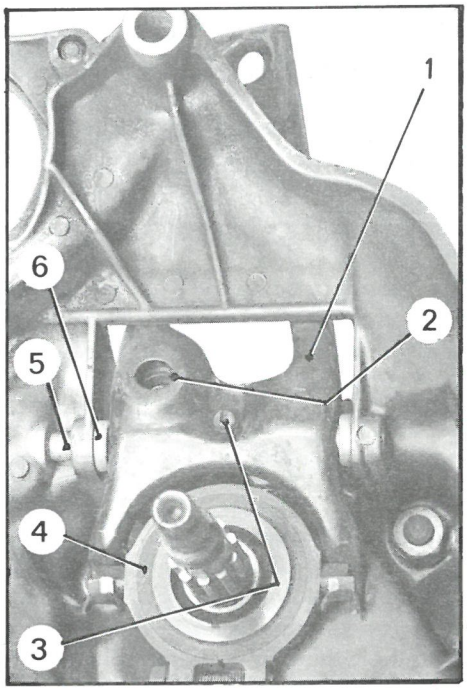

3921

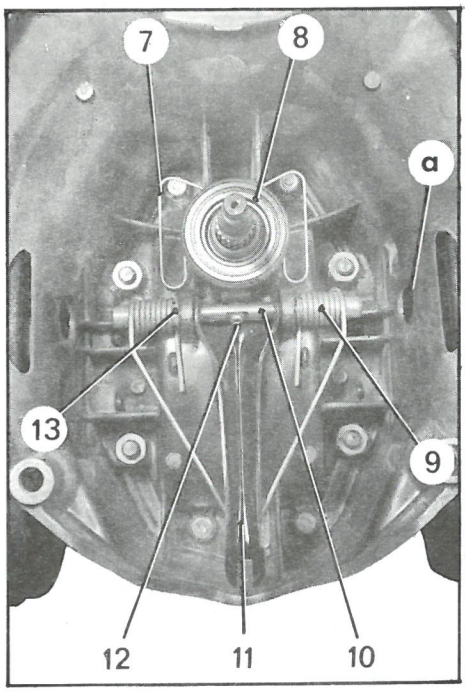

3723

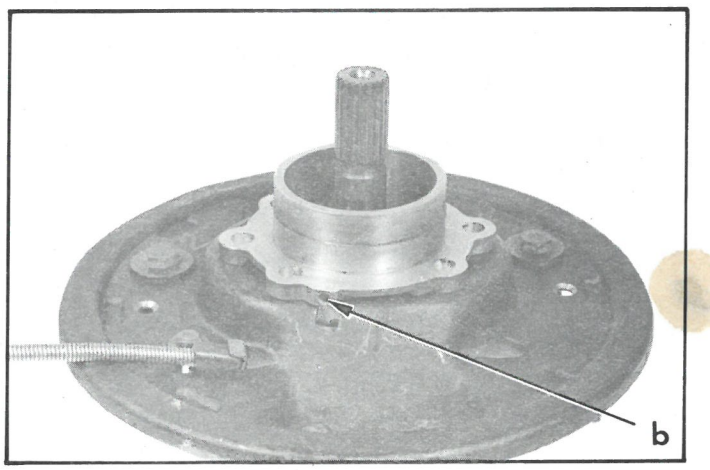

2°) Fit the fork.
Fit the clutch stop ring (4) in the fork (1).
Position the spring (2).
Offer up the fork equipped with its clutch stop ring.

Oil and fit the spindle (5) with thrust washers (6) determined as above (or the distance pieces, for early type housings) and by compressing the spring.

Insert the spindle and position it by turning the screwdriver.

Screw the locking screw (3).

b) *Gearbox with ball bearing stop ring :*

Place in position the-two anti-noise bushes (13) in the spirals of the spring (9), with the shoulders face to face.

Lightly oil the spindle (10).

Hold in position the selector fork (11) and its spring (9).
Insert the spindle (10) through one of the holes « a » in the casing, then through the spring, the fork and the hubs.

Position the spindle and tighten the nut (12). (shakeproof washer).

Fit the stop ring (8) on the hub.

Fit the stop clip (7) locking the bearing stop ring on the fork.

48. Fit the hubs and brake backplates :

- Stick the adjusting shims with grease against the outer bearing rings of the differential bearings.
- Fit the front guide-rods on the backplates.
- Fit the hubs, inserting a gasket.

NOTE : Position (as applicable) the hubs so that the overflow holes « b » point downwards.

Tighten the securing nuts (shakeproof washers) to between 38 and 42 mΛN (3.8 to 4.2 m.kg)

3566

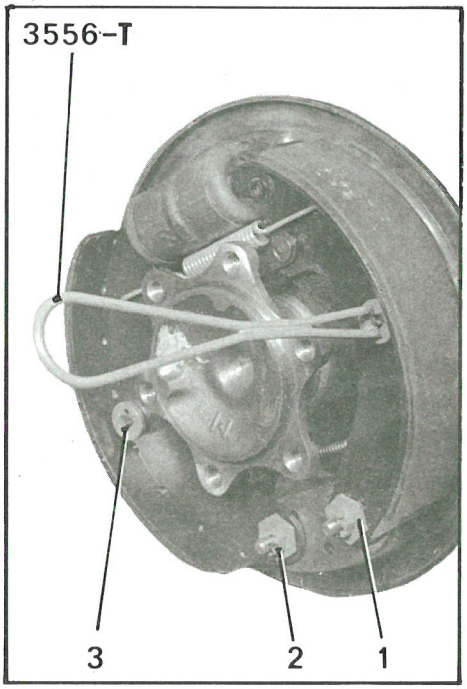

49. Fit the brake shoes :

a) Hook the return springs onto the shoes with the hand-brake lever on the longer shoe.

b) Position the shoes, hooking the hand-brake cable to lever.

c) Lightly oil the adjusting eccentrics (1) and put them in position. Fit the plain washers and the nuts (2), provisionally tighten them

d) Fit the rear guide rods, the thrust springs and the retaining caps (3), locking them with tool 3556-T.

Ensure that the shoes operate freely.

50. Fit the wheel cylinders :

- Separate the brake-shoes by turning the adjusting cams to the maximum.
- Fit the wheel cylinders. Fit the adjusting screws (spring washer).

Bring the adjusting cams to their initial position.

51. Centre the brake shoes :

(Use centring apparatus 3570-T)

52. Fit the brake drums :

True drums if necessary, using *(as applicable)* mandrel 2118-T or MR. 630-35/7, or mandrel MR. 630-35/11.

Fit the drums and drive shafts on drum side *(as applicable)*.

Tighten the screws to 45 mAN (4.5 m.kg) or nuts to 25 mAN (2.5 m.kg).

PL. 440

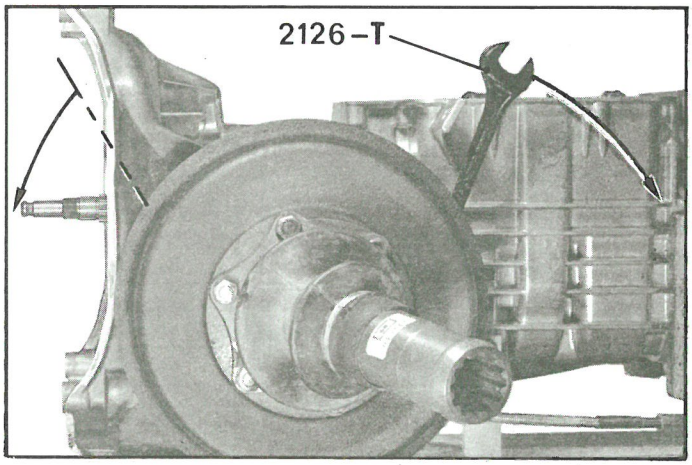

53. Adjust the brake shoes :

Turn the cam spindle using spanner 2126-T (or a 14 mm ring spanner) in the direction shown opposite, at the same time turning the brake drum by hand until the brake shoe comes in contact with it. Withdraw the shoe lightly to free it and bring it forward again until the lining exerts a light pressure. *(Never complete the adjustment by withdrawing the shoe from the drum).*

Proceed in the same manner for the other shoe.

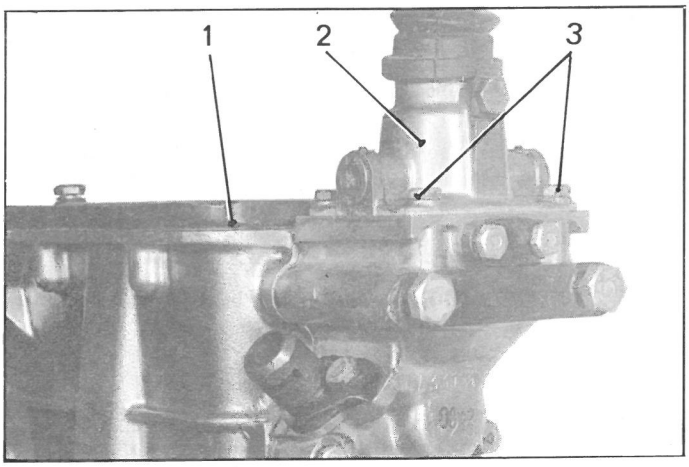

54. Fit (as applicable) gear change forks control lever on the rear cover :

Pack the lever (2) on the casing with grease (TOTAL MULTIS).

Position the lever, inclining it towards the left to clear the selector fork tip (if fitted).

Tighten the four fixing screws (3). (spring washer).

Check the operation of the lever.

55. Fit the upper cover :

a) *Gearbox with control lever on the rear cover :*

Fit a cork gasket with CURTYLON on the cover (1).

Tighten the screw (spring washer).

b) *Gearbox with control lever on the upper cover :*

Ensure that the forks are all in « neutral » position.
Coat the faces of the cover joint with CURTYLON paste.

Fit in position the spring (5) for the locking ball of fork spindle for 2nd and 3rd.

Fit the cover, positioning the spindle control lever so that its ends fits into notch « a » in the fork spindle of 2nd and 3rd speed.

Position the fixing screws except those at at points (4), (6), and (7). Tighten moderately.

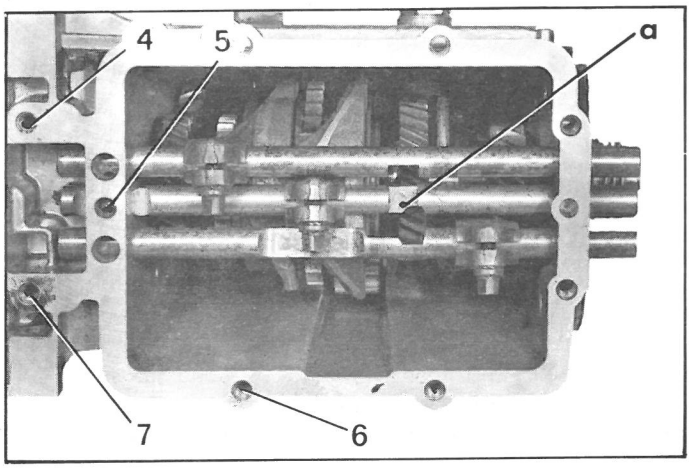

56. Fit the brake piping :

a) *Gearbox with control lever on the rear cover :*

Fit the right-hand connecting tube (9) with its fixing lug (10) and a copper joint on either side of the screwed union (8) and tighten this screw provisionally.

Fit the left-hand connecting tube (12).

Provisionally assemble left and right-hand connecting tubes with the distribution connection (11) fitted with a copper joint.

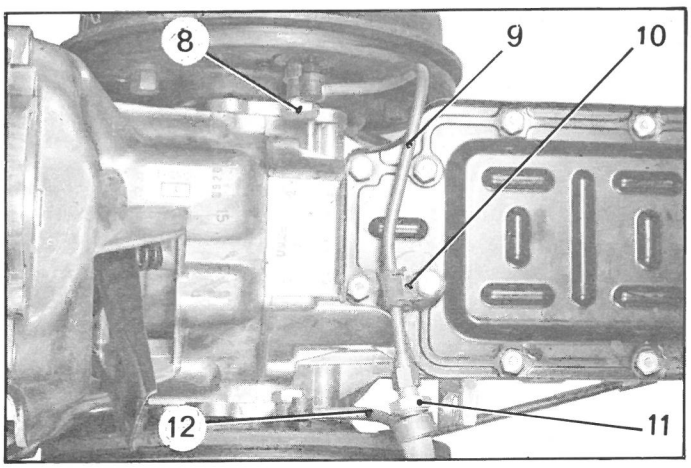

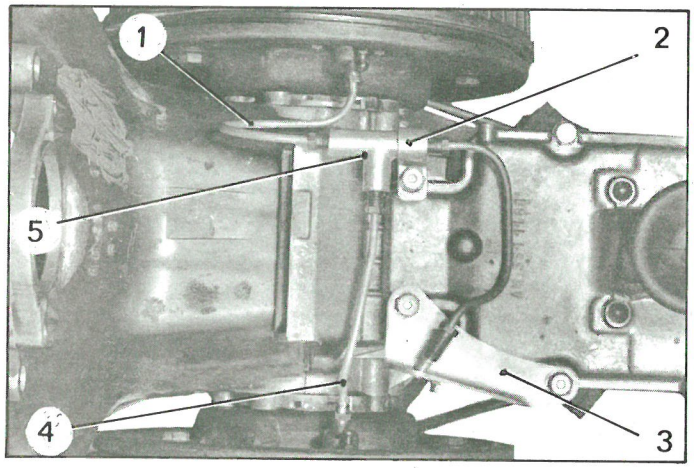

Fix the right-hand connecting tube to the upper cover fit a distance piece ; tighten the screw (flat and spring washers).

Tighten the union screws to the wheel cylinders.

NOTE : The distribution connection is tightened after fitting the gearbox on the vehicle.

b) *Gearbox with control lever on the upper cover :*

NOTE : The sealing of the brake lines is achieved by seals which must be renewed after each dismantling.

IMPORTANT : Never use jointing marked in green, which deteriorates rapidly under the action of brake fluid used in this type of vehicle.

When fitting, the seal « a » should stand down 2 mm below the end of the tube « b ».

Centralize the tube in the bore offering it up in the centre of the hole.

Ensure that the end of the tube « b » enters well the small bore at « c ».

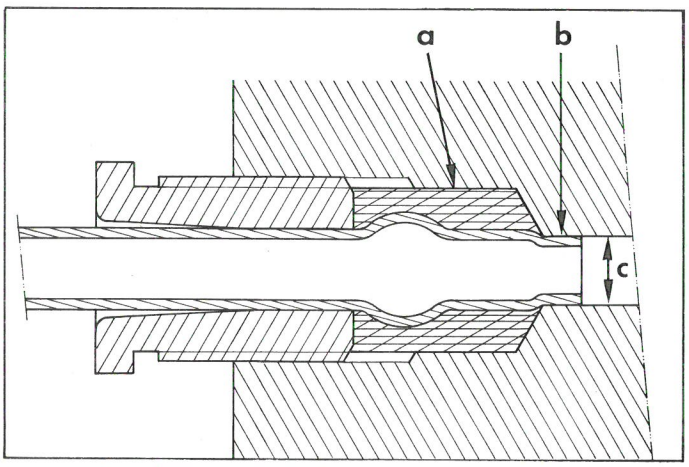

Start fitting the union screw by hand and tighten it moderately 6 to 8 mΛN (0.6 to 0.8 m.kg).

Provisionally connect :

- the left-hand (4) and right-hand (1) brake piping to wheel cylinders,
- the three-way union (5) to the brake piping.

Fix the three-way union to the casing with a clip (2)(distance piece plain washer and shake-proof washer).

Finally tighten the union screws.

Fit the bracket (3) securing the connection. Tighten the screws (distance piece shake-proof washer).

57. Provisionally fit the oil filter plug with metalloplastic gasket.

Tighten the drain-plug, fitted metalloplastic gasket.

58. Remove the gearbox from its bracket MR. 630-43/3.

FITTING THE DISCS AND THE BRAKE CALIPERS.

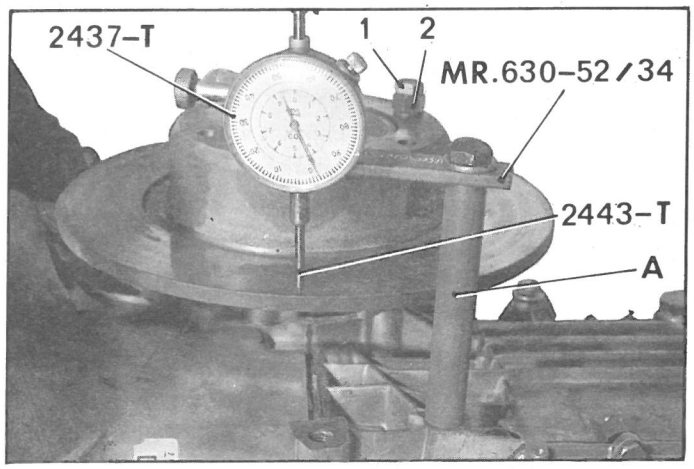

58. Fit the brake discs :

Position the discs. Fix them by means of three securing bolts (1), equipped with spacers (2) (thickness = 10 mm).
Tighten bolts **from 4.5 to 5 m.daN (33 to 36.8 ft. lbs).**

59. Check the disc run-out :

- Use support MR. 630-52/ 34, fitted with comparator 2437-T (with extensions 2443-T).
- Secure the support and distance tube (A) on the gearbox housing using a bolt for brake caliper fixing (see the figure).
- Rotate the disc : *the run-out must not exceed 0.20 mm.*
- If it does exceed 20 mm, choose among the six positions of the disc, the one which gives the minimum run-out. If the run-out chosen is still superior to the authorized value, change the disc.

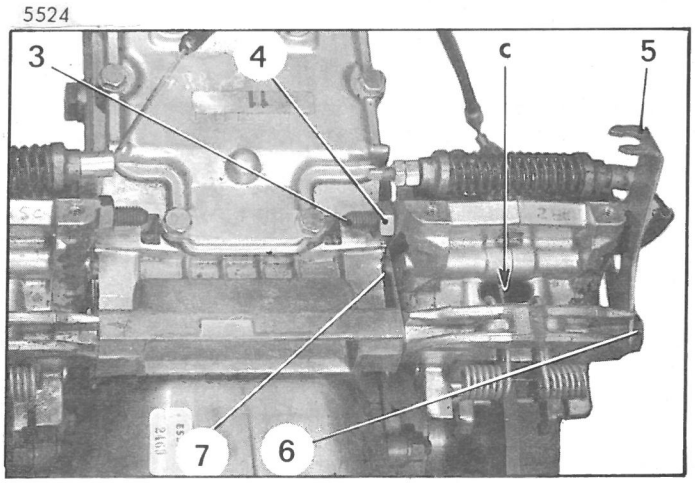

60. Fit the brake calipers :

- Position the caliper (prepared in para. 28) equipped with shim (7) (identified when removed).
- Fit securing bolt (6) without fully tightening it. (plain washer under bolt head, R.H. side, and bracket (5) on L.H. side).
  Swing the caliper in order to position it on the disc. (If necessary, release the rubber holding the securing brake pads in position).
- Remove nut (4), free bolt (3) and position the caliper.
- Fit securing bolt (3), checking that shim (7) is correctly positioned.
  Tighten bolts (3) and (6) **from 4.5 to 5 da Nm (33 to 36.8 ft. lbs).**

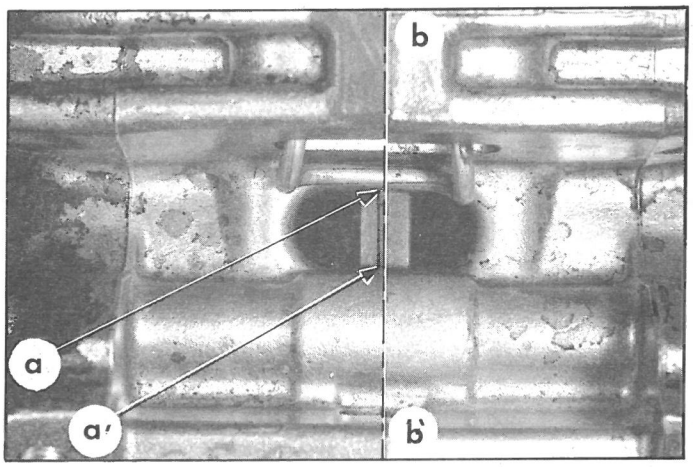

61. Check the caliper position in relation to the discs :

- Make an identification mark « a a' » on the edge of the disc, at an equal distance from the two faces.
- Rotate the disc so that the mark appears through hole « c » of the caliper.
- This mark must coincide with seating surface « bb' » of the two half-calipers.

62. Fit the main brake pads.

5515

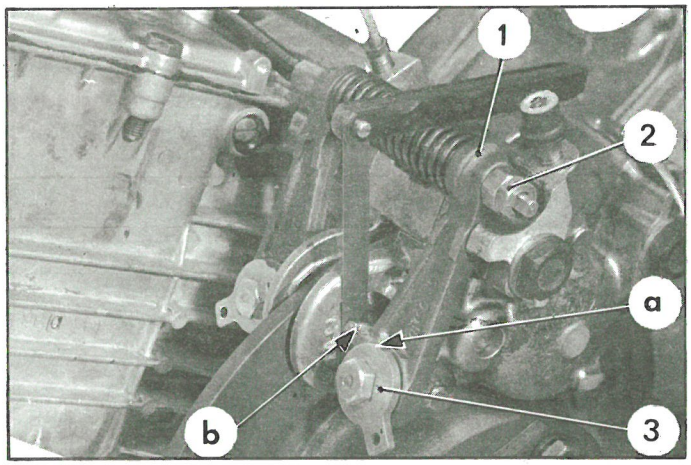

63. Adjust the position of the handbrake pads :

- Check that eccentrics (3) are orientated as shown on the opposite figure (position notches « a » in relation to levers (1)).
- Bring one pad into contact with the disc, using its eccentric , and determine the point of maximum run-out. Then, adjust the eccentric so as to obtain *a 0.10 mm free-play between heel « b » of lever (1) and the pad.*
- Adjust the other pad in the same way.

5523

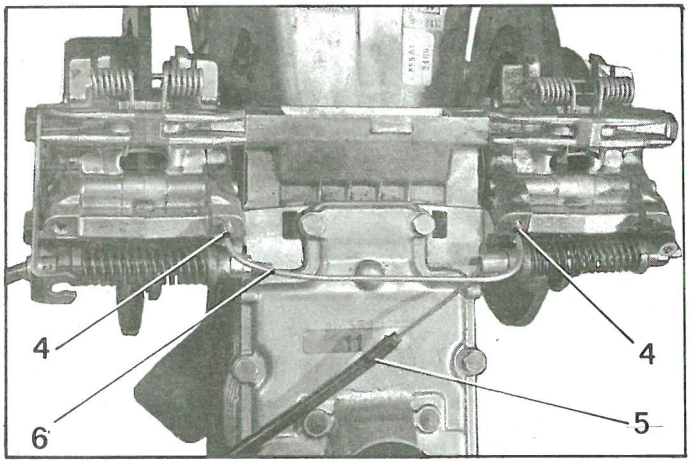

64. Fit connecting pipe (6) :

The correct sealing of unions (4) is ensured by sleeve-seal (7).

For this type of vehicle, only use sleeve-seals identified by a green paint mark.
Any other sleeve-seal would be rapidly damaged by the LHM mineral fluid used for these brakes.

Each time the tube is removed, these sleeve-seals must be replaced.

TT.00-5

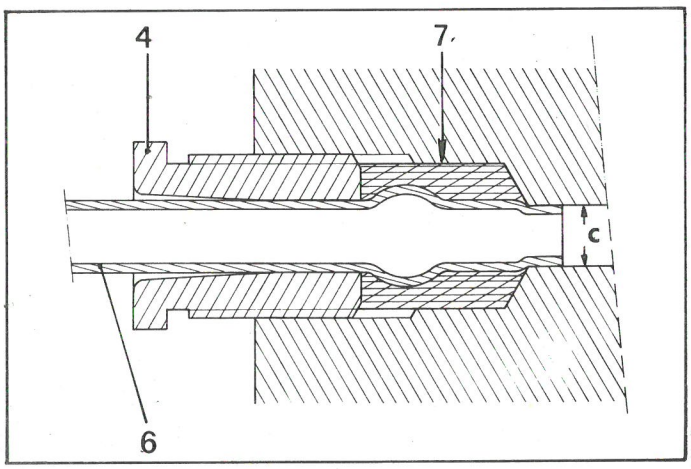

When fitting the brake, the sleeve-seal must be at 2 mm from the end of the tube.

Centre the tube in the bore, positioning it according to the centre line of the orifice.

Make sure that the end of the tube correctly enters the small bore at « c ».

Screw the union-nut by hand and slightly tighten it : **from 0.8 to 0.9 m.daN (5.8 to 6.6 ft.lbs)**. This slight tightening is enough to ensure a correct sealing. *Tightening too strong would entail a leak.*

5520

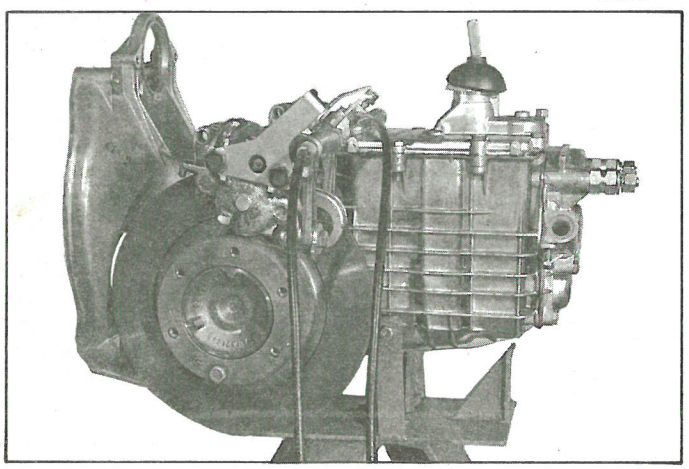

65. Temporarily fit the oil filler plug and its gasket.

Remove the gearbox from its bearer.

OVERHAULING A FORK CONTROL LEVER

I. Gearbox with control lever on the rear cover

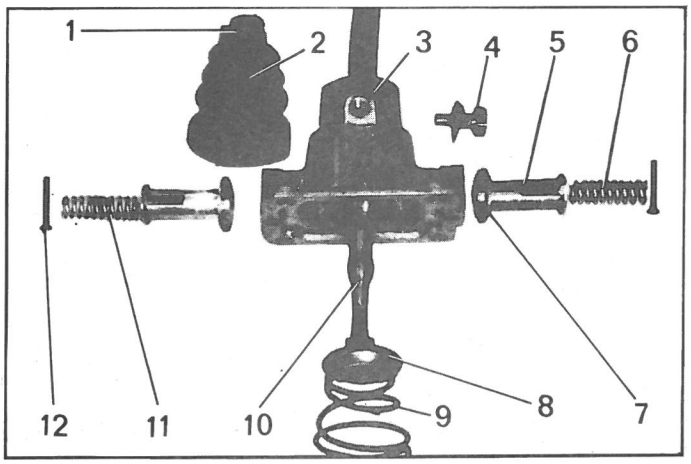

REMOVAL.

1. **Remove :**
   - securing clamp (1),
   - dust cover (2).

   Compress two springs (6) and (11) by means of a screw driver ; take out the two rivets (12) and release springs (6) and (11), pistons (5) and if necessary, shims (7).

2. **Remove :**
   - springs (9) of lever (10),
   - cup (8) of bracket (3),
   - lever (10),
   - bolt (4).

3. Clean the elements.

FITTING.

4. Fit lever stop screw (4). Bend back the lock plate.
   Fit lever (10) (with the ball-joint previously greased).

   Fit :
   - cup (8),
   - spring (9) (compress it by means of a screw-driver),
   - springs (6) and (11) in the pistons (grease them).

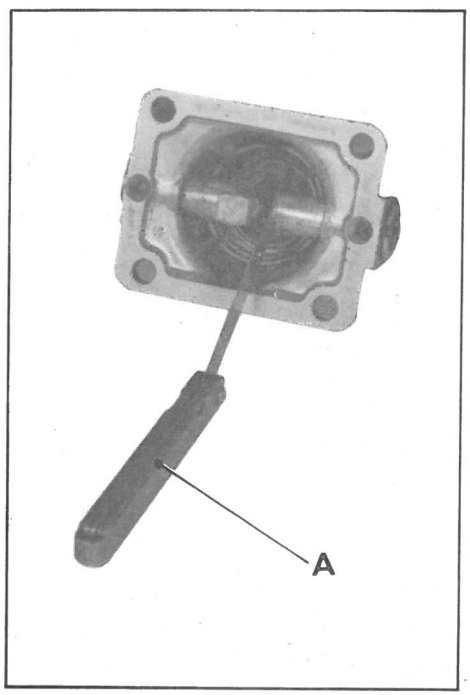

Springs (6) and (11) are different for gearboxes with no guiding pin :
- spring (6), on the R.H. side : wire dia. = 1.7 mm, number of spires : 9,
- spring (11), on the L.H. side : wire dia. = 1.3 mm, number of spires : 12.

In this case, the adjustment mentioned here-below has not to be carried out.

5. **Adjust the pistons :**
   Pistons (5) must rest on bracket (3).
   Bring lever (10) into contact with one piston.
   Position a set of shims A between the other piston and the lever (the free-play must be 0.6 mm). If it is not, place a shim (7) of the required thickness between the contact area of one piston and bracket (3), so as to obtain the correct free-play.

6. Fit rivets (12) (make sure that the head does not protrude from the bracket seating surface).

7. Fit dust cover (2). Tighten clamp (1).

II. Gearbox with control lever on the upper cover.

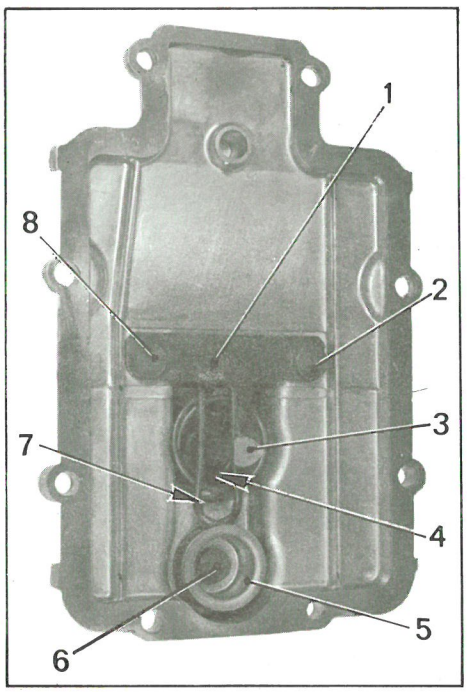

REMOVAL.

1. Remove the three rivets (2), (6) and (8).
Burst the enlarged part of the rivet by drilling a 7 mm dia. hole.

2. Release :
- guide (1) of the return spring,
- cup (5),
- return spring (7),
- ball-joint spring (4),
- lever (3) controlling the forks,
- ball-joint orientation pin.

FITTING.

3. Prepare the cover.
a) Fit guide (1) of the return spring, by means of two hexagonal bolts (7 × 100, length = 20 mm) and of two «Nylstop» nuts (plain washer).

> NOTE : If no « Nylstop » nut is available, use a 7 × 100 standard nut, a serrated washer and a plain washer.
> Compress some screw threads so as to stop the nut.

b) Grease the housing of the control lever ball-joint (TOTAL MULTIS).
Place the orientation pin.

4. Fit :
- lever (3) controlling the forks, the ball-joint being previously greased (TOTAL MULTIS),
- spring of ball-joint (4) by inserting its end in the corresponding hole of the guide,
- return spring (7),
- cup (5). Fit it by means of a TH bolt, dia. = 7 × 100, length = 20 mm, a plain washer and a « Nylstop » nut *(see remark in para. 3).*

I. REMOVING AND FITTING A FRONT AXLE

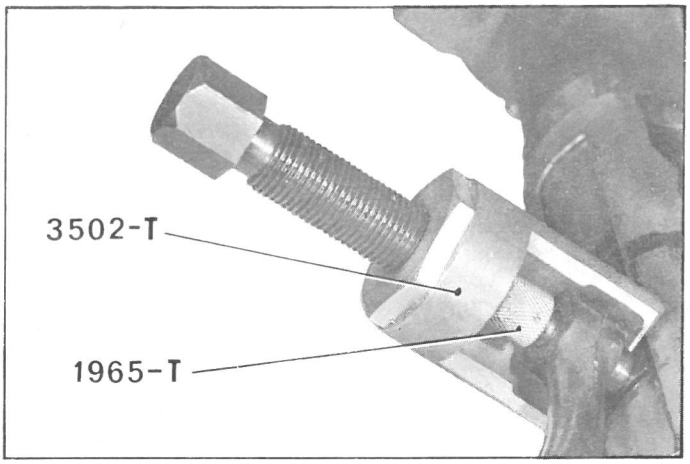

REMOVAL

1. Place the axle on a stand (stand MR 630-42/4).

2. **Disconnect the steering arms from the rack ball pins :**

Cut and free the anti-rattle plate to enable the extractor to be used.
Remove the securing nuts.
Remove the arms using the extractor 3502-T fitted with bead 1965-T.

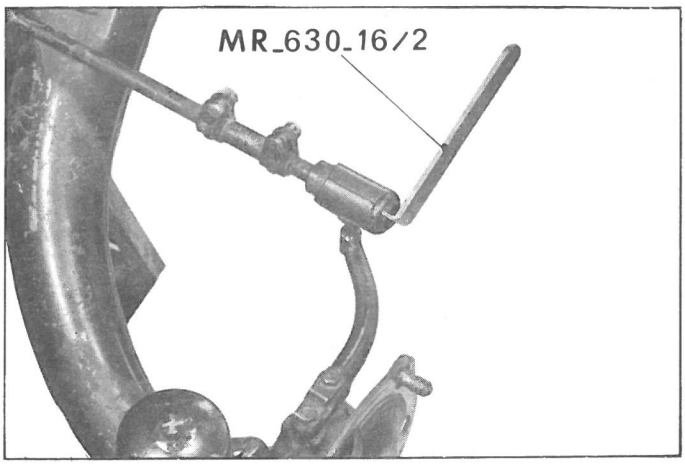

3. **Disconnect the left-hand steering arm from the pivot lever :**

(The right-hand arm was dismantled when the axle was removed).

Remove the split pin and then the nut (spanner MR 630-16/2).
Free the dust cover.
Free the arm bringing the flats on the ball joint in line with the slot in the extension piece.

4. **Remove the rear support from the engine-gearbox assembly.**

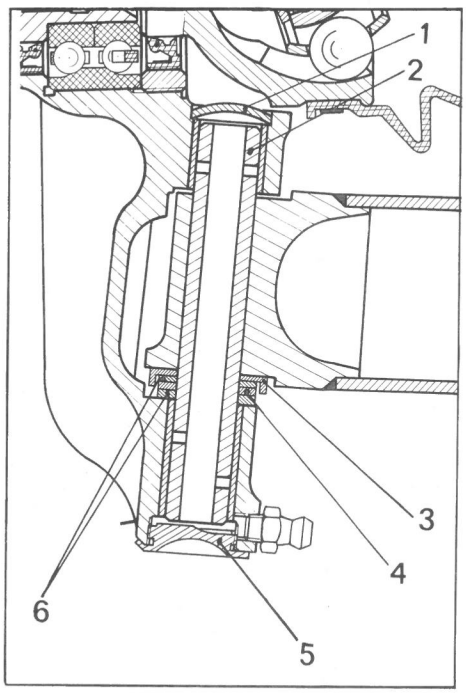

5. **Remove the left-hand arm :**
(The right-hand arm was dismantled when the axle was removed)

Remove, if applicable, the sealing sheath protection housing, and the friction damper.
Remove the split pin and also the bearing adjusting nut (spanner 1833-T).
Disengage the arm from the axle crossmember by tapping on the hub of the arm with a mallet, if necessary.

6. **Remove the dampers :**

7. **Remove the pivots :**

Unscrew the lower pivot plug (5) and remove it with a screwdriver.
Drive out the expanding plug (1) using a drift 7 mm in dia., and 200 mm long.
Remove king pin (2) under the press.
Drive out the spindle with a short mandrel : dia. = 16 mm, length = 25 mm, then complete operation using a shouldered mandrel measuring : small diameter 8 mm, length 20 mm, large diameter 16 mm, length 150 mm.
Disengage the pivot with the friction washer (4), the thrust washers (6), and the dust cover (3).

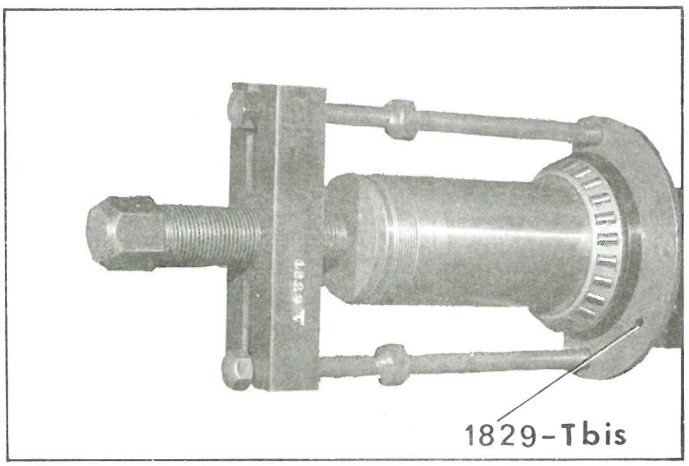

8. **Remove the inner bearings :**
Introduce the stirrup of extractor 1829-T bis behind the gasket, and extract the gasket and bearing assembly (bead dia. = 49 mm).

NOTE : It is possible to convert extractor 1829-T into 1829-T bis (see MR. 630-22/13).

9. **Check (if necessary) the axle arms :**
(see chapter II).

10. **Strip the pivots :**
a) Using a 4 mm dia. drill remove the centre punch marks which lock the bush-nut.
Remove the bush-nut, using the central end-piece of assembly 3301-T or 3321-T (without outer guide) and spanner 3303-T or 3304-T.
b) Drive the hub from the pivot, using a mandrel MR. 630-31/39, on a press.
c) Drive out the bearing from the bore of the pivot, using a copper drift, if necessary.
NOTE : The outer cage of the bearing rests on the stub-axle. In this case remove this cage with extractor 1813-T or extractor 2405-T.
d) Drive out the sealing bushes from the pivot and the bush-nut.
e) Remove the coupling lever from the pivot.
f) Drive out the upper and lower bushes from the pivot. Use a shouldered mandrel :
small diameter = 16 mm, length = 30 mm
large diameter = 20 mm, length = 120 mm
g) Remove the grease nipple

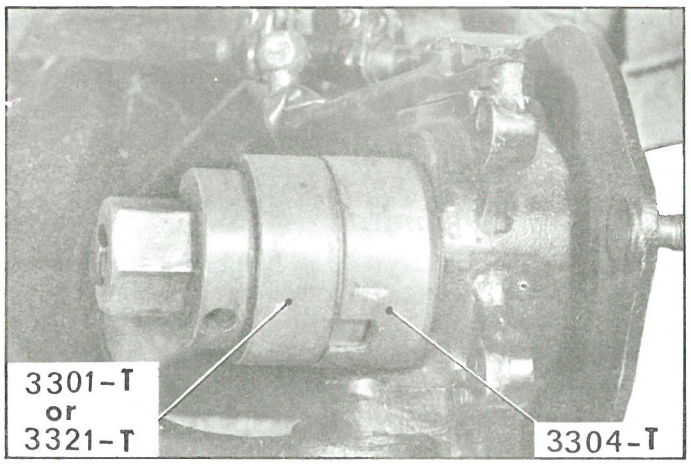

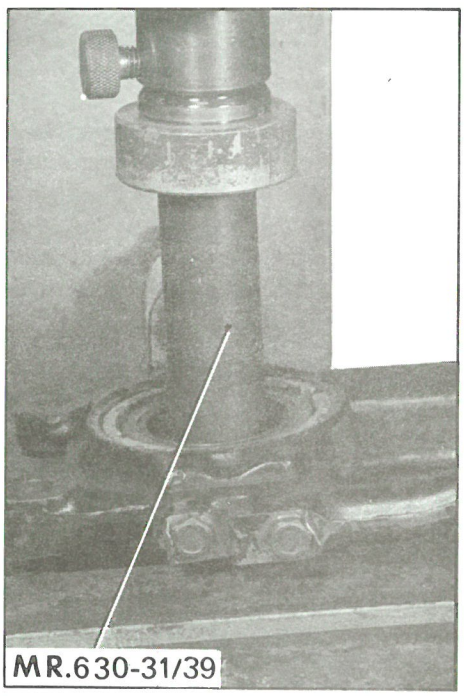

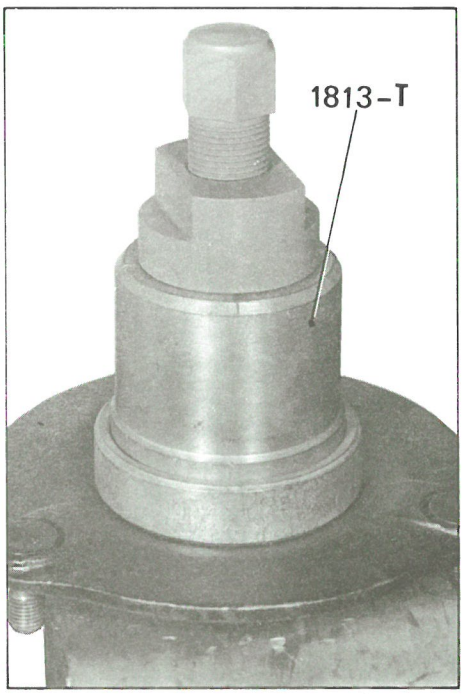

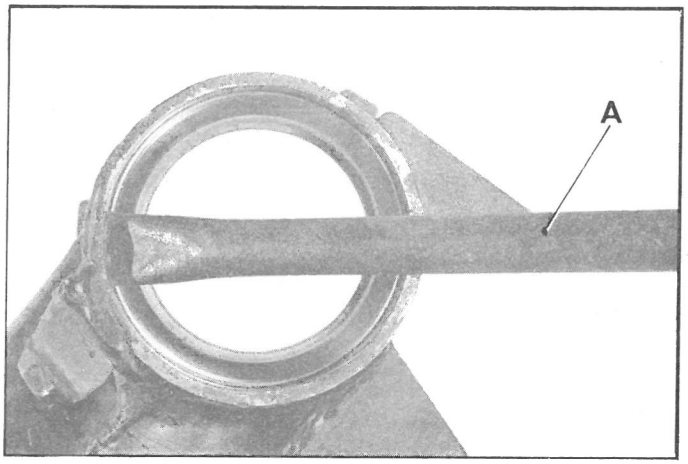

11. **Strip the arms :**

Remove the outer races of the bearing from the bore of the axle arms, driving them out with a square edge pin punch A.
Remove the steering lock adjusting screws.

12. **Remove the steering and recondition it if necessary :** *(see relevant Operation).*

13. **Check (if necessary) the crossmember :**

Place the inner bearing surfaces on two identical vee blocks resting on a surface plate.

With a dial gauge check the outer bearing faces by turning the crossmember. Any variation registered on the dial gauge throughout one turn of the crossmember must not exceed 0.2 mm.

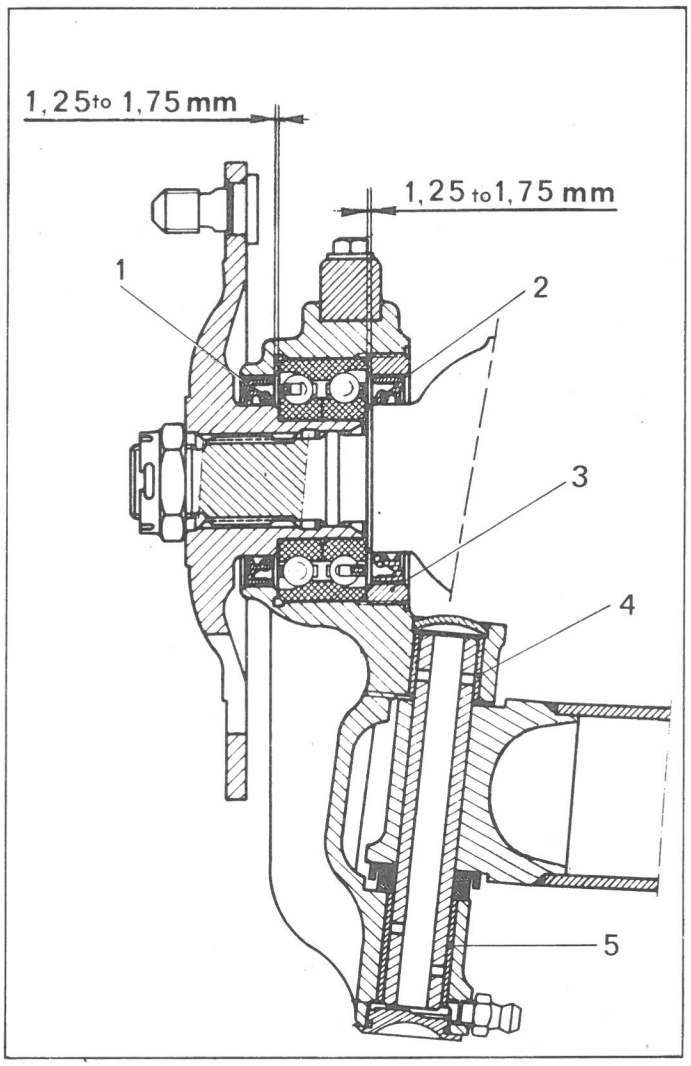

14. **Thoroughly clean all the parts.**

FITTING

15. **Prepare the pivots :**

a) Fit the upper and lower bushes (4 and 5) in the pivots, using a shouldered mandrel and a press.
Mandrel dimensions :
small diameter = 16 mm, length = 30 mm
large diameter = 20 mm, length = 120 mm

NOTE : Bushes must not be rebored after fitting.

b) Fit the sealing bush (2) in the bush-nut (3) the lips of the bush arranges towards the bearing.
The sealing bush must stand down 1.25 to 1.75 mm below the bearing thrust collar (mandrel MR. 630-31/55).

c) Place the sealing bush (1) in the bore of the hub.
This bush also must stand down 1.25 to 1.75 mm below the thrust collar of the bearing.

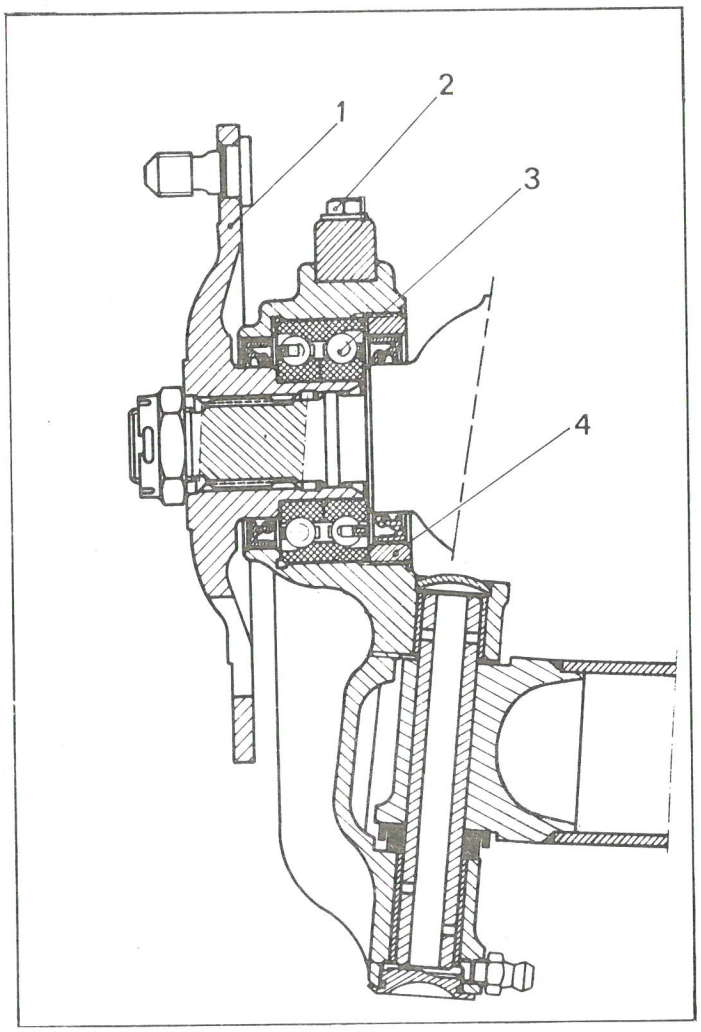

d) Check the bearing. Secure the two inner cages to each other, using a bolt and two washers. Check the clearance of the bearing. Grease the bearing (3) (TOTAL MULTIS) and fit in position in the bore of the pivot using a punch MR. 630-31/55 applied to the outer race of the bearing.

e) Screw up and tighten the bush-nut (4) to between 350 to 400 mN (35 to 40 m.kg) (face and threads greased).

Use the central extension of assembly 3301-T (without outer guide) and spanner 3303-T or 3304-T. Lock the bush with two blows from a centre punch, diametrically opposed.

f) Fit the coupling lever on the pivot. Tighten the screws (2) to 20 mN (2 m kg) and turn over the lock washers on the flat face of the screws.

g) Put the hub (1) in position on the pivot bearing, under a press and using a tube resting on the inner race of the bearing.

Tube outside dia. = 44 mm
inside dia. = 36 mm
length = 200 mm

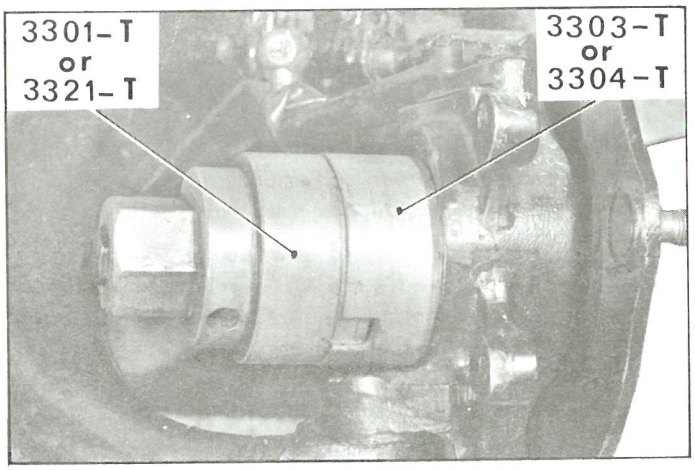

16. Prepare the arms :

The arms are fitted with S.K.F. or TIMKEN bearings.

IMPORTANT :

1°) One must never fit a S.K.F. roller cage in a TIMKEN bearing race or inversely, as the tapers of the rollers are not the same.

2°) One may fit two bearings of different makes on the same arm.

Fit the outer races of the bearings in the arm bore, using a sharp edged pin punch A.
Ensure that the bearings are correctly positioned on their thrust faces.

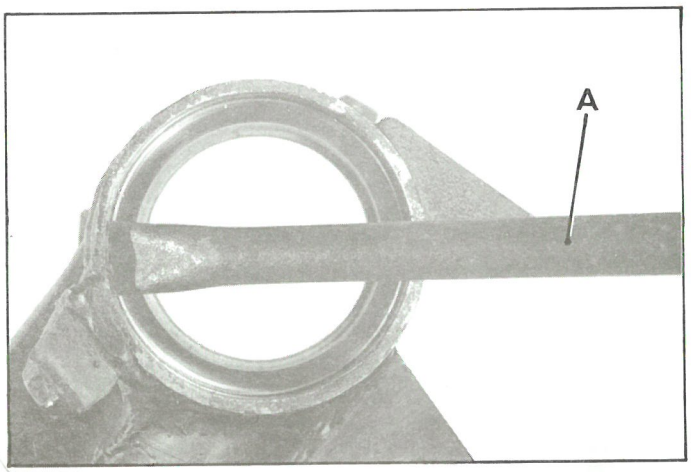

Provisionally tighten the steering lock adjusting screws.

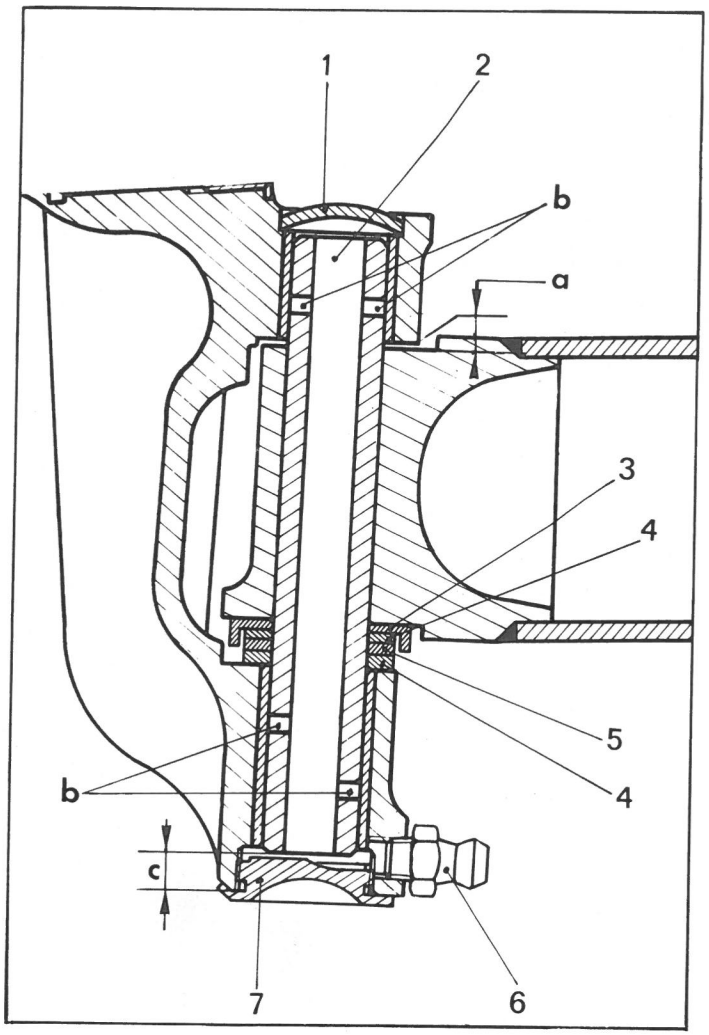

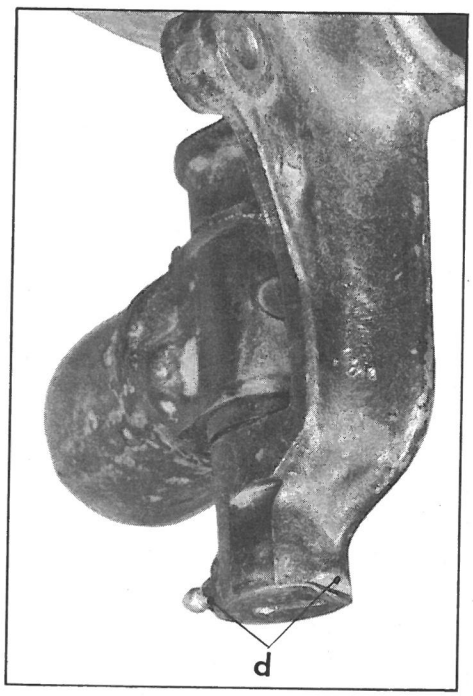

17. Fit the pivots :

a) Prepare a slave pin with a tapered end,
Diameter of pin 16.5 mm
Length 150 mm

b) In the duct cover (3) place :
- a thrust washer (4),
- a friction washer (5)
- another thrust washer (4).

c) Offer up the pivot on the arm,
Between the pivot and the arm, at the lower part, fit the dust cover and washer assembly. Locate this assembly by means of the slave pin.

d) Measure the clearance between the pivot and the arm at « a » using a set of feeler gauges. This clearance should be between 0.1 and 0.4 mm. Satisfy this condition by selecting the correct number of thrust washers (4) from those sold by our Replacement Parts Department.

e) Thoroughly clean the pin (2). Remove the inspection marks with a stone. Oil the upper and lower pivot bushes. Coat the pivot pin with tallow then position it :

Commence the operation using a copper mallet, and finish the assembly under a press.

NOTE : Arrange the holes (b) as shown in diagram opposite. The lower part of the pin should stand down below the lower part of the pivot by an amount « c » = 7.10 to 7.25 mm.

f) Pack the inside of the pin and the spaces between the expanding plug (1) and the lower cap (7) with grease.

Tighten the plug (7) using a screwdriver. Turn down the collar of this cap at two points (d) on the body of the pivot.

g) Fit the expanding plug (1) and flatten it with a hammer to lock it in position. Turn down the metal of the pivot at four points, using a mallet to complete the locking operation.

h) Fit the grease nipple (6).

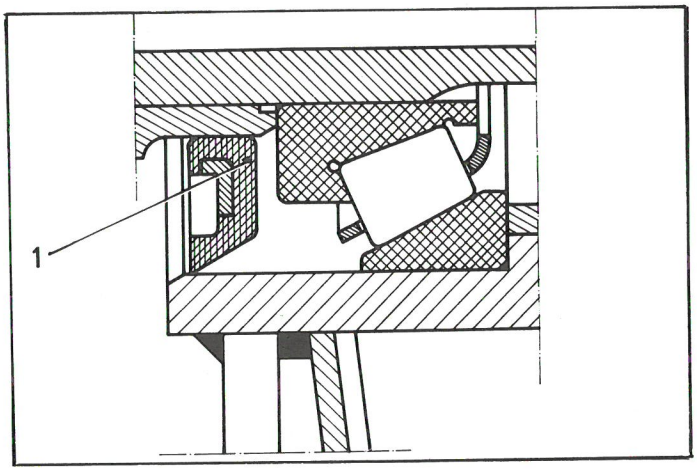

18. Fit the left-hand axle arm :

Fit the oil seal (1) on the crossmember journal (positioned as shown in diagram). Use tube MR. 630-31/54.

Fit the inner bearing race on the axle journal of the axle crossmember (tube MR.630-31/54.

Grease the inner and outer bearings (TOTAL MULTIS).

Offer up the arm with outer bearing races on the crossmember, then drive the outer bearing onto crossmember journal (tube MR. 630-31/54).

Position the rubber seal ring on the bearing adjusting nut. The plain part of the seal should be against the bearing but must stand down 0.1 - 0.5 mm below the thrust face of the nut.

NOTE : The rubber seals must be renewed after each intervention.

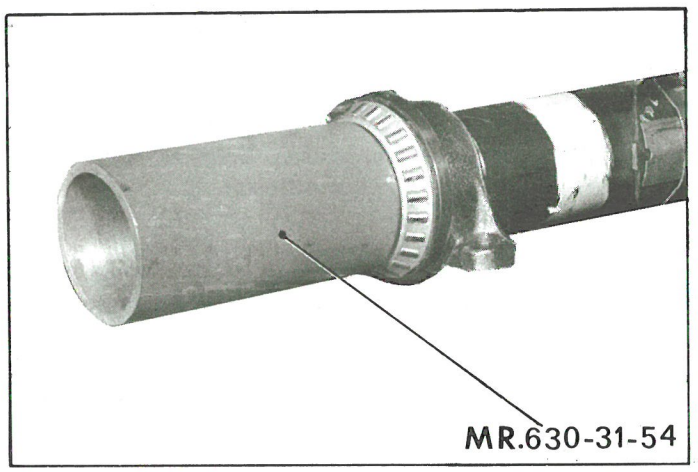

Screw on and tighten the slotted nut to 50 mAN (5 m kg) (spanner 1833-T). The arm should turn freely without any stiffness.

Bring the slot which is nearest to a locking pin hole opposite this hole by tightening the slotted nut. Insert a split pin and open out the ends of the split in the bore of the crossmember.

NOTE : Friction dampers will only be fitted *(according to model)* on the arm after the front axle has been fitted on the platform and the heights adjusted.

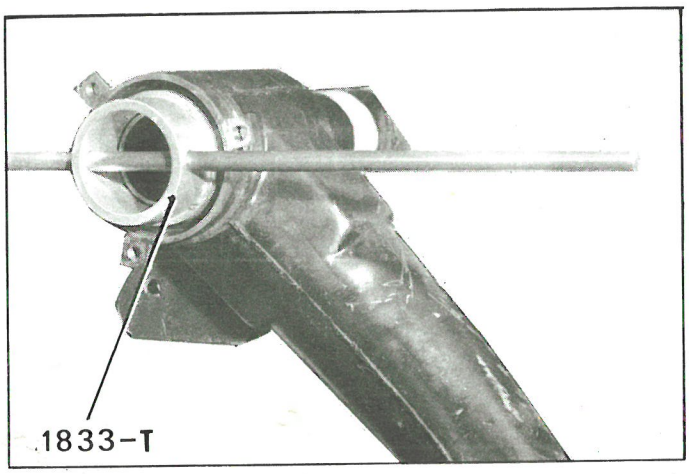

NOTE : *On vehicles built up to September 1965,* fitting the friction dampers can be modified by removing the paper gaskets, provided that a sealing sheath and its clamp are fitted and an early type housing is replaced by one of the new type.

19. Fit the right-hand axle arm :

Proceed as for the left-hand axle arm.

NOTE : This operation has to be carried out only when the body has been removed.

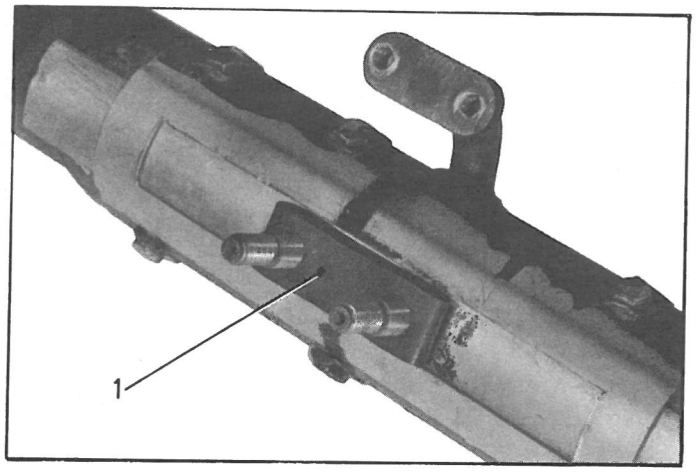

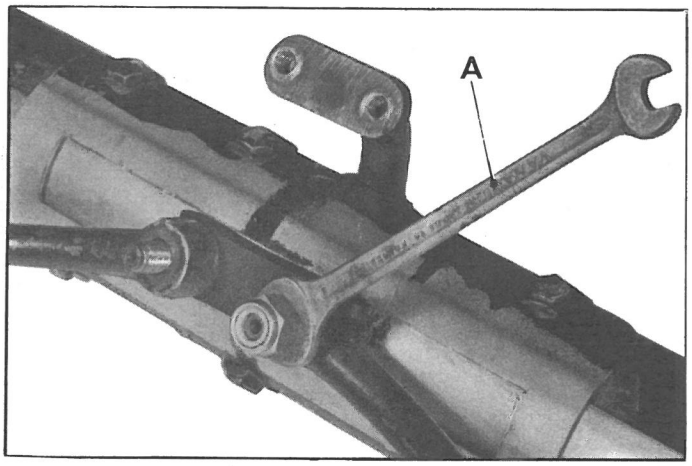

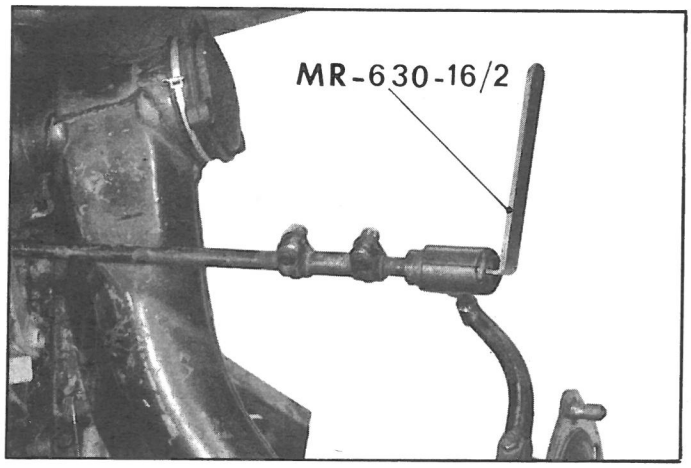

20. Fit the steering rods :

a) *Rack side :*

Fit the ant-rattle plate (1) in position.
Degrease the ball pin cones and those on the rods ball stems.
Tighten the Nylstop nuts to 40 mΛN (4m.kg)
In order to tighten the Nylstop nut, ball must be locked so that it is not rotated when the nylon part of the nut comes into contact with the theads on the ball pin.
Proceed as follows :
Place a forked distance piece (flat spanner A for example) between the rod and the nut.
Tighten the nut until the tapers are gripped.
Disengage the distance piece then tighten the Nylstop nut to 40 mΛN (4 m.kg).
NOTE : Do not re-use old Nylstop nuts.

b) *Pivot lever side :*

Grease (TOTAL MULTIS) the inner housing of the pivot lever. Grease the ball pin and the sockets. Position the spring (4) and the ball seal (6).
With the dust-cover (9) in position on the lever engage the lever ball pins so that the flats are parallel to the steering rod (this facilitates the insertion of the ball pin through the hole).
Slide the dust-cover on the lever and on the steering rod end-piece.

Position the seat (7) of the ball pin. Screw on and tighten the adjusting nut (8) (spanner MR. 630-16/2).
Loosen it about 1/6th of a turn, then fit the split pin.
NOTE : If the adjustable sleeve (3) has been removed, screw it on the adjustable end-piece (4) and on the steering rod (2) :

d1 = d2 ± 2.5 mm

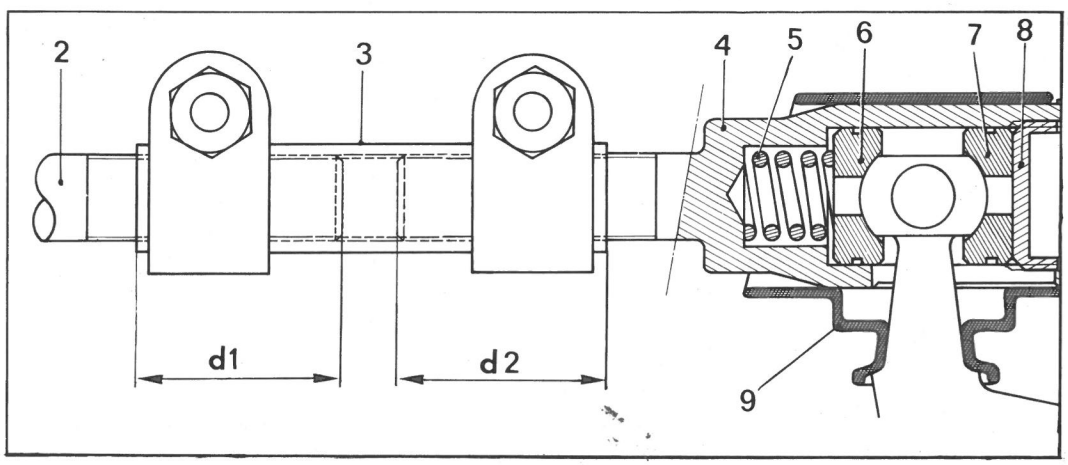

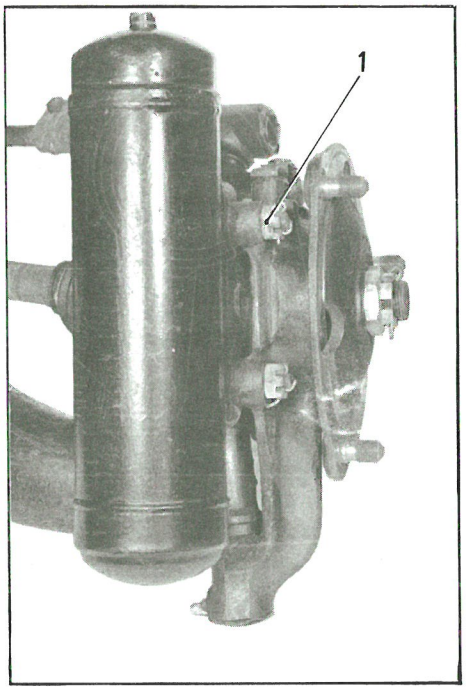

21. Fitting the inertia dampers :

Offer up the damper, the filler plug uppermost.

Tighten the fixing nuts (1) to 60 mΛN (6 m kg) and the pin (if necessary).

22. Fit the rear support for the engine gearbox assembly and tighten the screws.

23. Remove the axle support MR. 630-42/4.

II. REPLACEMENT OF AN ARM STOP

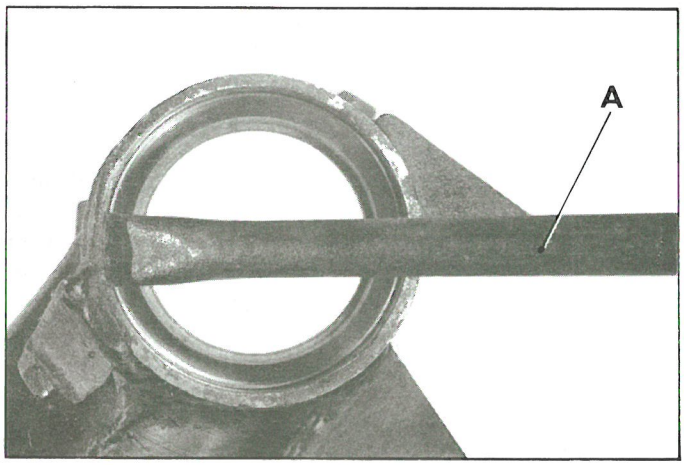

1. Remove the arm

2. Replace the stop :

Disengage the outer race of the bearing, using sharp ended drift A.
Chip off and grind away welding spots of former stop.
Weld the new stop in position as shown opposite.
Use electric arc welding and protect the arm with damp asbestos to avoid all risk of distorting the bore of the bearing.

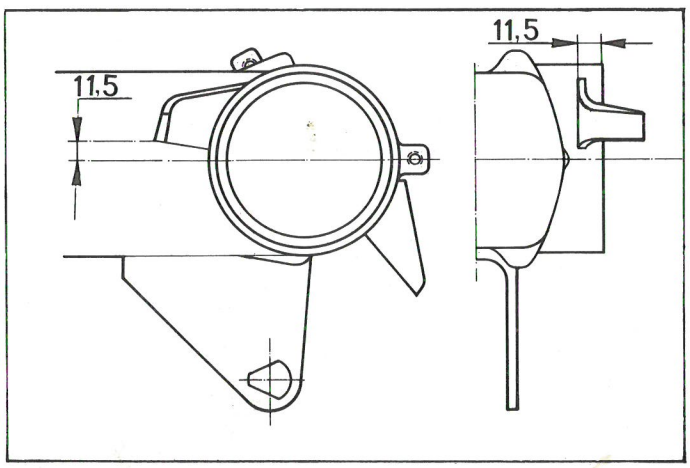

3. Fit the outer race of the bearing using a sharp edged drift. Ensure that the race bears correctly on its support.

4. **Fit the arm.**

III. CHECKING A DISMANTLED FRONT ARM

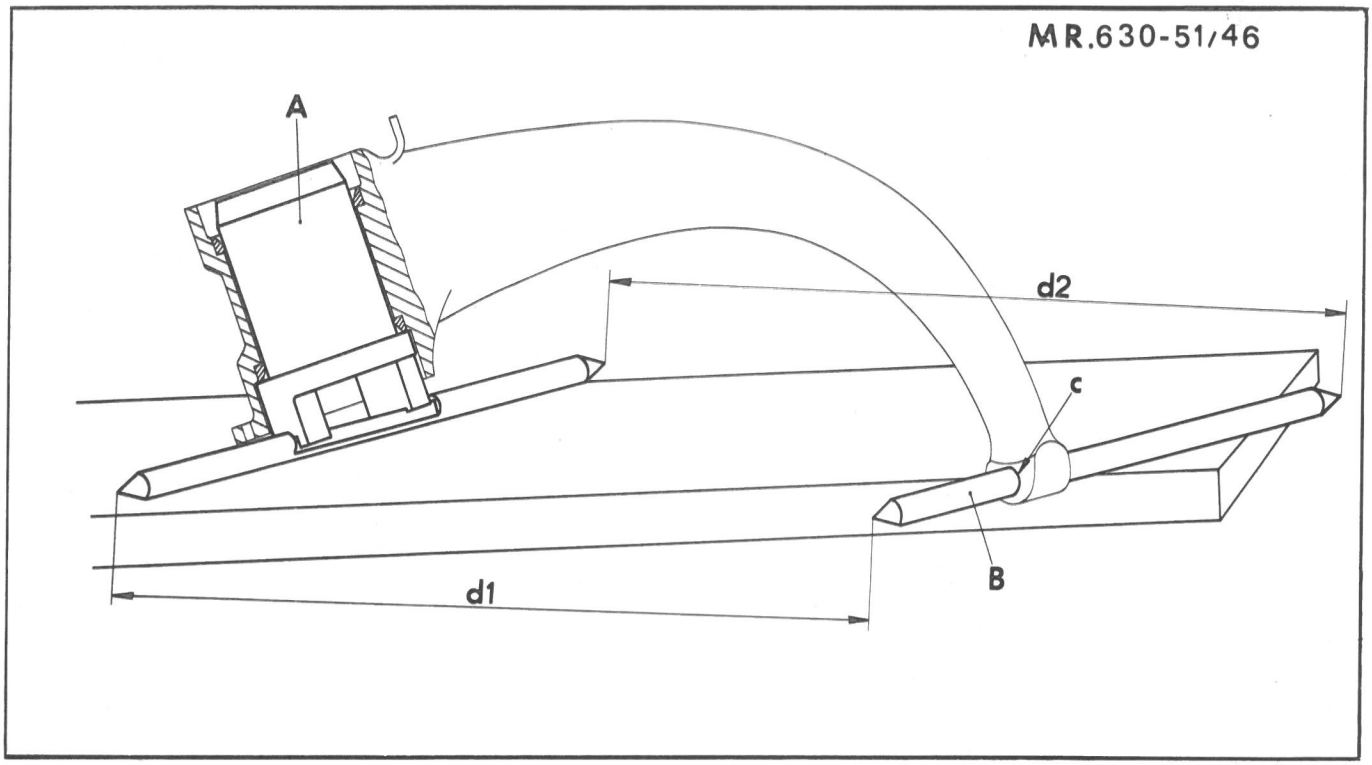

1. Strip the arm.

2. Check the arm :

Position the arm on checking fixture (jig MR. 630-51/46).

Place the pin B in the bore « c » of the king pin.

Set the pin holder mandrel A in the bore of the hub.

Pivot the mandrel A till both pins *rest squarely on the face plate.*

Measure the distance « d1 » between the points of the spindles at one end then the distance «d2» at the other end.

These two measurements should be equal to within approximately 10 mm. If not, the arm must be replaced.

3. Assemble and fit the arm.

I. REMOVING AND FITTING A REAR AXLE ARM

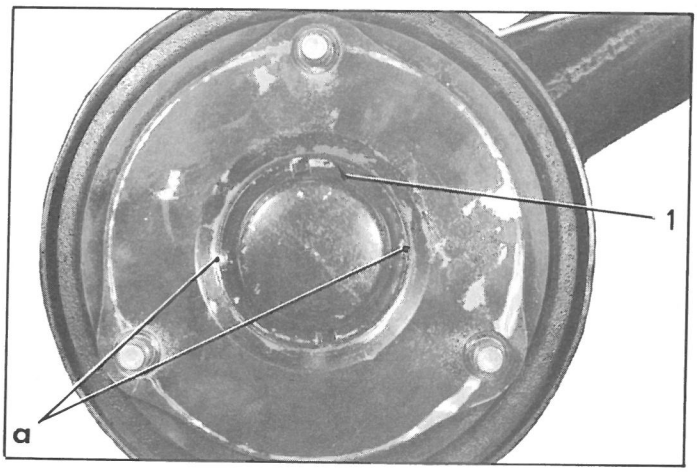

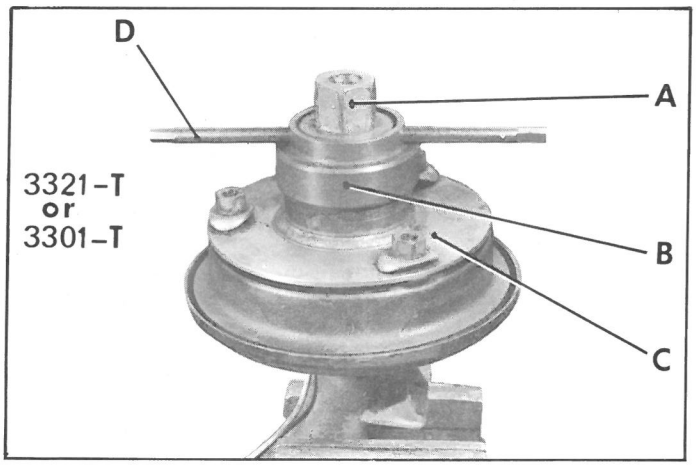

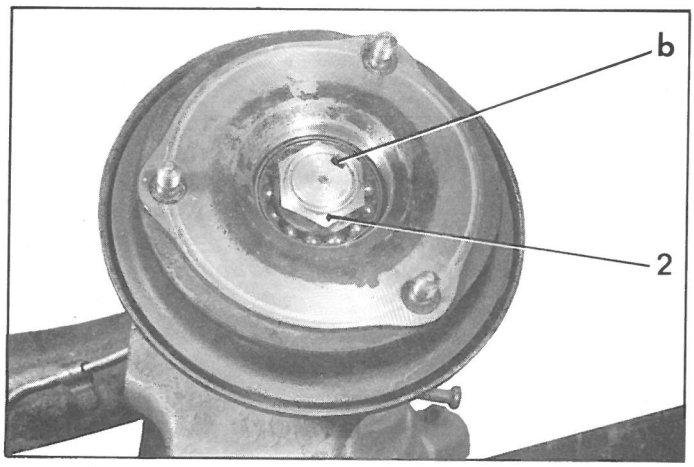

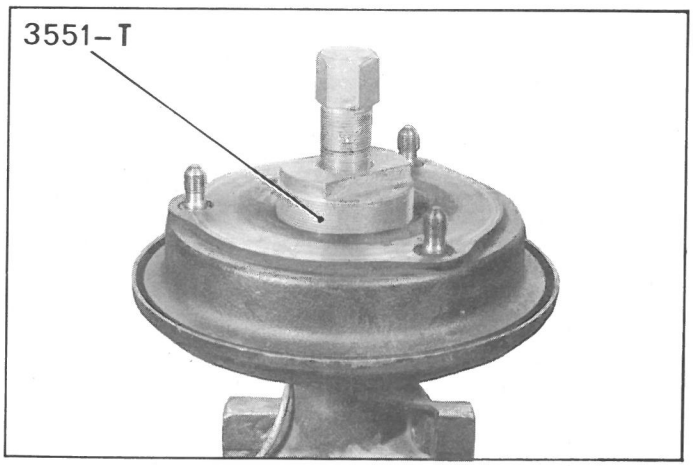

REMOVAL

1. **Remove the inertia damper** (if necessary) :

2. **Remove the hub drum :**

a) Using a 4 mm dia. drill, remove the centre punch marks « a » locking the ring nut (1).

b) Remove the ring nut : use assembly 3301-T or 3321-T with castellated socket 3303-T or 3304-T.

Fix the guide C by the three wheel nuts.

Place castellated socket 3303-T or 3304-T on the ring nut, then the end-piece A.

Screw the nut B without locking it.

Lock the end-piece A and the nut B using a rod D.

Unscrew the ring nut from the hub by turning the end-piece A.

During this operation, lock drum by separating the brake shoes with the adjusting cams or by using tool MR. 630-64/40.

c) Using a chisel raise metal at point « b » turned into the countersunk portion of stub shaft.

Remove the nut (2) locking the bearing.

d) Remove the drum (extractor 3551-T or assembly 3301-T, or assembly 3321-T).

If the brake shoes have been opened to lock the drum when removing the ring nut, bring them together to prevent interfering removal of the brake drum.

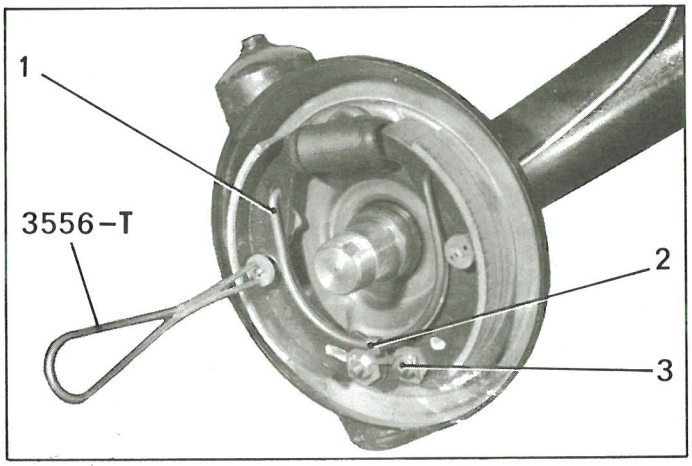

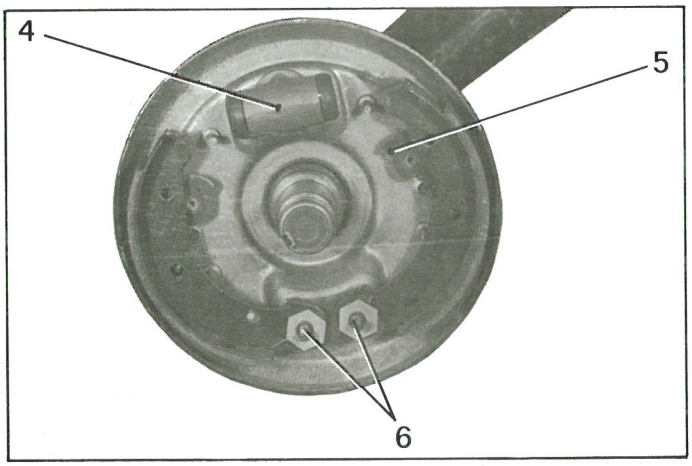

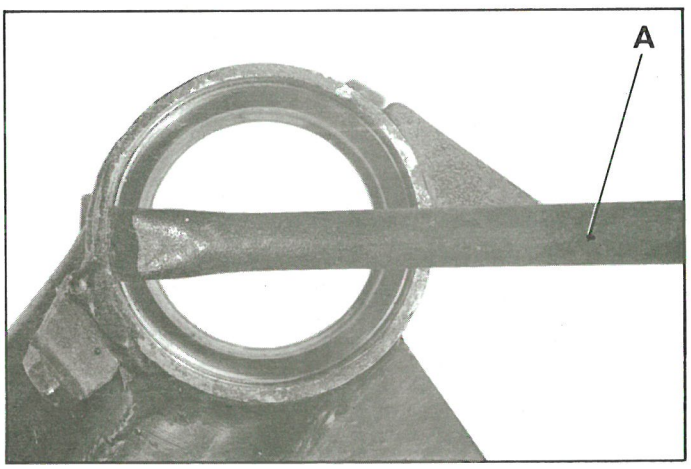

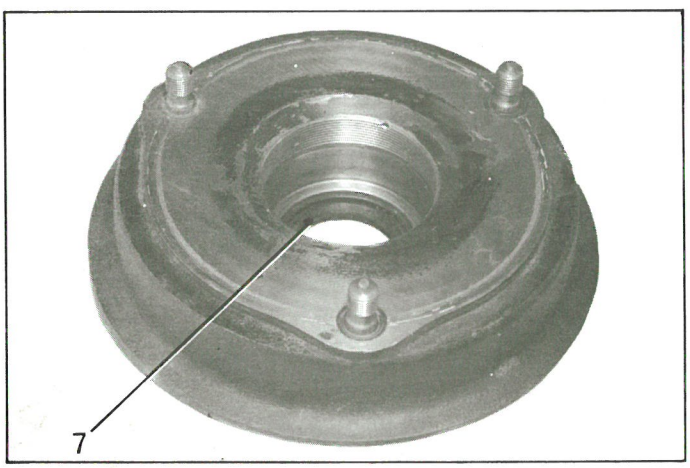

NOTE : The inner race of the bearing may remain on the stub axle. Extract this race by using extractor 1813-T or puller with extractor tool 2405-T.

3. Remove the shock absorber spindle.

4. **Remove the brake shoes :**

a) Remove the retaining caps for the thrust spring. Use tool 3556-T to compress the spring. To free the caps turn them one-quarter of a turn.
Free the two guide stems.

b) Using grips, remove the return spring.

NOTE ; From September 1968 free the return spring (1) with a screwdriver.

c) Remove the nuts (3) from the brake shoe anchor pins.

d) Free the flat or double locking washers (2), the brake shoes and the eccentrics (6) from the shoes.

5. Remove the wheel cylinder (4).

6. Remove the rivet and drive out the adjusting cams (5) (if necessary).

7. **Check (if necessary) the axle arm :**
(see chapter II)

8. **Strip the axle arm :**

Using a square edged drift A drive out the outer bearing races from the hub of the arm.

9. **Strip the hub brake drum :**

Drive out :

- the bearing,
- the oil seal (7).

10. **Strip the wheel cylinder :**

(see relevant operation).

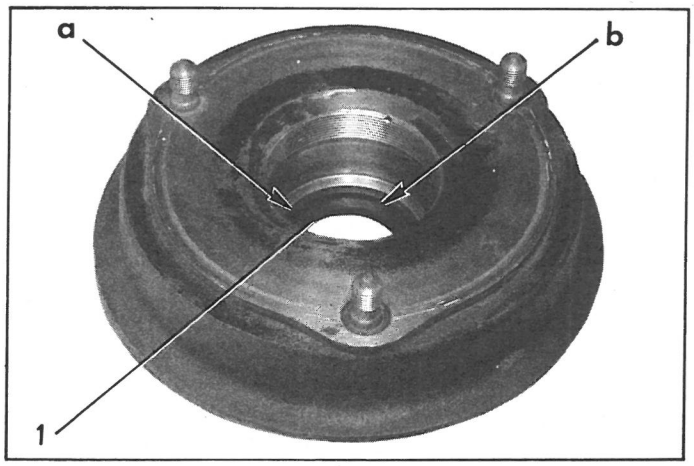

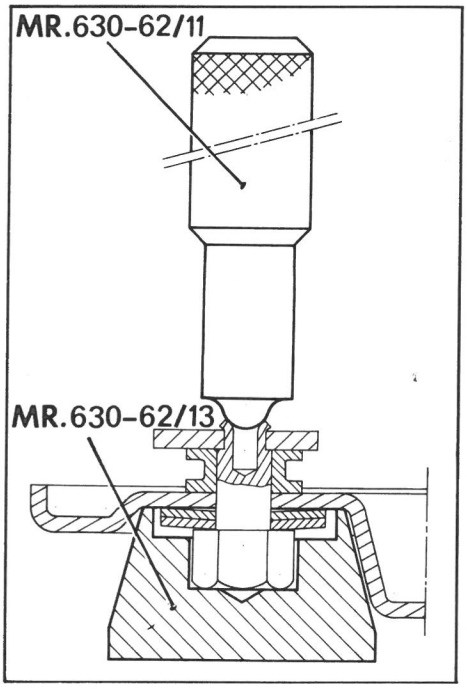

FITTING

11. Prepare the wheel cylinder :
(See relevant operation).

12. Replace the wheel studs :
(See relevant operation).

13. Prepare the hub drum :

a) Grind the shoes on a lathe. Use mandrel MR. 630-35/12 or MR. 630-35/17.

The out-of-round tolerance is 0.1 mm (check with a dial gauge).
Do not increase the original diameter of 180 mm by more than 2 mm.

b) Position the oil seal (1) with the lip of the ring towards the bearing. The surface « b » of the seal should stand down below by $1\ ^{+0.5}_{0}$ mm from shoulder « a » of bearing support face so that the latter does not rub against the seal.

c) Check the bearing. Secure the two inner races against each other using a bolt and two washers.

d) Fit the bearing : grease (TOTAL MULTIS) and insert it in the bore of the hub using a press and a tube resting on the outer race :
- tube dia. outside 75.5 mm
  dia. inside 72 mm
  length 100 mm

14. Prepare the axle arm and the brake backplate :

IMPORTANT :

1°) An S.K.F. roller bearing cage must never be fitted in a TIMKEN race or vice versa, because the bearing cones are not identical.

2°) Two bearings of different makes can be mounted on the same arm.
a) Position the outer bearing races in the arm bore, using a square edged drifting tool. Ensure that the races are correctly seated. Do not interchange the outer bearing races.
b) Fit the adjusting cams and crimp the pins. Use fixture MR. 630-62/13 with rivetting snap MR. 630-62/11.

15. Fit the wheel cylinder (Shakeproof washer).

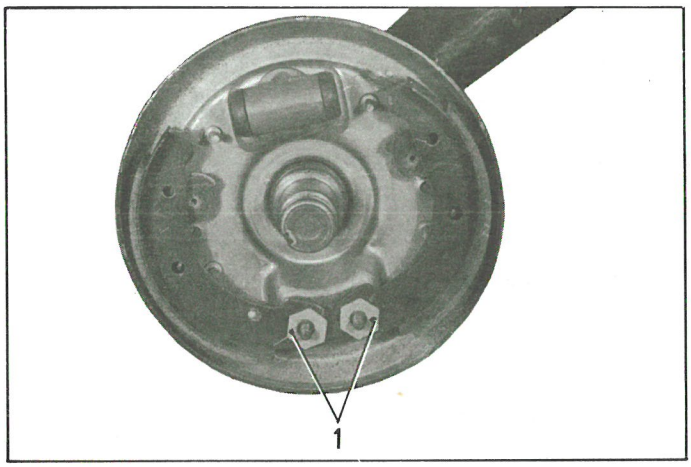

16. Fit the brake shoes :

Lightly oil the adjusting eccentrics (1) and position them in the brake shoes.

The brake linings should be thoroughly dry, in good condition and free from oil patches. If not, renew the brake shoes.

Set the cams in their lowest position.

Offer up the brake shoes on the brake backplate.

Fit, at the front, the shoe with the free part uppermost.

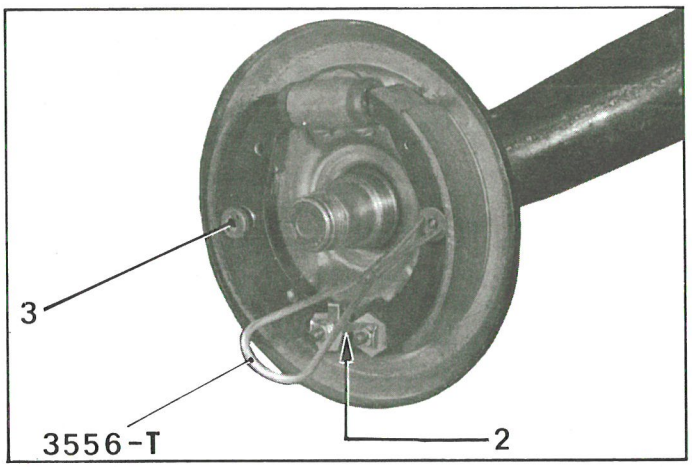

Place in position the flat or the double lock-washers (2) on the eccentric pins and provisionally tighten the nuts (5). Fit the guide stems, the bearings springs and the caps (3) locking them on the stems with tool 3556-T.

Ensure that the shoes move freely.

Hook up the shoe return spring (4) :

NOTE :

On vehicles built from September 1968 : the double lockwasher (2) for the eccentric locking nuts; also functions as a return spring guide and must be renewed after each dismantling.

The spring is fitted by hand.

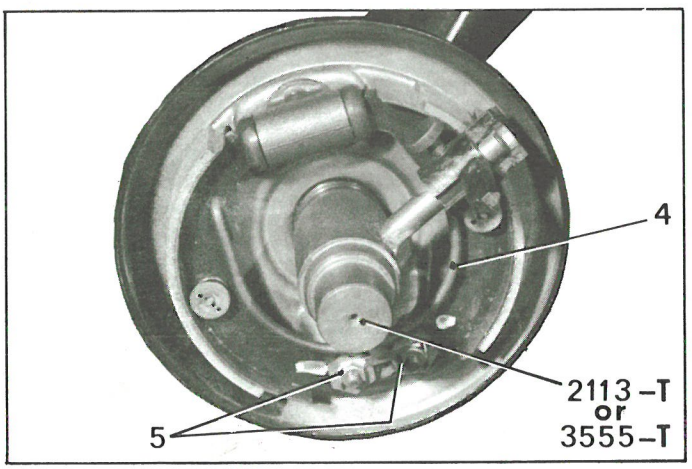

17. Centre the brake shoes :

Use tool 2113-T or 3555-T.

Tighten eccentric nuts (5) moderately and lock them.

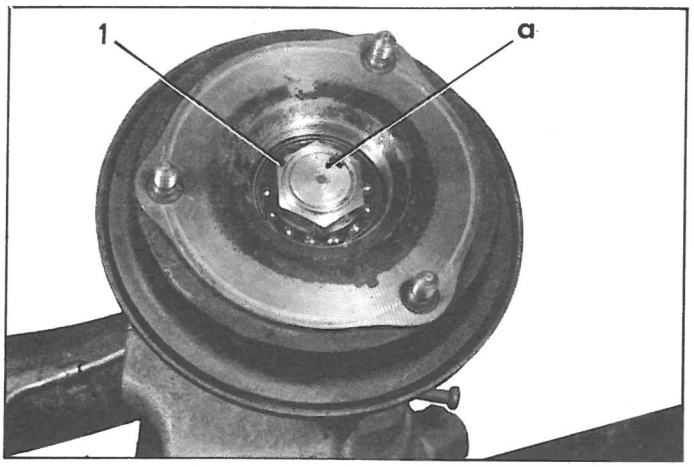

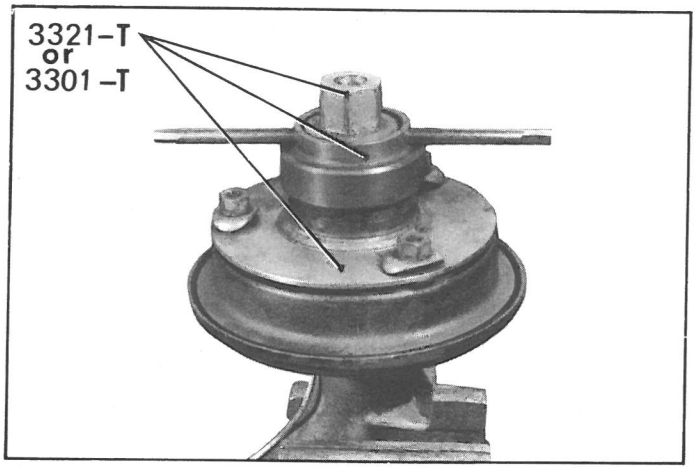

18. Fit the brake drum :

a) Place in position the drum on the stub axle. Use a tube pressing on the inner bearing race :
- tube dia. inside 36.5 mm
  dia. outside 44 mm
  length 200 mm

b) Fit the nut (1). *This nut must be renewed after each intervention.* Tighten the nut to between 350 and 400 mΛN (35 to 40 m.kg) *(face and threads greased).* Using a mallet, fold over the collar of the nut into the countersunk portion of the stub axle at point « a ».

c) Pack the metal cap of the ring nut with grease (TOTAL MULTIS).
Tighten the ring nut. Use tool assembly 3301-T or 3321-T and end-piece 3303-T or 3304-T. Set the guide plate on the three wheel studs. Lock the drum by separating the brake shoes with the adjusting cams or by using tool MR. 630-64/40. Tighten the ring nut to between 350 and 400 mΛN (35 to 40 m.kg) (face and threads greased) and lock the ring nut with two centre punch marks. Adjust the brake shoes.

19. Fit the shock absorber spindle on the axle arm (if necessary).
Tighten to between 190 and 210 mΛN (19 to 21 m.kg).

20. Fit the inertia damper (if necessary).
Tighten the nuts to 60 mΛN (6 m.kg).

II. REPLACING AN ARM STOP

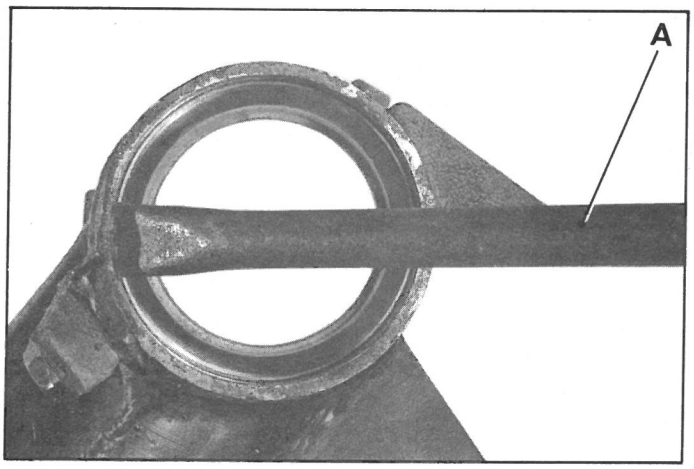

1. Remove the arm
(See relevant operation)

2. Replace the arm stop :

Free the outer bearing race using a square edged drift A.
Drift off and grind away weld traces of former stop.
Weld the new stop in position as shown opposite. Use electric welding and protect the arm with damp asbestos, in order to avoid all risk of distortion of the bearing bore.

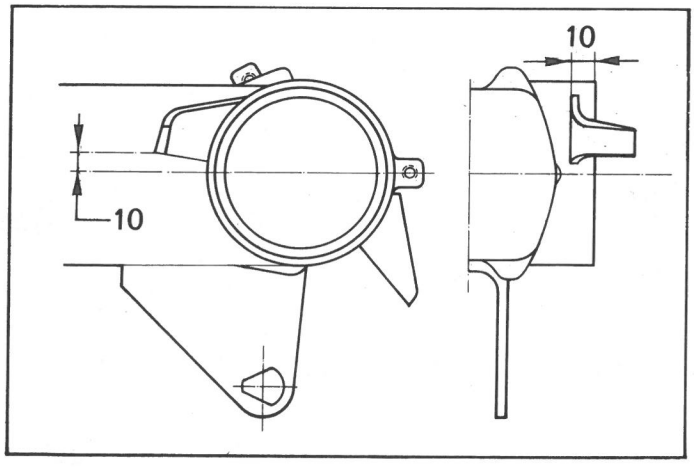

3. Fit the outer bearing race. Check that the race is correctly seated.

III. CHECKING A REAR AXLE ARM, REMOVED

1. Strip the arm *(See chapter I).*
NOTE : To check the arm, it is not necessary to remove the brake shoe adjusting cams.

2. Prepare the checking apparatus :
Place in position the arm on the checking fixture (fixture MR. 630-51/46).
Fit the stub axle in the bore in the plate E and place the plate on a surface plate.
Insert the mandrel A in the bore of the hub.
Raise the arm until the plate E rests squarely on the surface plate and wedge the arm in position.

3. Check the toe-in (see fig. 1)
a) Set the sloping rod B of the mandrel A in *the plane of the* line of welding of the arm.
b) Using a scriber, measure the height « h1 » at one point at the end of the rod; rotate the mandrel half a turn and measure the height « h2 » *at this same point.*
The difference between these two heights should be between 0 and 1.2 mm overall and the smaller of these two heights may be found either on the stub axle centre line side or on the arm centre line side.

4. Check the camber (see fig. 2) :

a) Set the rod B of the mandrel A *perpendicular* to the line of welding of the arm.

b) Using a scriber, measure height « h3 » at a point of the rod, pivot the madrel half a turn and again measure the height « h4 » at this same point.

The difference between these two heights should lie between 0 and 3.5 mm. The smaller of the two height dimensions should always be found on the side of the knife-carrying plate. If not, the arm must be renewed.

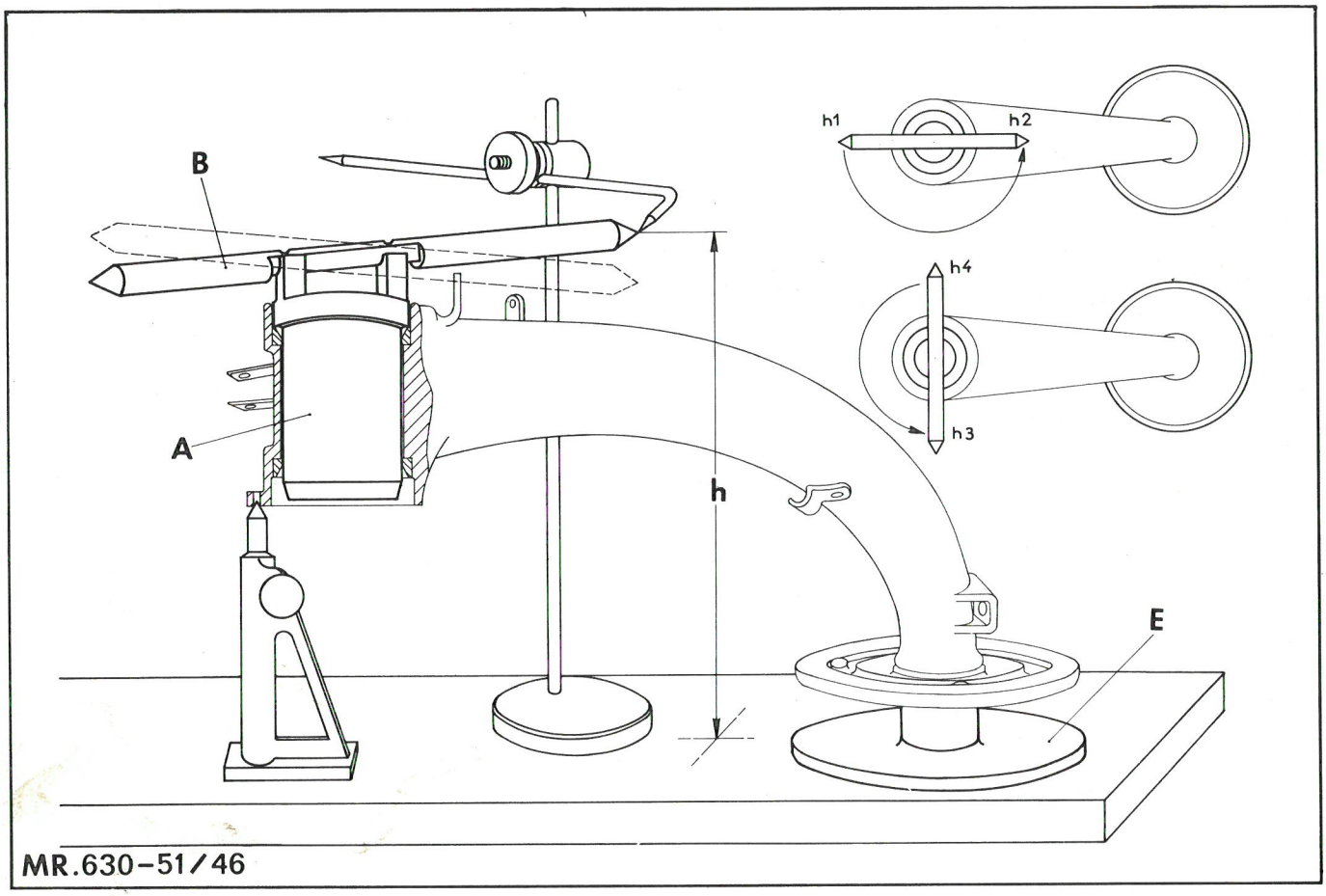

IV. REPLACING THE WHEEL STUDS

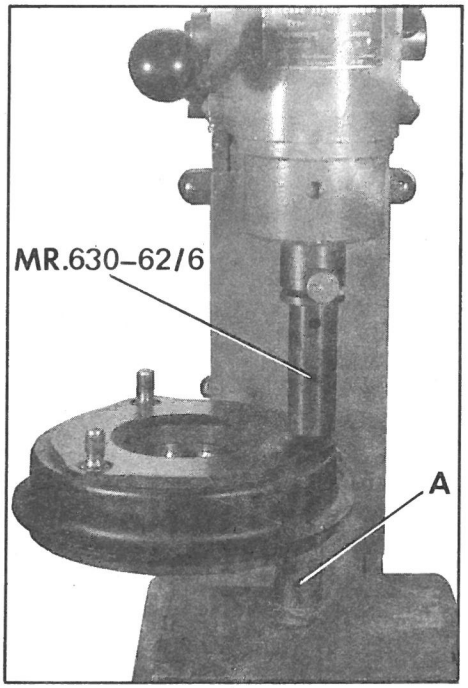

NOTE :

To replace the wheel studs, never separate the brake drum from the hub. Only replace one stud at a time.

Grinding the drum is carried out at the factory when both parts are assembled.

Replacing the wheel studs :

Drive out one wheel stud and crimp the new stud using a press ramming tool A and the rivetting snap MR. 630-62/6.

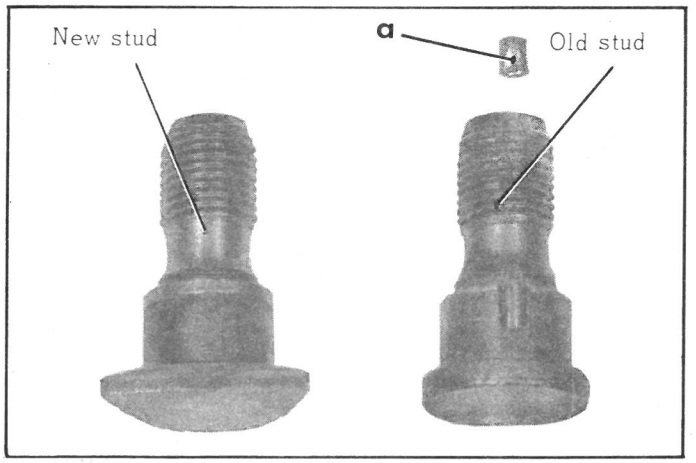

NOTE :

The Replacement Parts Department now only supply the new wheel stud.
(Anti rotation peg « a » has been discontinued)

OVERHAULING A SUSPENSION UNIT

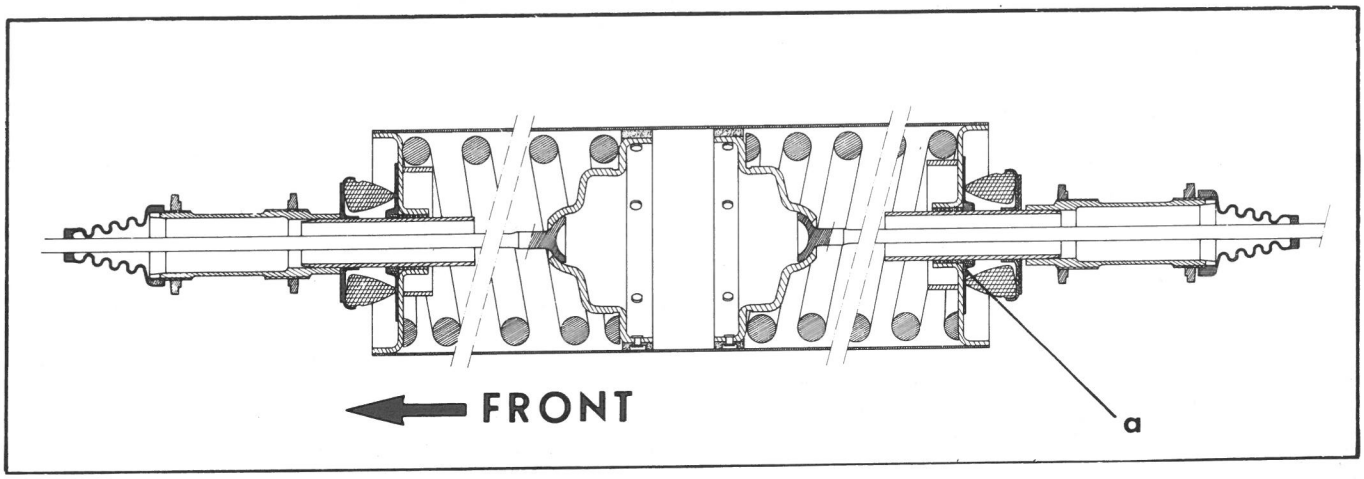

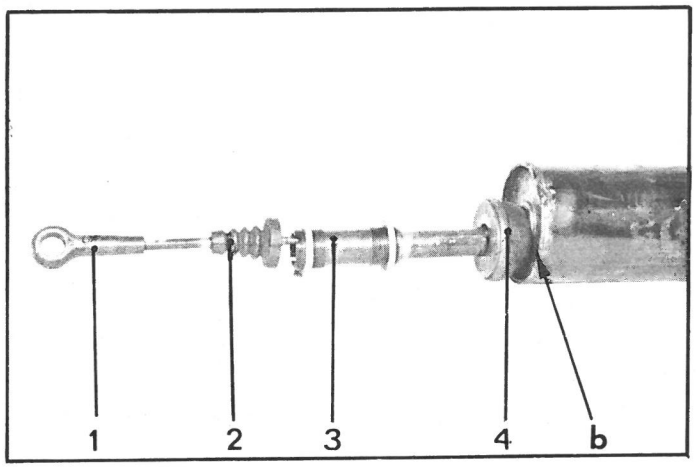

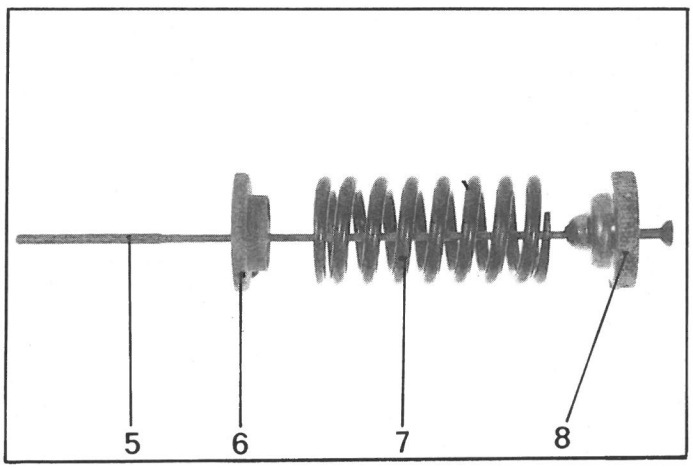

REMOVAL

1. Unscrew the knife-edge end-pieces (1) from the front and rear tie-rods.

   Free :
   - the duct covers (2),
   - the adjustable end-piece (3),
   - the two rubber suspension buffers (4).

2. Using a scriber, mark the angular position of the front closing cup of the housing in relation to the latter.

   Remove, *for preference by grinding*, the weld seam at point « b » securing the closing cup on the cylinder housing. (If milling is not possible hold pot in vice, tightening moderately, and saw weld seam).

3. Free the assembly :
   - front tie-rod (5),
   - front closing cup (6),
   - front suspension spring (7),
   - compression cup (8).

4. Free the assembly :
   - rear tie rod,
   - compression cup,
   - rear suspension spring.

   Remove, if necessary, the felt joints and the bronze bushes at « a ».

5. Clean all the parts.

6. **Prepare the closing cups :**

   If bushes at « a » are to be replaced, soak the new bushes in mineral oil for approximately 24 hours.

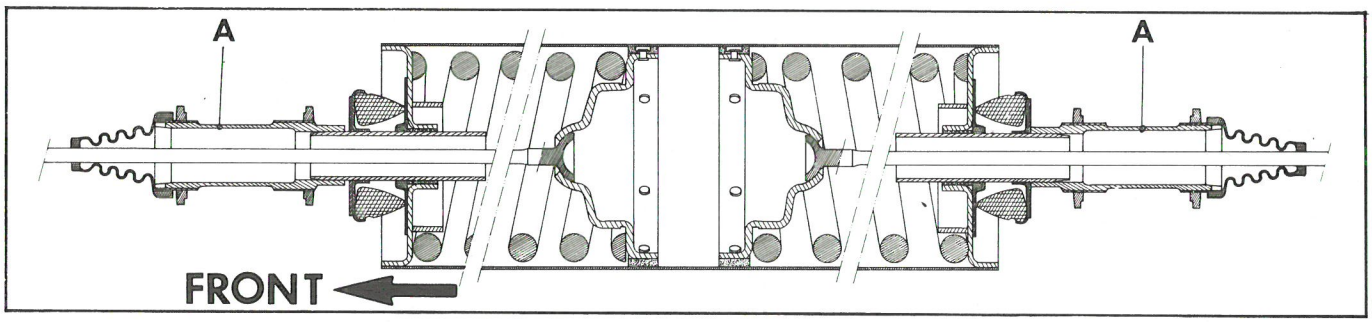

Suspension units fitted on AZ and AZU vehicles :

VEHICLE TYPE	Length of springs decompressed and ϕ of wire (in mm)		Length of tie-rods (in mm)		Length of stub ends (in mm)	
	Front	Rear	Front	Rear	Front	Rear
AZ 9/1962 → 3/1963 AZU 6/1955 → 3/1963	185 14.35	170 15.25	623	644	191	173
AZ, AZU } 3/1963 → 9/1965	185 14.8	170 15.25	600	644	173	173
AZ 9/1965 → 2/1970 AZU 9/1965 → 9/1972 AZ (2 CV 4), AZ (2 CV 6) } 2/1970 → 10/1971	185 14.8	170 15.25	600	642	173	182
AZ (2 CV 4), AZ (2 CV 6) } 10/1971 → 9/1972	193 15.25	170 15.25	600	642	173	182
AZU 9/1972 →	193 15.25	170 15.25	593	611	173	182
AZ (2 CV 4), AZ (2 CV 6) } 9/1972 →	193 15.25	170 15.25	593	632	173	182

Suspension units fitted on DYANE vehicles - DYANE 4 and DYANE 6 :

AYA 8/1967 → 3/1968 AYA 2 3/1968 → 10/1968 AYA 3 1/1968 → 10/1968 AYB 10/1968 → 12/1968	185 14.8	170 15.25	600	642	173	182
AYA 2 10/1968 → AYB 12/1968 → 9/1972	193 15.25	170 15.25	600	642	173	182
AYA, AYB } 9/1972 →	193 15.25	170 15.25	593	632	173	182

Suspension units fitted on AK vehicles :

AK All Types 9/1962 → 5/1968 5/1968 → 7/1976	225 192 17.15	238 17.95	642	618 600	197	197

Suspension units fitted on AM vehicles :

AM → 3/1969	192 17.25	205 17.25	623	623	197	197
AMB → 6/1972	195 18.2	243 19	623	644	197	197
AM 3/1969 → 6/1972	160 18.2	222 18.65	605	623	197	197
AM 6/1972 → 7/1976	160 18.2	222 18.65	575	611	197	197
AMB 6/1972 → 7/1976	160 18.2	222 18.65	611	632	197	197

* **Suspensions without interaction :**

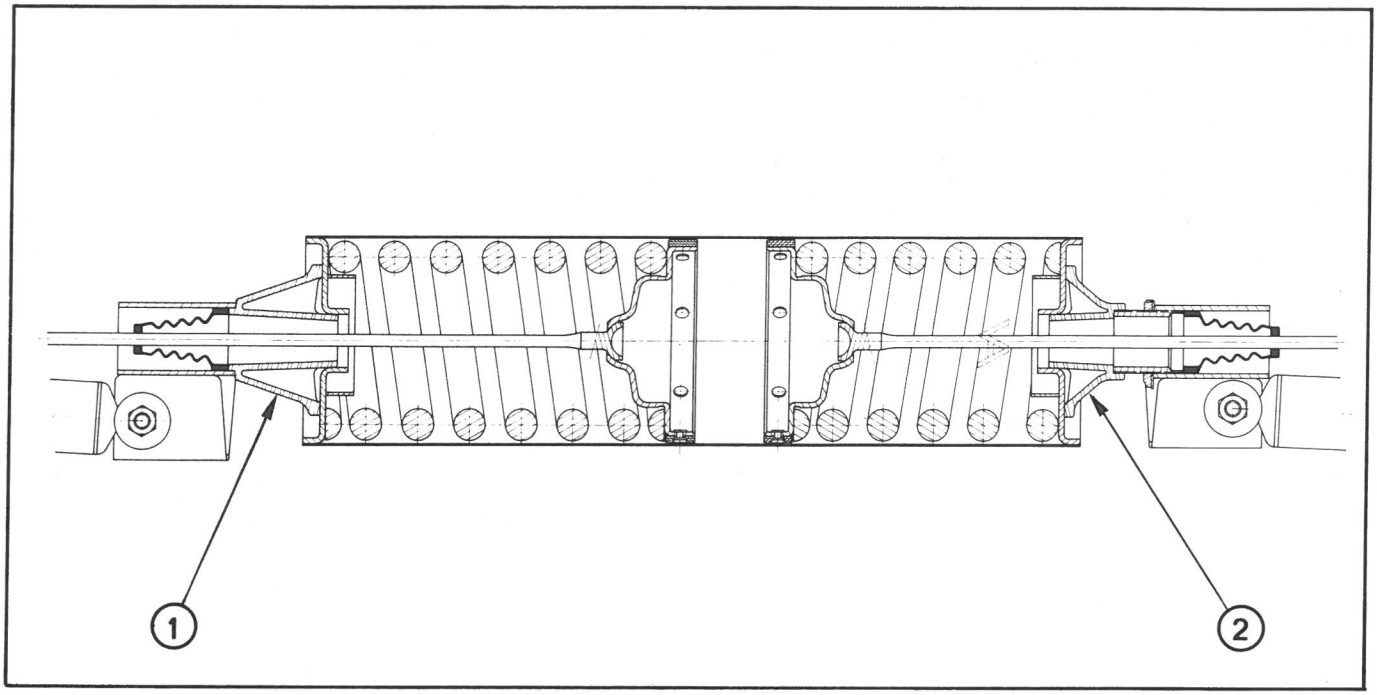

VEHICLE TYPE	Length of springs decompressed (in mm)		Length of tie-rods (in mm)	
	Front	Rear	Front	Rear
Suspension units fitted on AM vehicles :				
AM 3 7/1976 ⟶	172 18	210.45 17.95	590	608
AMF 3 / AMC 3 } 7/1976 ⟶	172 18	239.7 18.65	575	629
Suspension units fitted on AK vehicles :				
AK 7/1976 ⟶	168 17.15	260 17.15	575	608
Suspension units fitted on AYCD (ACADIANE) vehicles :				
	168 17.15	260 17.15	590	792

* The suspension unit is secured by positioning two spacers (1) and (2) between the unit and the brackets on sidemembers.

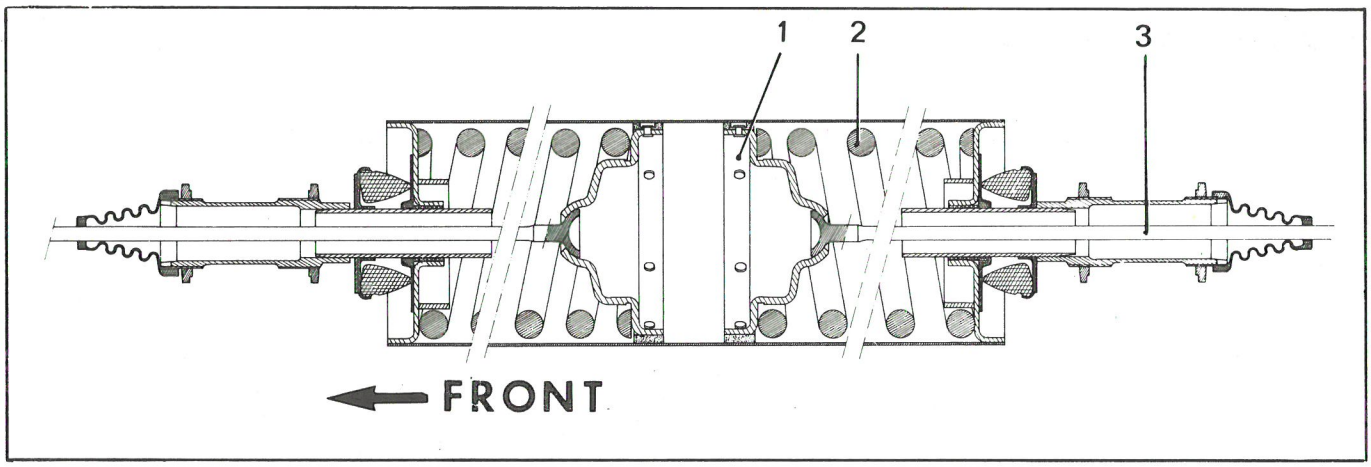

PL. 576

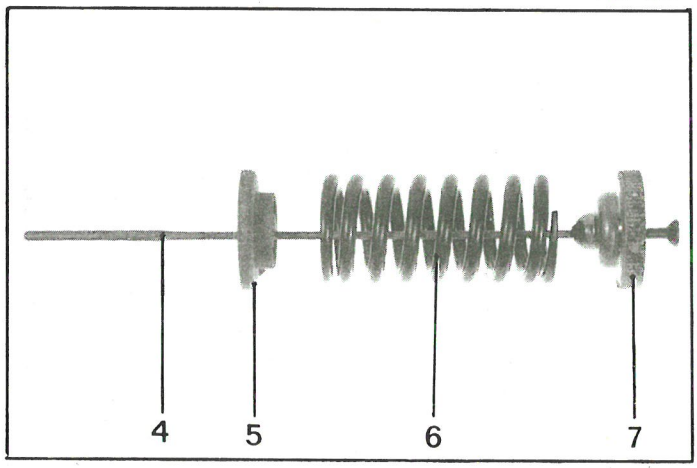

7. Prepare the suspension springs :

As the spring test loadings are very high and checking the springs requires a very complicated testing apparatus, check should be limited to the verification of the wire diameter, the direction of the spiral winding and the height uncompressed (see table).

8. Prepare the suspension cylinder :

Smear the interior using only castor oil.

9. Prepare the compression cups (1) :

Impregnate them with castor oil by immersion in a bath at an ambient temperature of workshop for 15 minutes, then leave them to drip.

10. Prepare the tie rods :

Identification (see table).
Grease the balls ends (TOTAL MULTIS grease).

11. Fit the suspension cylinder :

a) Place in position in the casing :
- the rear suspension spring (2), *(right-hand spiral winding).*
- the compression cup (1),
- the rear tie-rod (3).

b) Place on the front tie-rod (4) :
- the compression cup (7),
- the front suspension spring (6) *(left-hand spiral winding).*
- the front closing cup (5).

Insert the assembly in the casing.

PL. 51

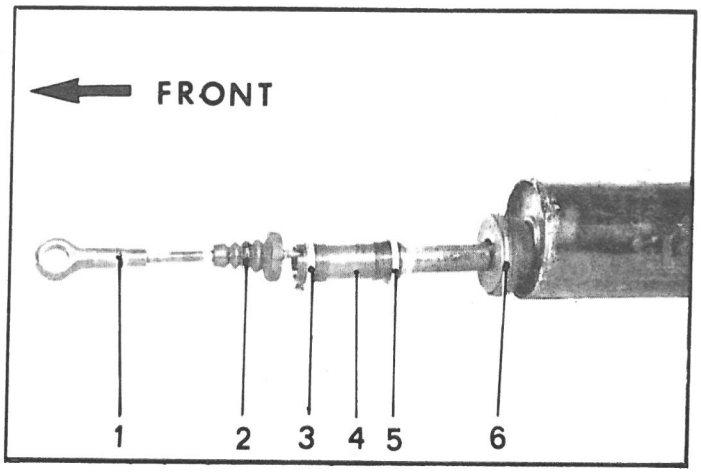

12. Weld the front closing cup :

a) Locate the cup in position marked when removing.
Ensure that the cap is perpendicular to the centre line of the casing.

b) Arc weld or if not possible, weld with a blow torch.

13. Assemble the suspension unit :

Position in succession :

a) On the front tie-rod :
- the rubber suspension buffer (6),
- the nut (5),
- the adjustable end-piece (4) (see table) fitted with the nut (3),
- the dust cover (2),
- the end-piece (1) for carrying the knife edged pin

PL. 51

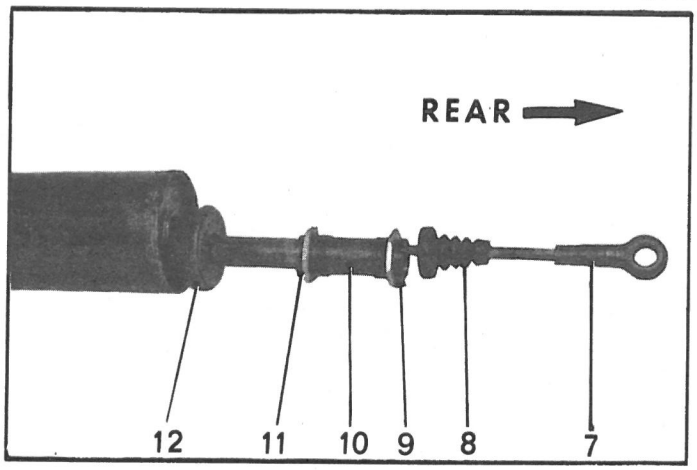

b) On the rear tie-rod :
- the rubber suspension buffer (12),
- the nut (11),
- the adjustable end-piece (10) (see table) fitted with the nut (9),
- the dust cover (8),
- the end-piece (7) carrying the knife edged pin.

OVERHAULING A STEERING UNIT

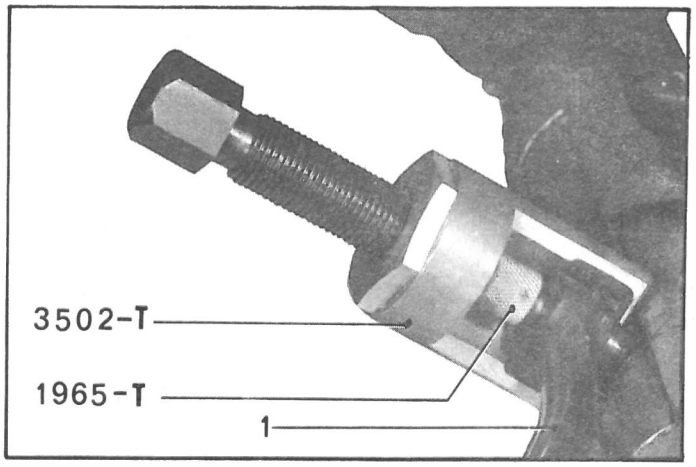

NOTE : As the steering unit is fitted on the axle crossmember it cannot be dismantled independently When overhauling it the front axle-steering assembly must be dismantled.
(See relevant operation).

REMOVAL

1. Place the front axle steering unit assembly on a support (support MR. 630-41/4.

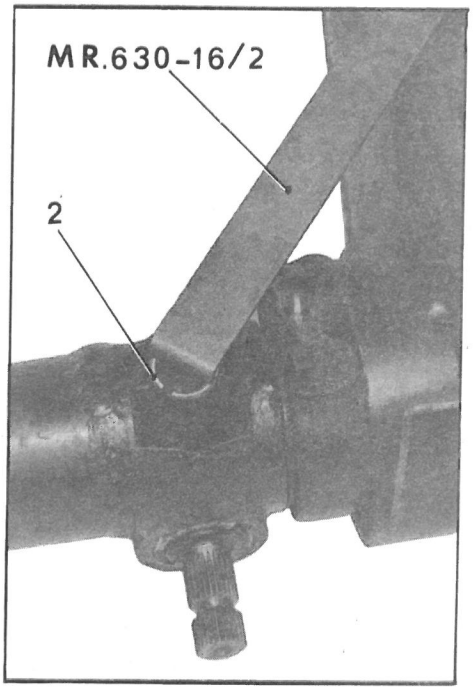

2. Disconnect the track rods (1) from the rack ball pins (use extractor 3502-T and bead 1965-T).

Cut and free the anti-rattle plate in order to fit the extractor.

3. Unscrew and remove the nut from the spring guide (spanner MR. 630-16/2).

Free the spring and the guide.

4. Remove the slide (3) from the sliding cover free the moving cover plate (5) and the rack ball guide (4).

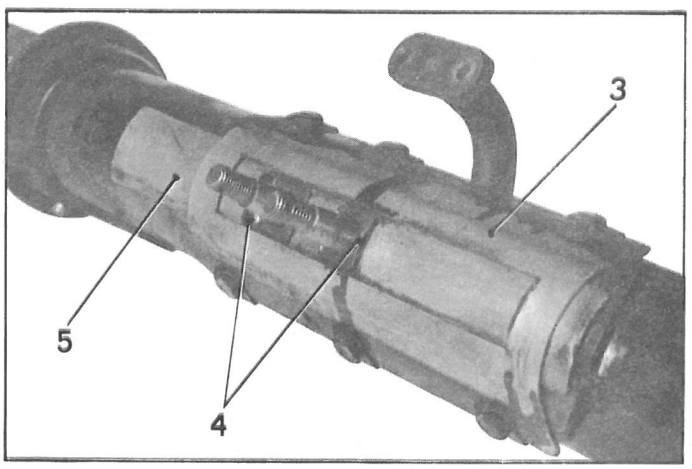

5. Free the assembly rack and tube from the axle crossmember.

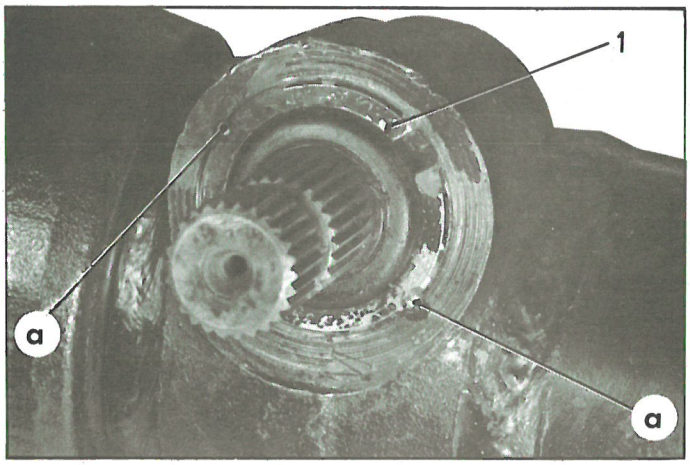

6. Remove the rack pinion :

Remove the nut (1) locking the rack pinion. Free it carefully, using a drill 4 mm in dia. to drill out the punch marks « a » locking the nut, then remove the nut (spanner 3503-T).

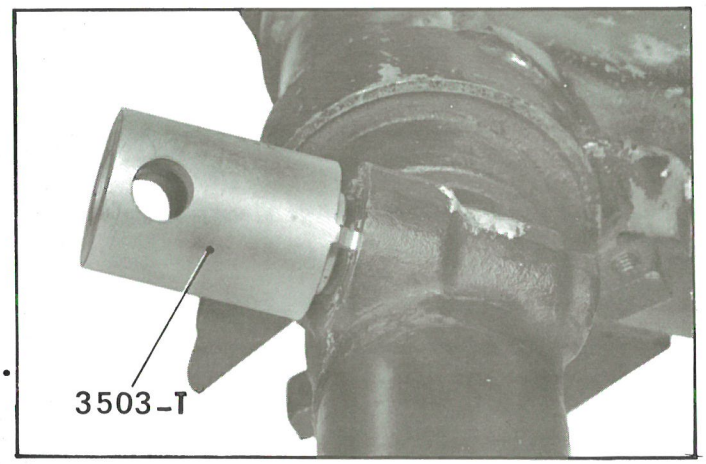

Free the rack control pinion from the housing.

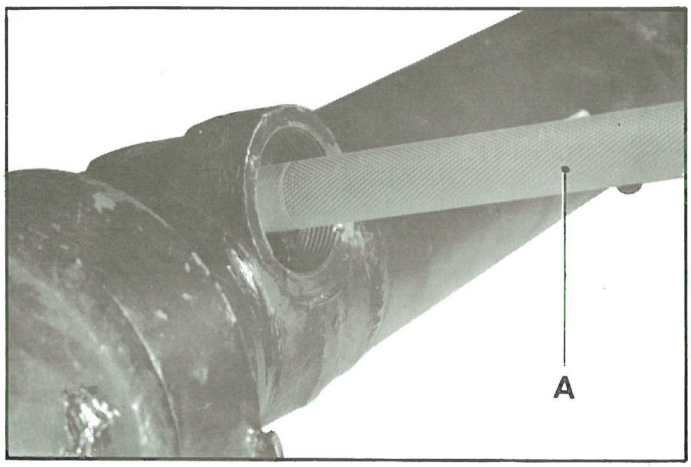

7. Drive out the bearing bush of the rack pinion, using a shouldered mandrel A inserted through the inside of the housing.

Mandrel :

- small diameter 13 mm, length 20 mm
- lage diameter 17 mm, length 130 mm.

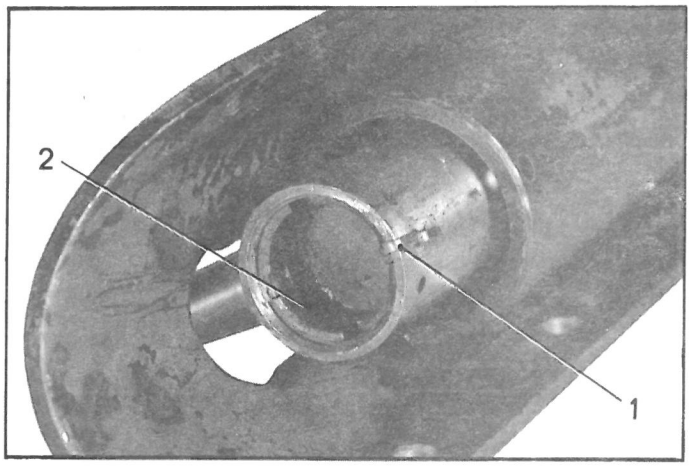

8. Remove the split pin (1) and unscrew the nut from the ball stop (2) (spanner MR. 630-16/ 2).

9. Position the rack tube (5) with its ball pins in guide (3) as indicated opposite.
Push the seat (9) for rack ball pin with ball pin (4) to free the latter from the rack tube.

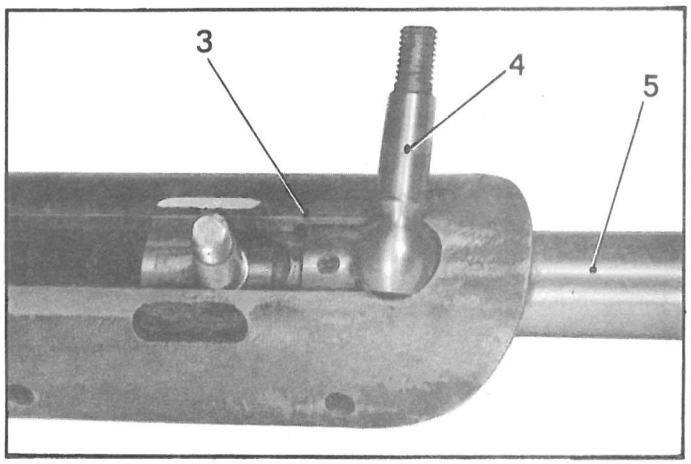

10. Free the rack tube from the guide plate (3) for rack ball pins.

Free :
- the ball pin (13),
- the ball seat (12),
- the second ball seat (11),
- the spring (6) and its distance piece (10),
- the third ball seat (9),
- the fourth ball seat (8),
- the distance piece (7), from the rack tube.

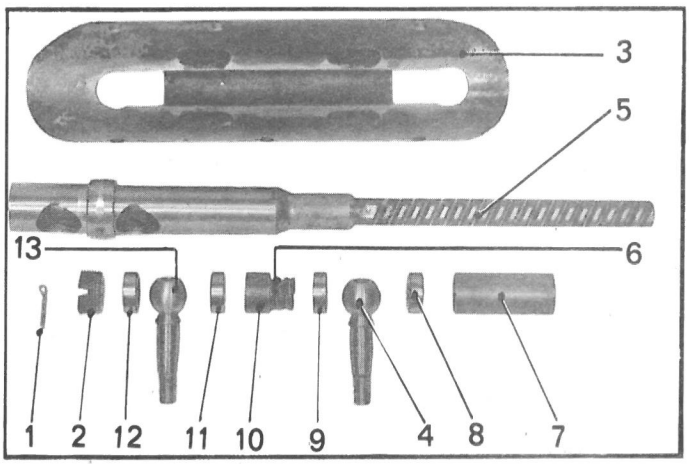

11. Clean all the parts.

ASSEMBLY.

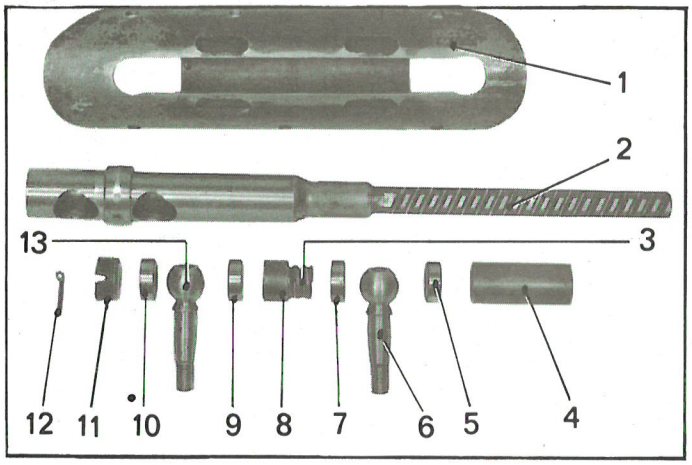

12. Smear with grease (TOTAL MULTIS) the inside of the ball pin guide, the holes in the four ball pin seats (5), (7), (9) and (10), the inside of the spring (3), and the inside of the rack tube and the balls pins.

13. Position inside the rack tube (2) :
- the distance piece (4),
- the first seat (5),
- the second seat (7),
- the spring (3) and its distance piece (8),
- the third seat (9),
- the ball pin (13).

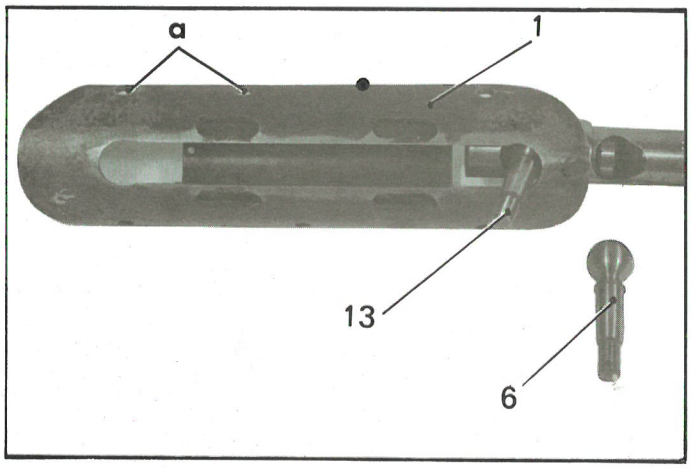

14. Offer up the rack tube thus equipped in the ball pin guide (1) as indicated opposite, i.e. : with the two nearest holes « a », opposite the rack.

Fit the second ball pin (6) and the fourth seat (10).

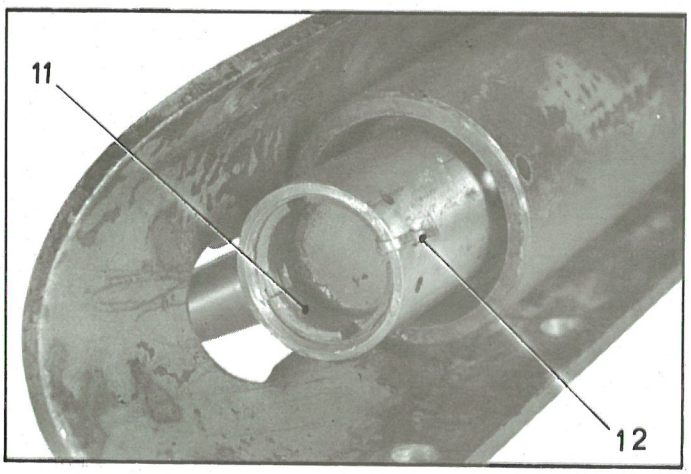

15. Screw on and lock the thrust nut (1) for the ball pin (spanner MR. 630-16/ 2), then unscrew 1/6 th of a turn.

Ensure that the ball pins turn without clearance or stiffness.

Lock the nut with a split pin inserted in the hole nearest to the slot with the head of the pin (12) located in the slot. Correctly flatten the ends of the split pin on the rack tube so that they do not rub on the ball pin guide.

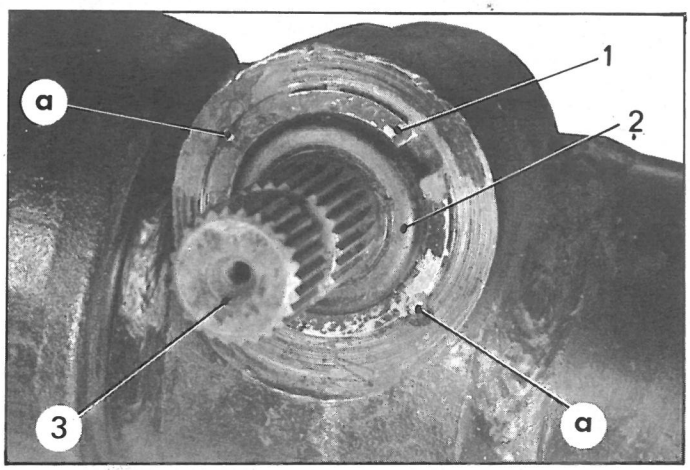

16. Position the rack pinion bearing bush in its housing, using a shouldered mandrel A.

Mandrel :
- small diameter 13 mm, length 20 mm
- large diameter 17 mm, length 130 mm

Position the expanding washer in the recess in the housing and fix it by flattening with a hammer.

Pack the bush with grease (TOTAL MULTIS).

17. Smear with grease (TOTAL MULTIS) the rack, and the ball pin guide position them in the axle crossmember.

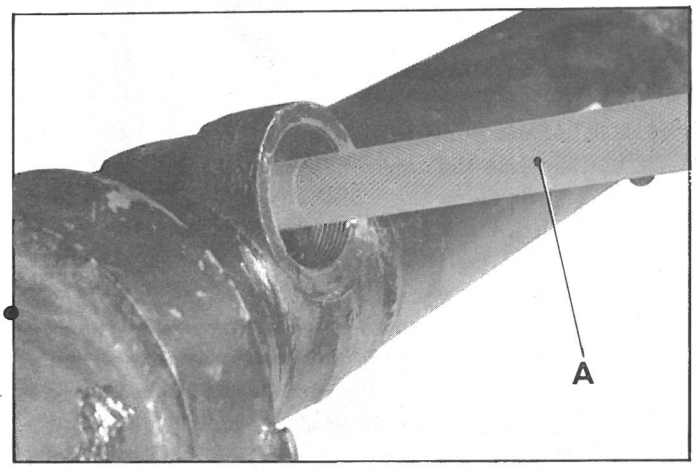

18. **Fit the rack pinion :**

Smear with grease (TOTAL MULTIS) the bearing of the rack pinion and the teeth of the pinion. Grease the bush end of the pinion with flake graphite (Belleville type grease).

Position the pinion (3) in the housing. Tighten the nut (1) with its felt ring (2) using spanner 3503-T. Tighten to between 100 and 140 mΛN (10 to 14 m.kg).

Lock the nut with two diametrically opposed centre punch marks at points « a ».

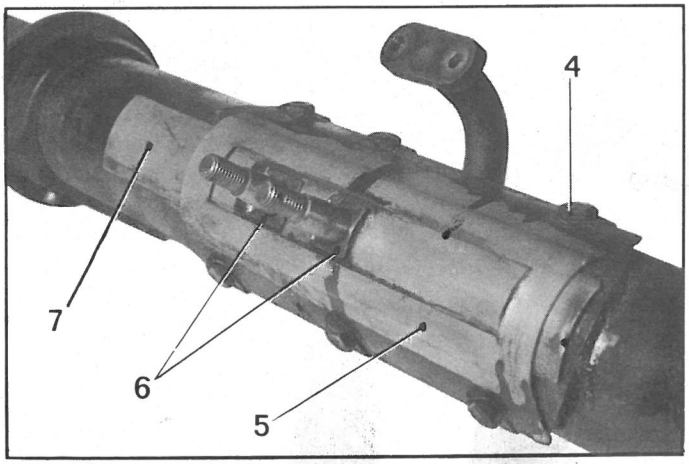

19. Position the guide blocks (6) on the ball pin stems.

Grease and position mobile shield (7). Fit shield slideway (5), lock tabs, then screws (4). Tighten screws and ensure that rack moves freely in axle transverse member.

Turn over the lockwashers.

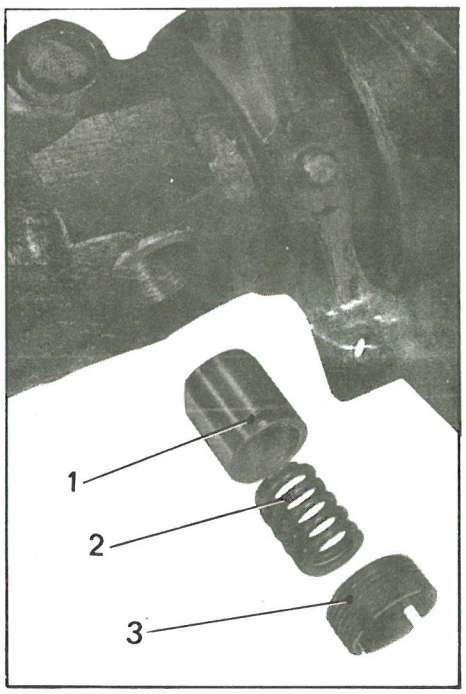

20. Grease the guide (1) and fit it in position in its guide.
Position the spring (2) and screw the nut (3). temporarily (using spanner MR. 630-16/ 2).

21. Fit the steering column temporarily on the rack pinion.

22. Turn the steering wheel (about two and a half turns) so that the rack travels to its fullest extent.
Gradually tighten the nut (3), feeling for a hard point : at this point, if it exists, adjust pressure of guide (1) by gradually loosening the nut (3).
The rack should move smoothly without the movement of the teeth being felt.

NOTE : The nut (3) is not locked (the pressure of the spring on the guide is sufficient to prevent it unscrewing).
After adjustment, remove the steering column tube.

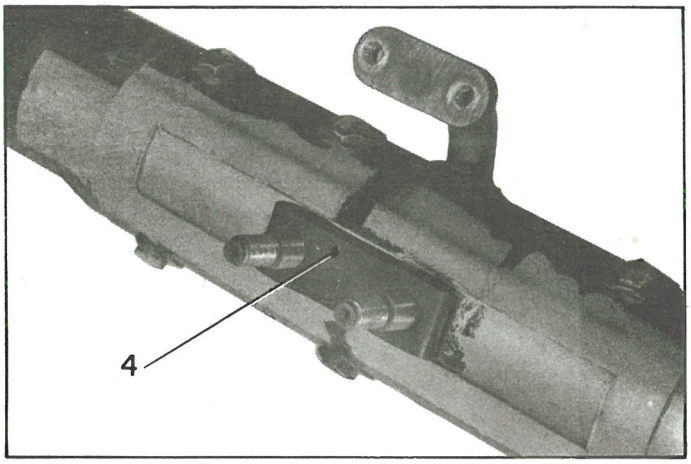

23. Fit the track rods :

a) Place in position the anti-rattle plate (4).
b) Degrease the tapers on the ball pins stems and those on the track rods.
Position the track rods on the ball pin stems.
c) Tighten the Nylstop nuts (5) to 40 mΛN (4 m.kg).
To prevent the ball pin from turning with the nylon portion of the nut, when the latter comes into contact with the threads on the ball pin, For this, proceed as follows :
Place a fork shaped distance piece (e.g. flat spanner) between the track rod and the nut.
Tighten the nut to close up the tapers : then free the distance piece and tighten the Nylstop nut to 40 mΛN (4 m.kg).

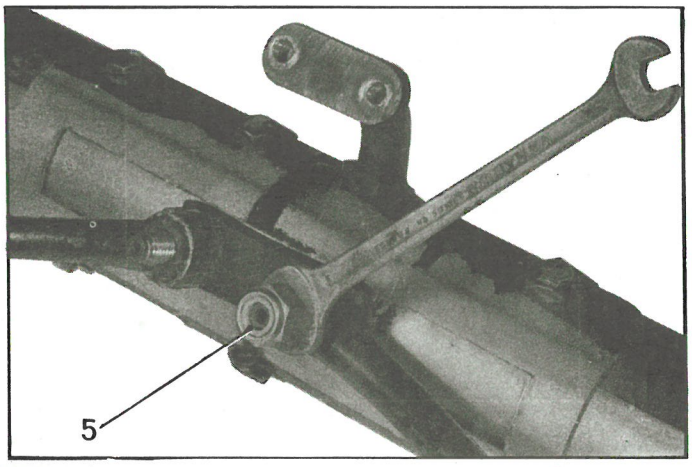

NOTES :

1°) A Nylstop nut must not on any account be fitted to a ball stem which has a pin hole (this type used until May 1965). The hole would damage the nylon ring of nut and destroy its locking action.

2°) Nylstop nuts may be used several times provided that the Nylstop ring is in good condition and that the nut is hard to turn. It should not be possible to screw it by hand.

24. Remove the axle from the stand.

I. OVERHAULING A MASTER CYLINDER

(All types except master cylinders with central re-circulation valve)

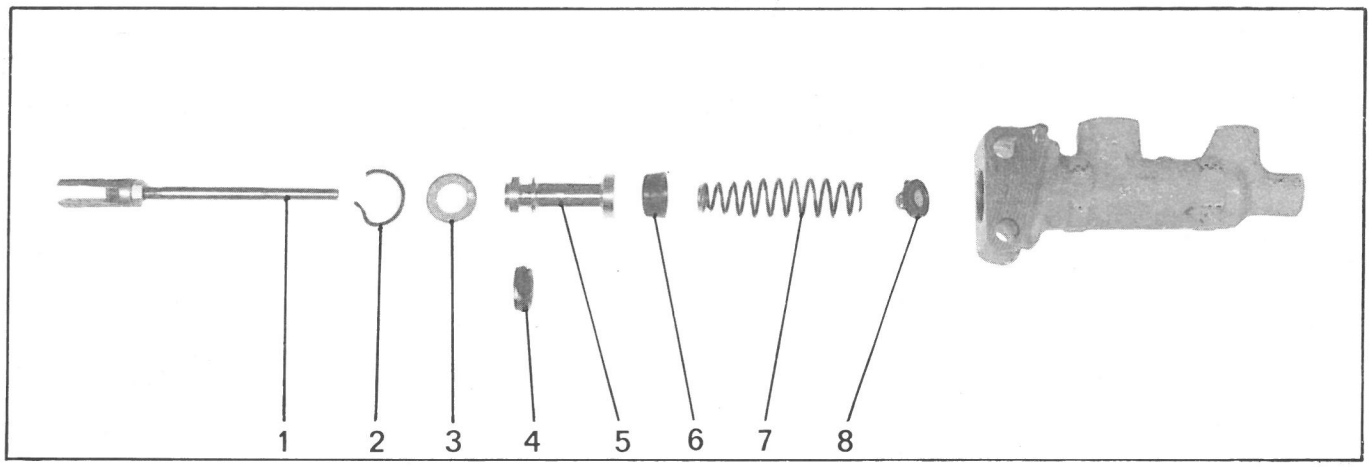

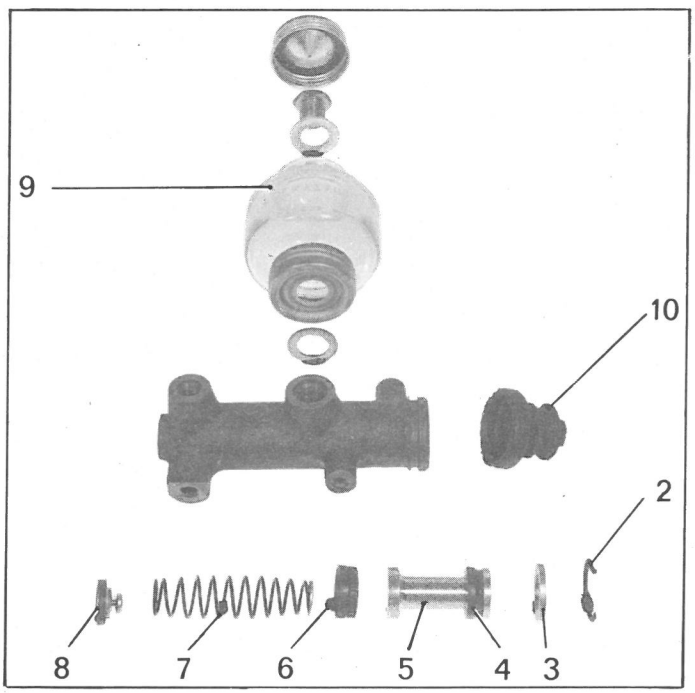

DISMANTLING

NOTE :
When carrying out this operation on the vehicles fitted with pendent pedal gear, the master cylinder assembly must be removed without disconnecting the master cylinder from the pedal.

1. Drain and remove the brake fluid reservoir (9).

2. Free the dust cover (10) *(as applicable)*

3. Remove the locking circlip (2).

4. Remove the split pin and remove *(as applicable)* the spindle from the push-rod (1).
   Disengage the push-rod (1).

5. Free :
   - the thrust washer (3),
   - the piston (5),
   - the cup (6),
   - the spring (7),
   - the valve (8).

   Remove the cup (4) from the piston (5).

6. **Clean all the parts :**

   a) Clean all the parts with alcohol, otherwise use very clean special brake fluid, but no other product.

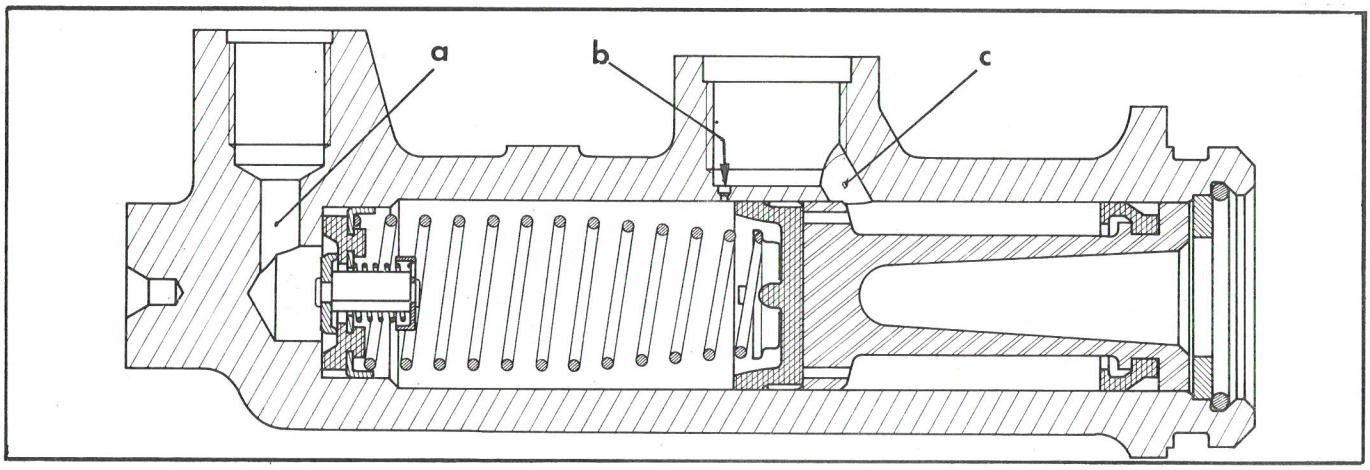

b) The bore of the master cylinder should be free from any traces of rust or scratches.
If not, replace the master cylinder.
Ensure that passageways « a », « b » and « c » are unobstructed.

c) Immerse all the parts in brake fluid before refitting.

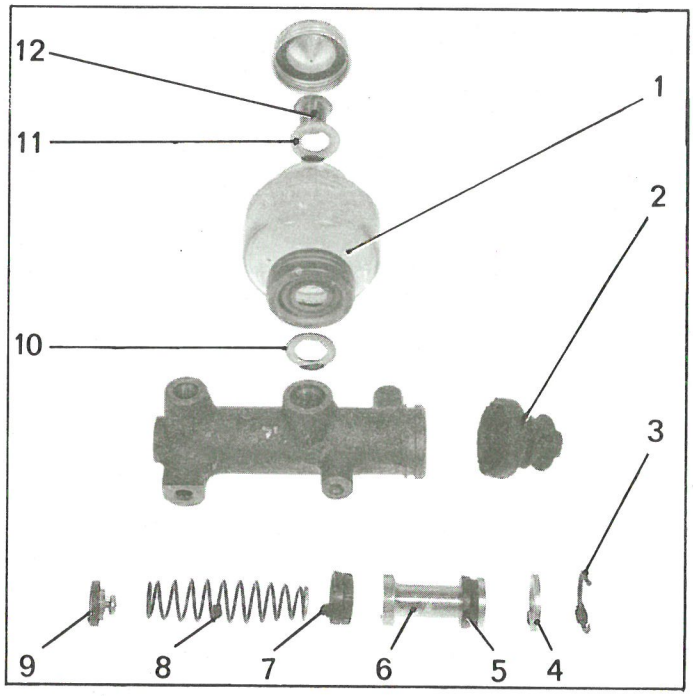

FITTING

7. Insert into the body of the master cylinder :
- the valve (9),
- the spring (8),
- the main cup (7),
- the piston (6) with its cup (5).

Fit the thrust washer (4).
Compress the spring and place the locking circlip (3) in position.

8. Insert the push-rod. Fit and insert split pin in the spindle of the push-rod *(as applicable)*.

9. Fit the brake fluid reservoir (1) on the master cylinder *(Vehicles equipped with non-pendent pedal gear)*.
Fit copper joint (10) between the master cylinder and reservoir, and steel washer (11) between the screw hollow (12) and reservoir.

10. Place in position *(as applicable)* the dust cover (2).

II. OVERHAULING A MASTER CYLINDER WITH CENTRAL RE-CIRCULATION VALVE

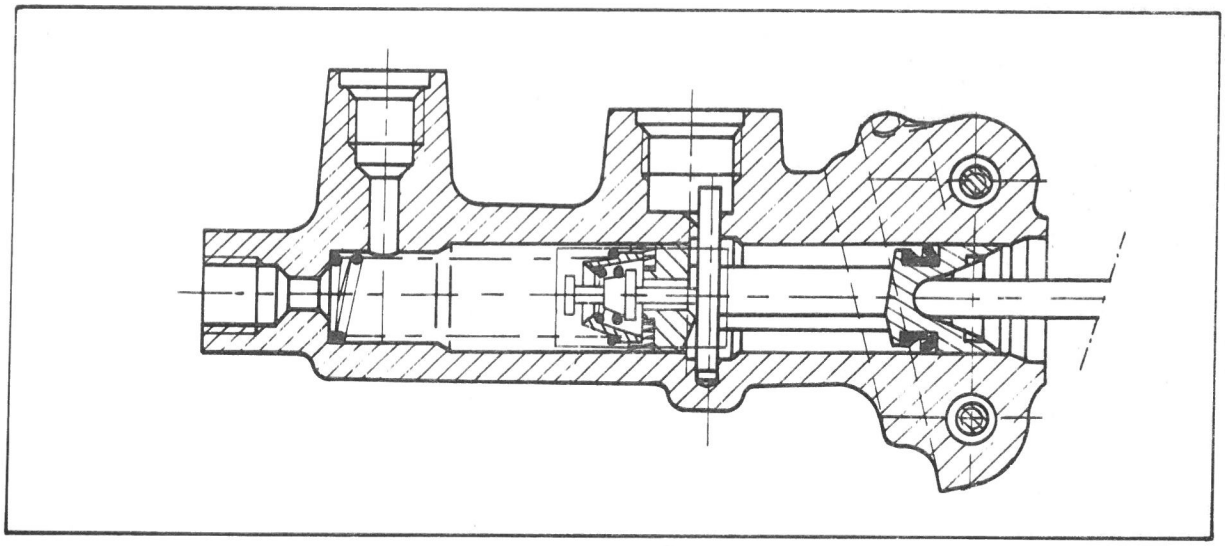

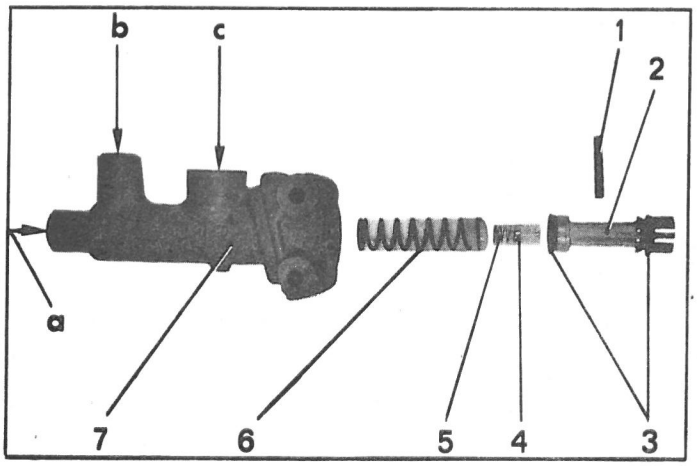

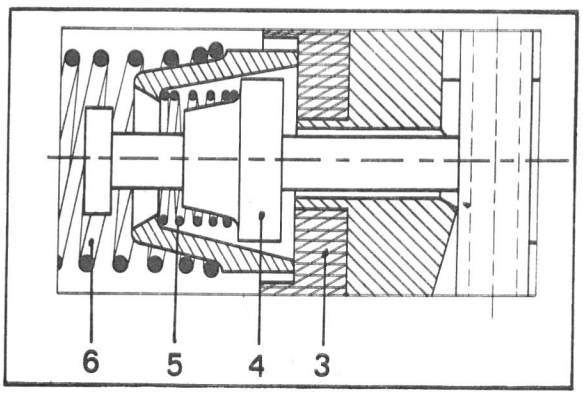

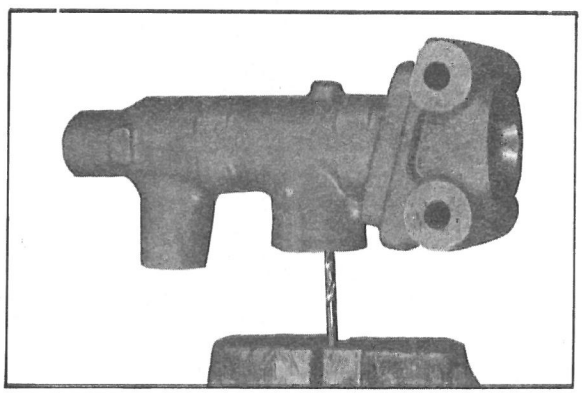

DISMANTLING

1. **Remove the piston locking pin :**
   Take a drill 3 mm in dia.
   Clamp it horizontally in a vice.
   Offer up the master cylinder so that the drill fits into the locking pin (1).
   Turn the master cylinder clockwise and pull it backwards to disengage the split pin.

2. Remove :
   - the piston (2),
   - (the valve (4) and its spring (5),
   - the spring (6).

3. Remove the cups (3), using brass spatulas.

4. **Clean and examine the parts :**

   Clean all the parts with alcohol.
   Otherwise use very clean special brake fluid but no other product. The master cylinder bore should be free of any traces of rust or scratches If not, replace the master cylinder.
   Ensure that the apertures « a », « b » and « c », in the master cylinder are unobstructed.

   Immerse all the parts in brake fluid before fitting.

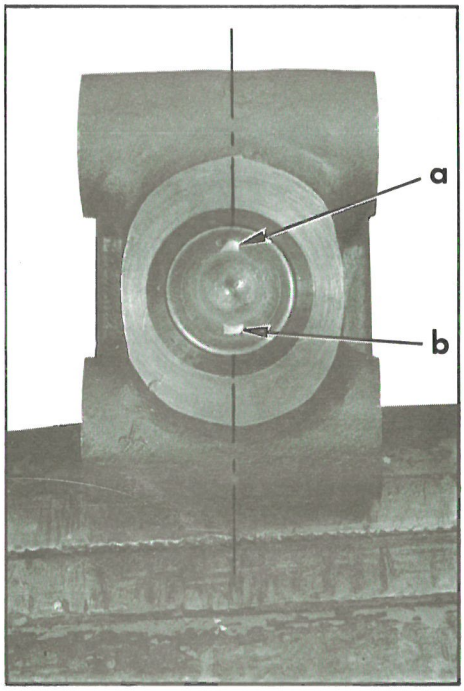

FITTING

5. Place the new cups (3) in position on the piston (2).

6. Insert the assembly of spring (6)-valve (4) with its spring (5) and piston (2) in the cylinder (7).

   The piston (2) should be positioned so that the two slots at « a » and « b » at its extremity are placed upright into the master cylinder.

7. Compress the spring and hold the spring, valve, piston assembly with tool MR. 630-73/16.

8. Offer up a new split pin (1).

   The split portion of pin « c » should be positioned upright and facing towards the rear of the master cylinder.

9. Press home the split pin.
   Disengage tool MR. 630-73/16.
   Check that the unit operates correctly.

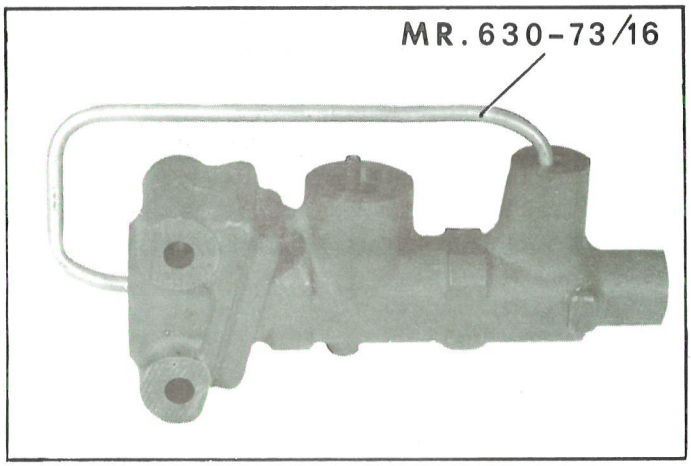

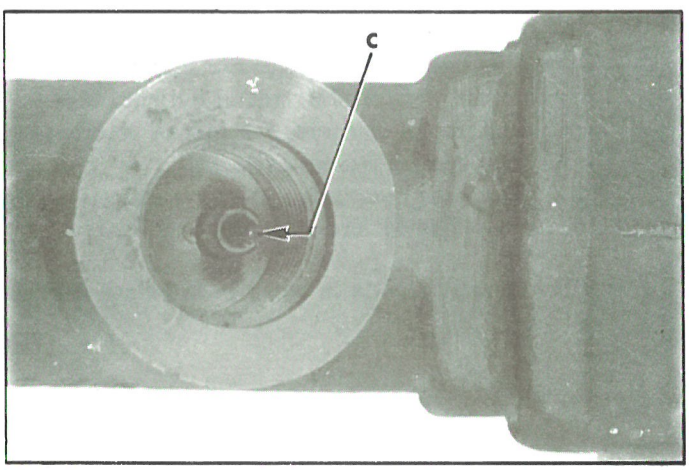

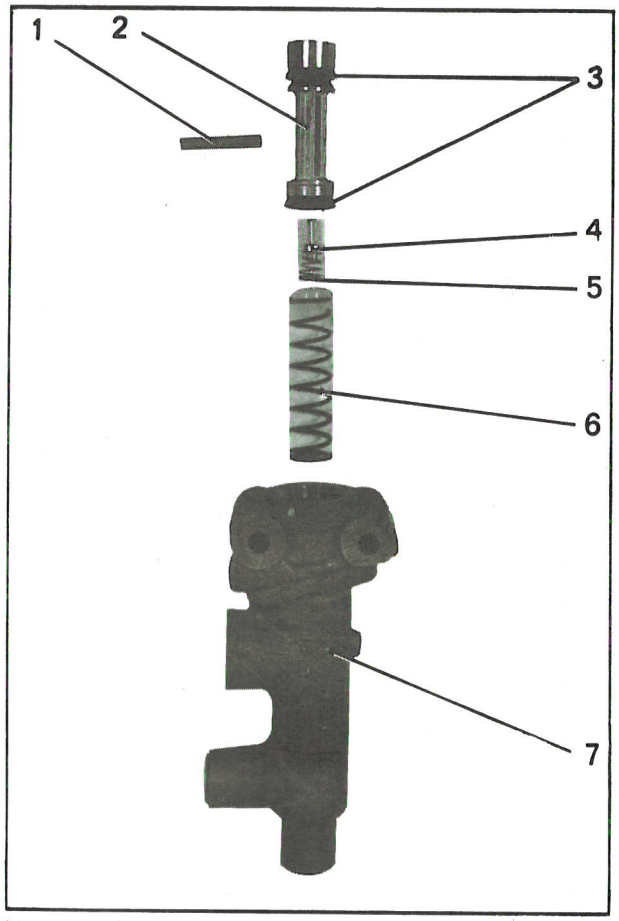

III. OVERHAULING A WHEEL CYLINDER
(with cups)

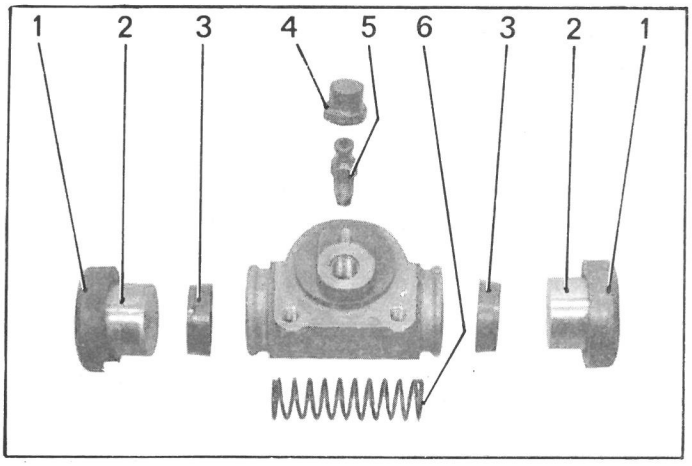

DISMANTLING

1. Remove :
   - the dust covers (1),
   - the pistons (2),
   - the cups (3),
   - the spring (6).

   Unscrew the bleed screw (5).

2. Clean all the parts. Use *only alcohol* or very clean brake fluid or scratches : if not, replace it.

FITTING

3. Coat the cylinder and cups with special brake fluid.

   Place in position in cylinder :
   - a piston (2) complete with dust cover (1),
   - a cup (3),
   - the spring (6),
   - a cup (3),
   - a piston (2) complete with its dust cover (1).

4. Fit the bleed screw (5) complete with its cap (4).

IV. OVERHAULING A WHEEL CYLINDER
(with O-ring seals)

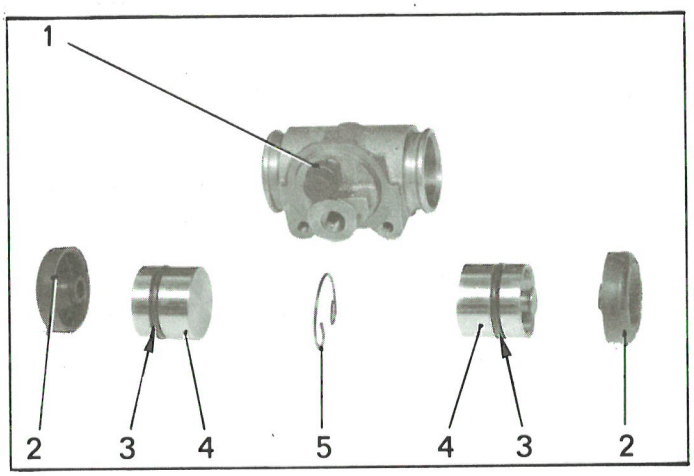

REMOVAL.

1. Remove :
- the bleed screw (1),
- the dust covers (2),
- the pistons (4),
- the locking circlip (5) *(as applicable)*,
- the O-ring seals (3) from pistons (4).

(Use a piece of brass wire A, flattened at one end, to remove the O-ring seals).

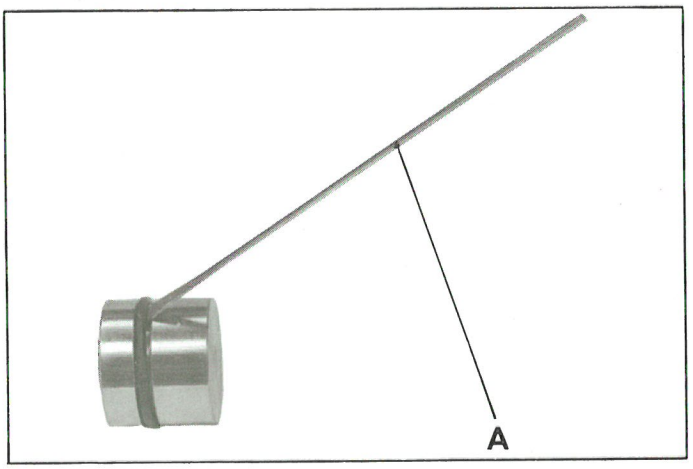

2. Clean all the parts. Use *only alcohol* or special brake fluid. *Any other product will cause* rubber parts to *deteriorate rapidly*.

The cylinder should bear no trace of rust or scratches; if it does, replace it.

FITTING

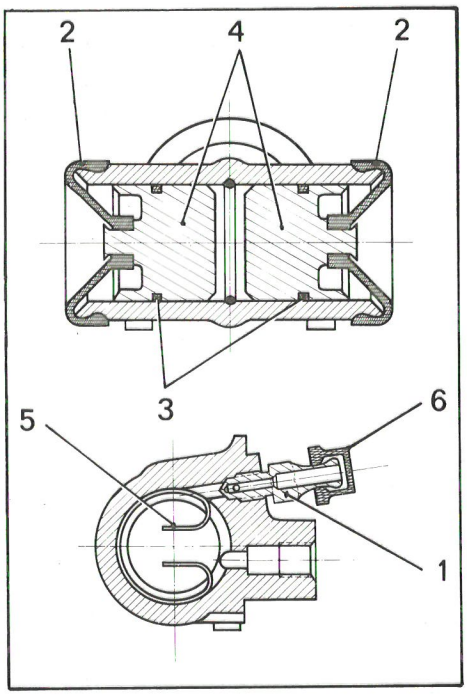

3. Fit :
- the locking circlip (5) *(if necessary)*. Place in position its ends so that the *feed pipe is not obstructed* (see diagram opposite),
- the O-ring seals (3) on the pistons (4),
- the pistons (4) coated with special brake fluid,
- the dust covers (2),
- the bleed screw (1) with its cap (6).

OVERHAULING A FRONT BRAKE CALIPER.

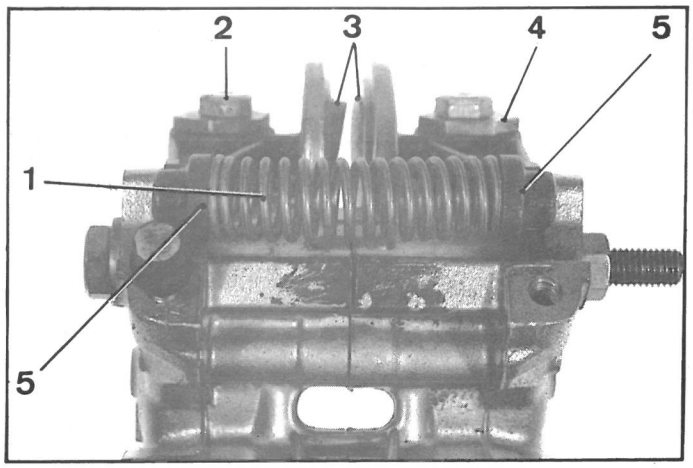

9560

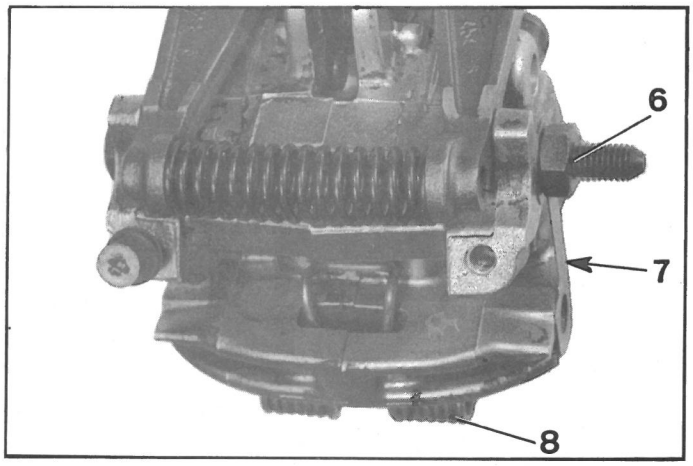

5545

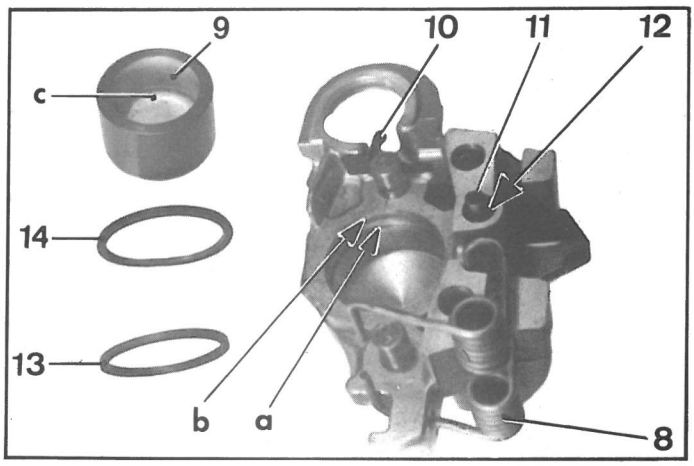

5628

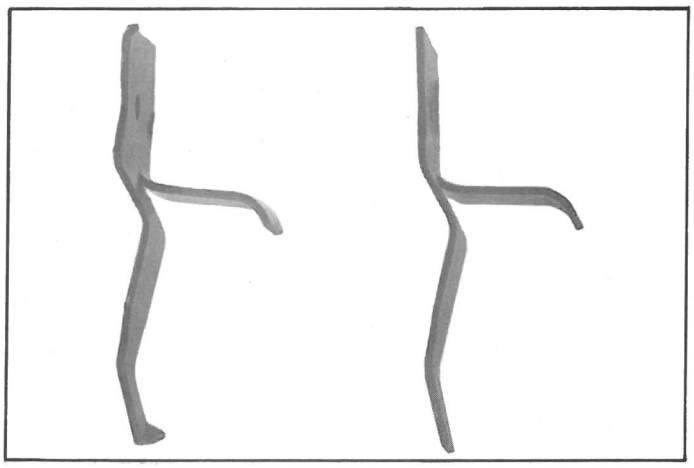
7597

REMOVAL.

1. Strip the front caliper :
Release handbrake pads (3).
Remove bolts (2) and eccentrics (4).
Release levers (5) and spring (1).
Remove bolt (6) and uncouple the two half-calipers.
Remove the pad locking spring (8).
Remove noise-proof springs (10).
REMARK : Do not lose shim (s) (7).

2. Strip the two half-calipers :
Remove O-ring seal (12) and tube (11).
Extract piston (9) by blowing compressed air through the feed hole (location of tube (11)).
Remove abutting joint (13), dust seal (14).

3. Clean the parts with petrol. Blow compressed air to dry the parts.
NOTE : If traces of knock or score are seen on pistons (9), replace them.

FITTING.

4. Prepare the two half-calipers :
a) Soak the piston and its housing in LHM fluid.
NOTE : Each time an operation is carried out, change the gaskets.
b) Fit :
- abutting joint (13) in groove « a »,
- dust seal (14) in groove « b ».

Insert piston (9) in its housing, with incurved part « c » directed towards the outer part of the caliper.
Fit tube (11) and O-ring seal (12).
Fit noise-proof spring (10).
REMARK : Never fit the noise-proof springs intended for the first fitting (without peg).
Replace them by the springs intended for the second fitting (with peg, see the figure).
c) Fit locking spring (8) of the main brake pads.

5. Assemble the half-calipers :
Assemble them by positioning spring (8).
Fit shim (s) (7), assembly bolt (6) and its nut.

6. Prepare the brake caliper :
Fit :
- levers (5),
- eccentrics (4),
- bolts (2) (without tightening them),
- springs (1).

after having slightly greased them.
Position eccentrics (4) so as to give the maximum free-play to pads (3).
Fit handbrake pads (3) and keep them separated using a piece of rubber.

LIST OF SPECIAL TOOLS MENTIONED IN THE SECOND SECTION OF MANUAL No. 816-2

NOTE : The tools with a number preceded by (*) are no longer sold by the FENWICK Company, and should be made up according to the relevant MR. drawings.

DESCRIPTION	NUMBER Repair - Method	REFERENCE of tool on sale
(1) GENERAL		
Support for raising vehicle on jack	MR. 630-41/3	
(2) ENGINE		
Base for supports on bench	MR. 630-43/15	
Support for engine on bench	MR. 630-43/4	
Spanner for oil filter		1683-T
Extractor for needle cage location crankshaft		1671-T
Stud extractor		2410-T
Extractor for gudgeon pins (2 CV)	MR. 630-23/8	
Extractor for gudgeon pins (3 CV)	MR. 630-23/16	
Extractor for conrod small-end bush	MR. 630-23/9	
Bush for fitting piston rings (U-FLEX)		3010-T
Mandrel for grinding engine flywheel (2 CV)	MR. 630-35/9	
Mandrel for grinding engine flywheel (3 CV)	MR. 630-35/19	
Mandrel for positioning discharge valve seat	MR. 630-31/90	
Crimping tool for discharge valve seat	MR. 630-31/91	
Mandrel for rear engine bearing seal (dia. 48 mm)	MR. 630-34/25	* 3007-T
Mandrel for rear engine bearing seal (dia. 52.5 mm)		3004-T
Mandrel for rear bearing seal (dia. 56 mm)		3007-T bis
Mandrel for fitting bearing cage	MR. 630-31/46	
Mandrel for fitting self-lubricating bushes		3052-T bis
Bush for fitting piston rings (dia. 66 mm)		1654-T
Bush for fitting piston rings (dia. 68.5 mm)		3063-T
Bush for fitting piston rings (dia. 74 mm)		3010-T
Mandrel for removing and fitting the gudgeon pins		1699-T
Fixture for checking maximum centrifugal advance		1692-T
Extractor for removing fan		3006-T bis
Extractor for dynamo armature (6 volts)		2205-T
Spanner for screws with flats (6 × 9)		1677-T
Support for cylinder head on bench		3001-T bis
Spring compressor for spring valve (Replaces 1613-T)		3084-T
Valve grinders, suction		1615-T
Pin for initial ignition advance setting	MR. 630-51/15	

LIST OF SPECIAL TOOLS MENTIONED IN THE SECOND SECTION OF MANUAL No. 816-2

DESCRIPTION	NUMBERS Repair-Method	REFERENCE of tool on sale
(3) (4) CLUTCH - GEARBOX		
Mandrel for grinding engine flywheel (2 CV)	MR. 630-35/9	
Mandrel for grinding engine flywheel (3 CV)	MR. 630-35/19	
Mandrel for centring clutch disc (toothed)	MR. 630-31/10	
Mandrel for centring clutch disc (splined)		1713-T
Support for gearbox on bench	MR. 630-43/3	
Spanner for screws with flats (6 × 9)		1677-T
Universal extractor (replaces 1750-T, 1736-T and 1743-T)		2405-T
« C » shaped wedge for dismantling mainshaft bearing	MR. 630-27/8	* 3151-T
Mandrel for fitting mainshaft oil retaining cup	MR. 630-32/14	
Cone for fitting segment on bevel pinion	MR. 630-31/34	
Thrust screw for fitting bevel pinion		3152-T
Mandrel for fitting rear roller bearing on gearbox	MR. 630-31/7	
Apparatus for supporting secondary gear train	MR. 630-64/4	
Apparatus for adjusting conic distance		2045-T
Dial gauge		2437-T
Dial gauge support 2437-T		1754-T or T bis
Flange for holding locking ball spring for 2nd - 3rd speed spindle	MR. 630-64/21	
Adjusting shim for 2nd and 3rd speed fork (thickness 1.8mm)		1786-T
Adjusting shim for overdrive fork (thickness 1.5 mm)		1785-T
Adjusting shim for overdrive fork (thickness 2.7 mm)		3153-T
Extension for dial gauge 2437-T		2443-T
Flanges for supporting differential	MR. 630-64/13	
Support for dial gauge		2041-T (or 5602-T)
Ring for centring clutch fork		3102-T
Adjusting spanner for front brake cams		2126-T
(7) (8) FRONT AND REAR AXLES		
Support for axle removed	MR. 630-42/4	
Spanner for TIMKEN bearing on arms		1833-T
Bearing remover for front and rear crossmember		1829-T bis
Assembly for front and rear hub nut		3321-T or 3301-T
Spanner for hub ring nuts and screw caps		3303-T or 3304-T
Mandrel for removal of front hubs	MR. 630-31/39	
Mandrel for fitting gaskets and bearings of hub	MR. 630-31/55	
Tubes for guiding crossmember bearings	MR. 630-31/54	
Jig for checking axle arms	MR. 630-51/46	
Tool for locking hub	MR. 630-64/40	
Puller with separator (replaces 1813-T)		2405-T
Snap for rivetting wheel studs	MR. 630-62/6	
(10) STEERING		
Extractor for steering rods		3502-T bis
Bead for 3502-T bis		1965 T
Spanner for interior nuts of steering ball joints	MR. 630-16/2	
Spanner for nut and rack pinion		3503-T

LIST OF SPECIAL TOOLS MENTIONED IN THE SECOND SECTION OF MANUAL N° 816-2

DESCRIPTION	NUMBERS Repair-Method	REFERENCE of tool on sale
(11) BRAKES		
Extractor for rear drum		3551-T
Tool for removing and fitting thrust spring caps on brake shoes		3556-T
Mandrel for grinding front drums	MR. 630-35/7	* 2118-T
Mandrel for grinding front drums	MR. 630-35/11	
Mandrel for grinding rear drums	MR. 630-35/12	* 3553-T
Mandrel for grinding rear drums	MR. 630-35/17	* 2135-T
Rivetting snap for locking brake cams	MR. 630-62/11	
Dolly for MR. 630-62/11	MR. 630-62/13	
Checking apparatus for centring front brake shoes linings		3570-T
Checking apparatus for centring rear brake shoe linings		2113-T
Checking apparatus for centring rear brake shoe linings		3555-T
Tool for holding master cylinder piston	MR. 630-73/16	
MISCELLANEOUS		
« HELI-COIL » kit		2467-T

MR. 630-41/3

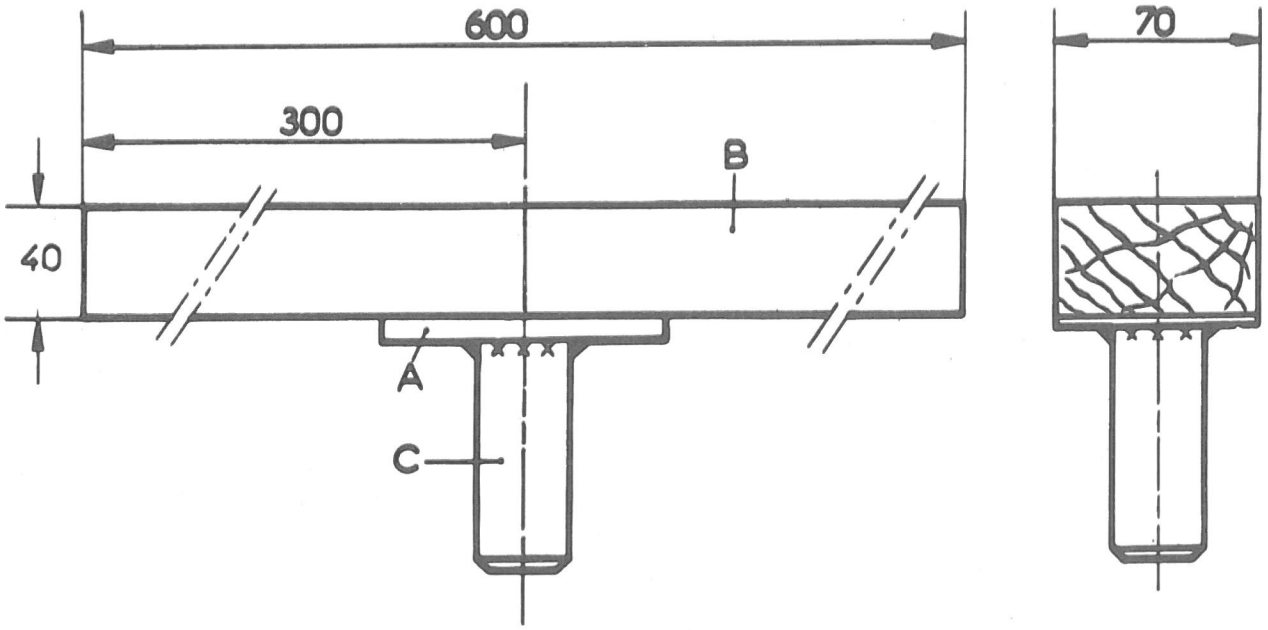

Detail of plate A

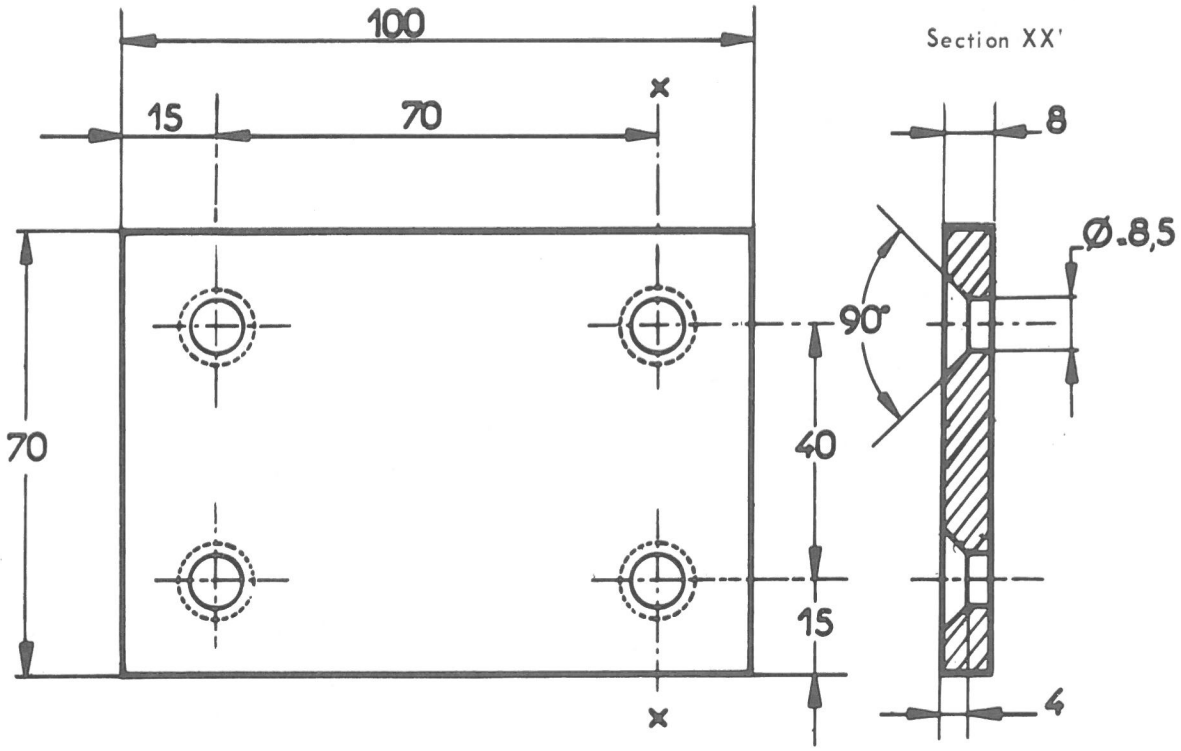

A - Mounting plate, (steel plate, 8 mm thick)
B - Oak beam 40 · 70 mm, length 600 mm, grain length wise
C - Drawn steel, height and diameter according to jack
- Fixed by 4 countersunk head screws, diameter 8 mm, length 40 mm

MR. 630-23/8

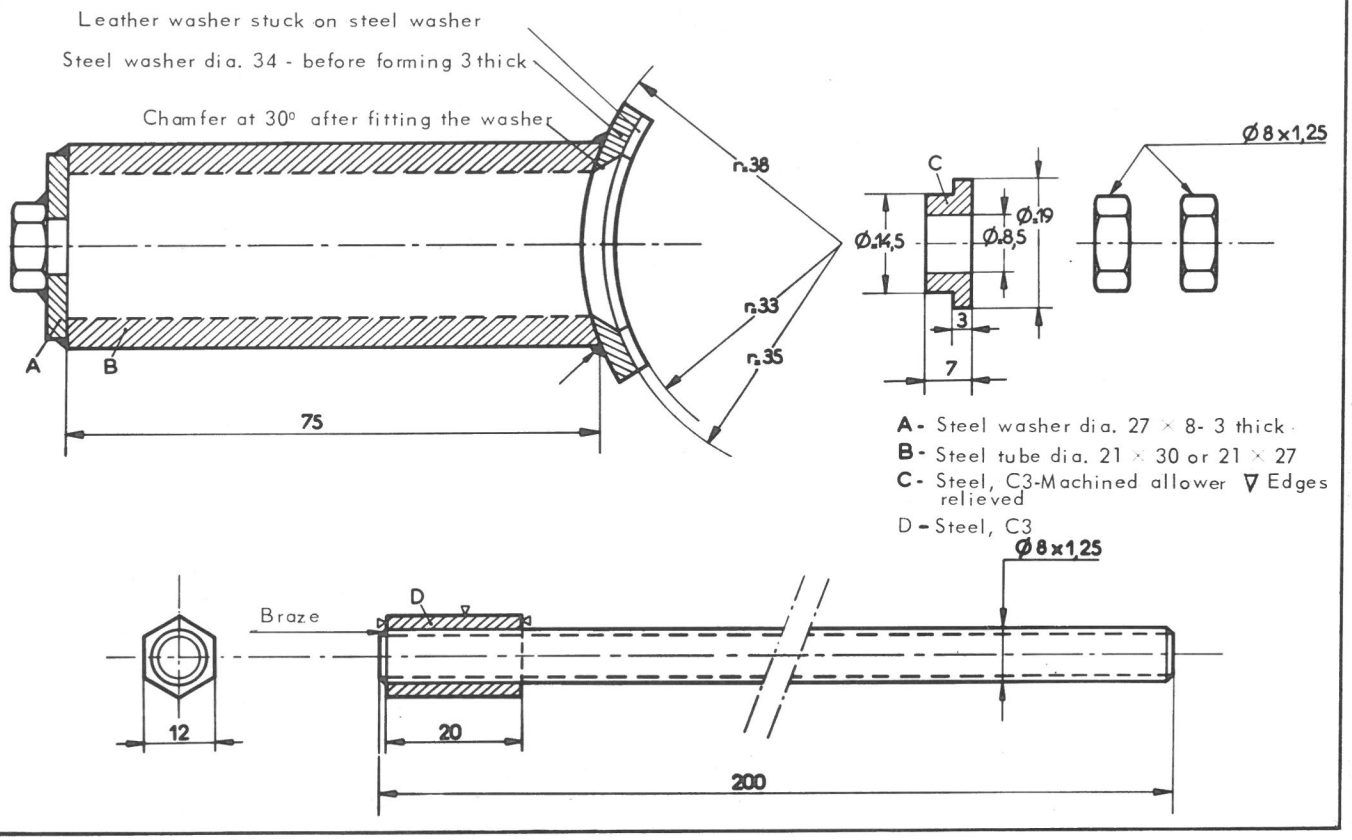

MR. 630 - 23/9

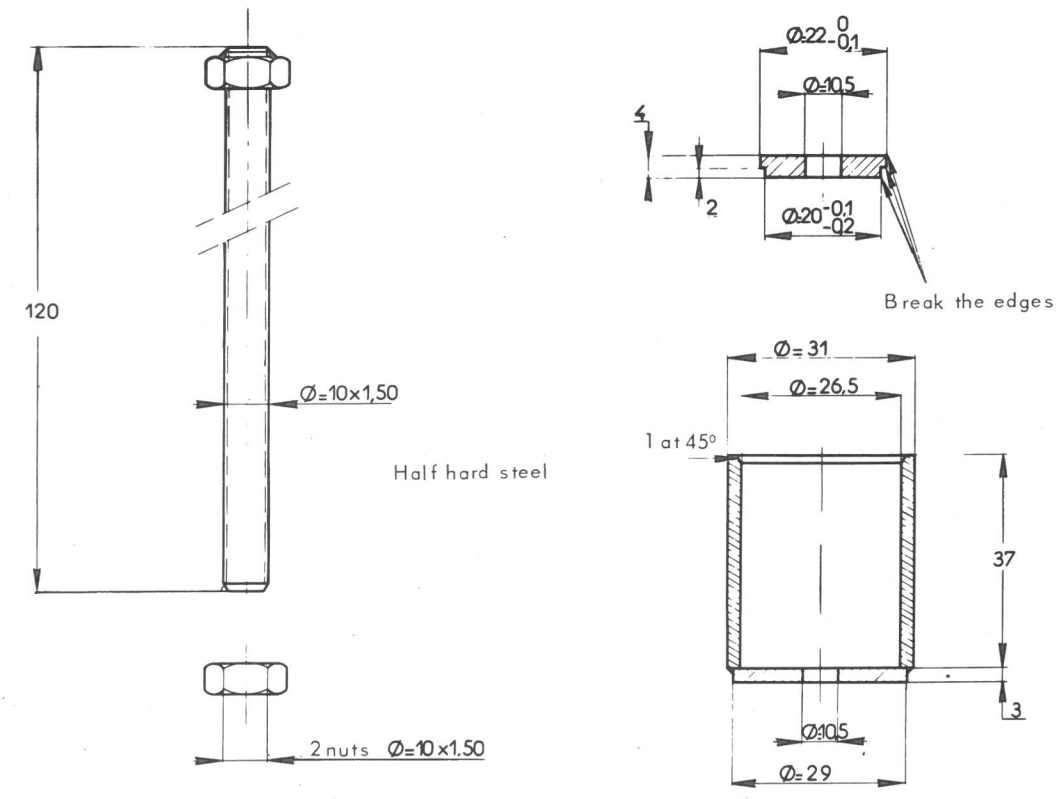

MR.630_23/16

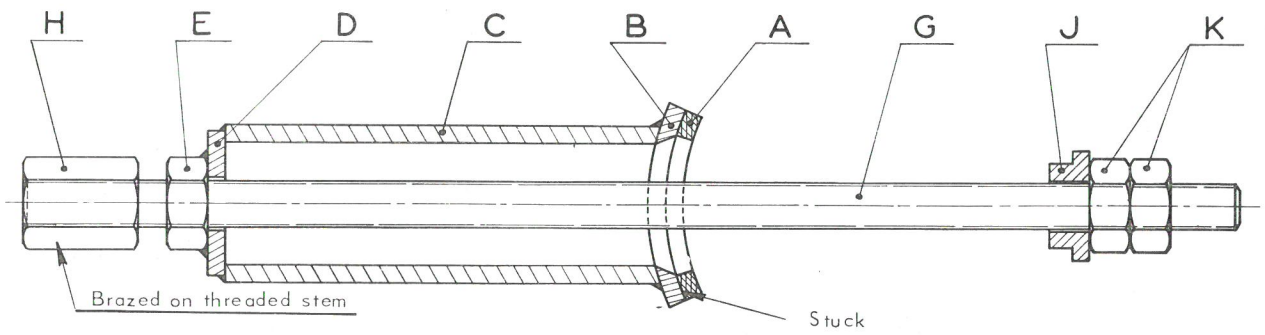

Ref	Qty	Material	Size	Sketch
A	1	leather	ϕ=34 3 thick	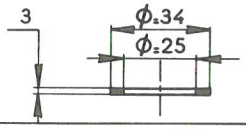
B	1	1/2 hard	ϕ=34 3 thick	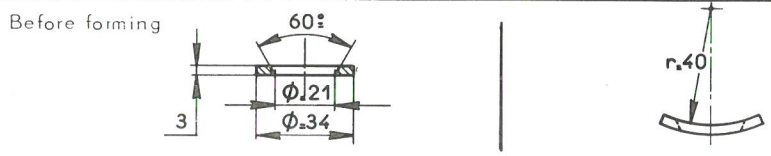
C	1	tube 21x27	L.=75	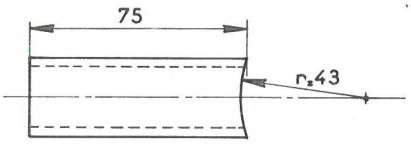
D	1	steel strip 25x3	L.=30	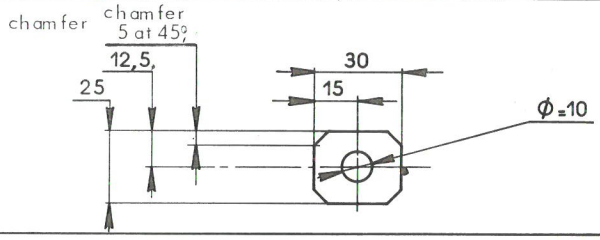
E	1	steel	ϕ=8x1,25	standard nut
G	1	threaded stem ϕ=8x1,25	L.=225	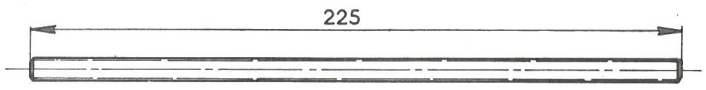
H	1	1/2 hard steel	14 A/F L.=20	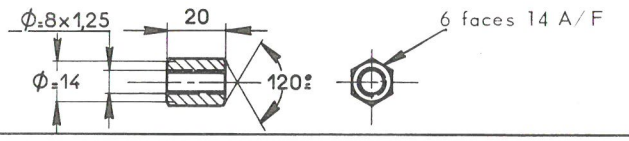
J	1	1/2 hard steel	ϕ=19 7 thick	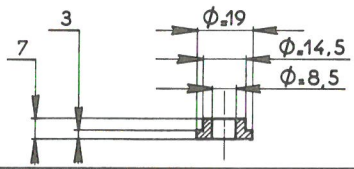
K	2	steel	ϕ=8x1,25	standard nut

MR. 630-31/46

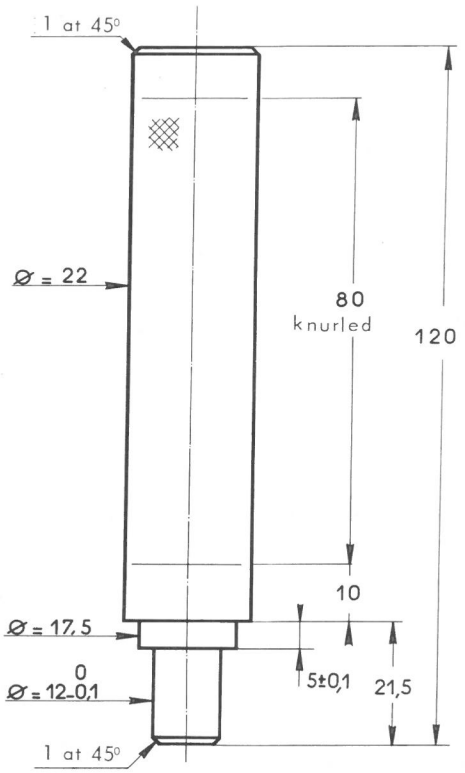

MR. 630-31/90

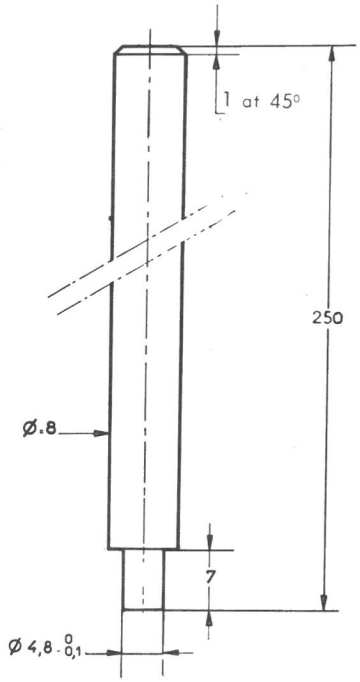

Half hard steel

MR 630-31/91

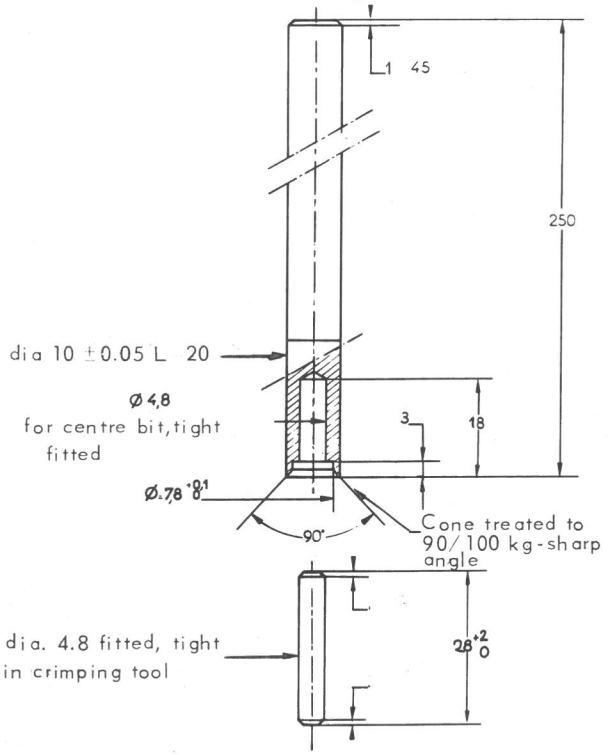

Half-hard steel

MR.630-43/4

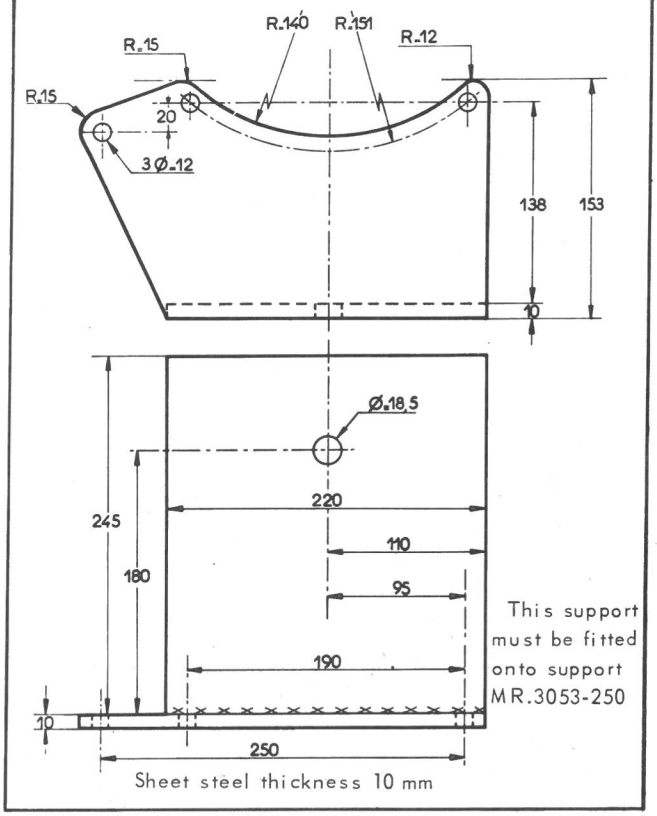

This support must be fitted onto support MR.3053-250

Sheet steel thickness 10 mm

MR. 630-34/25

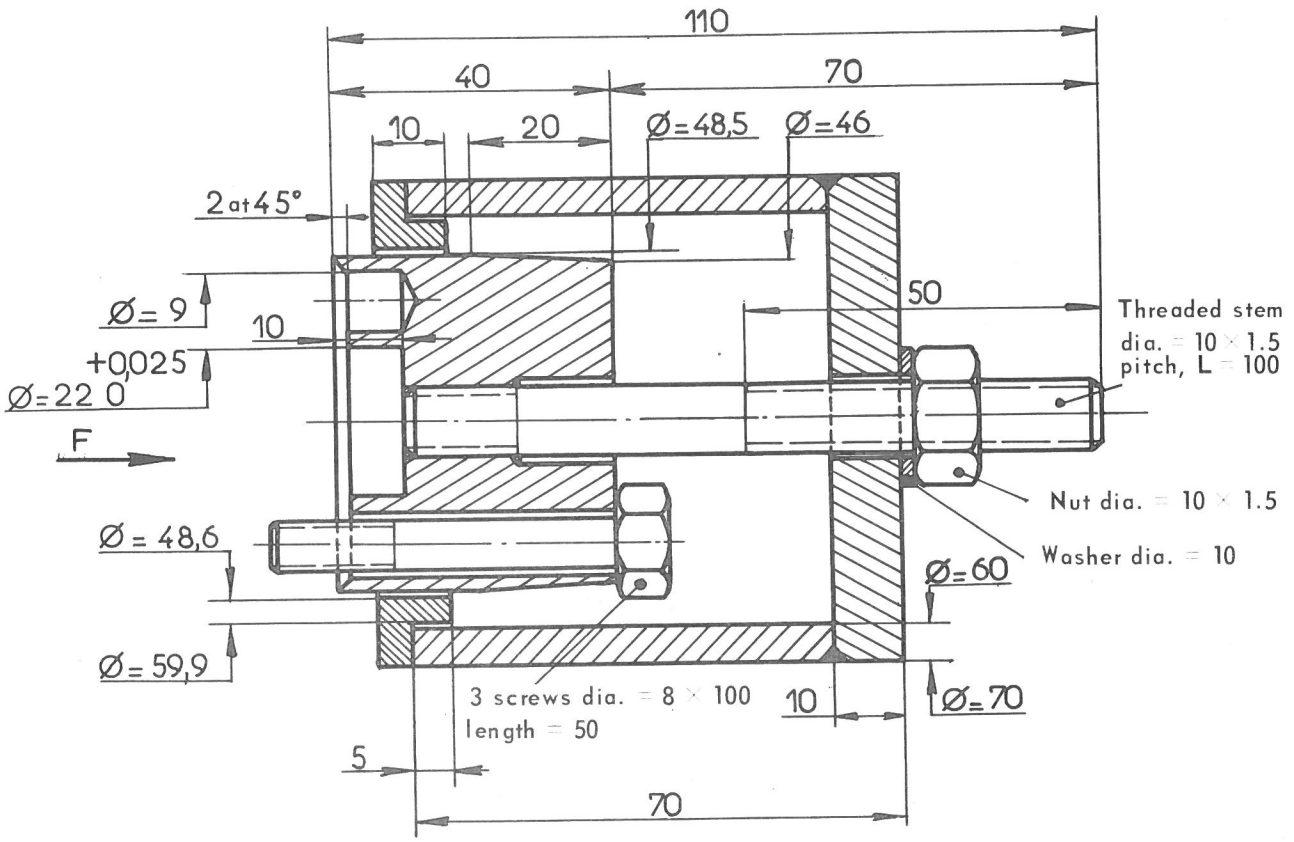

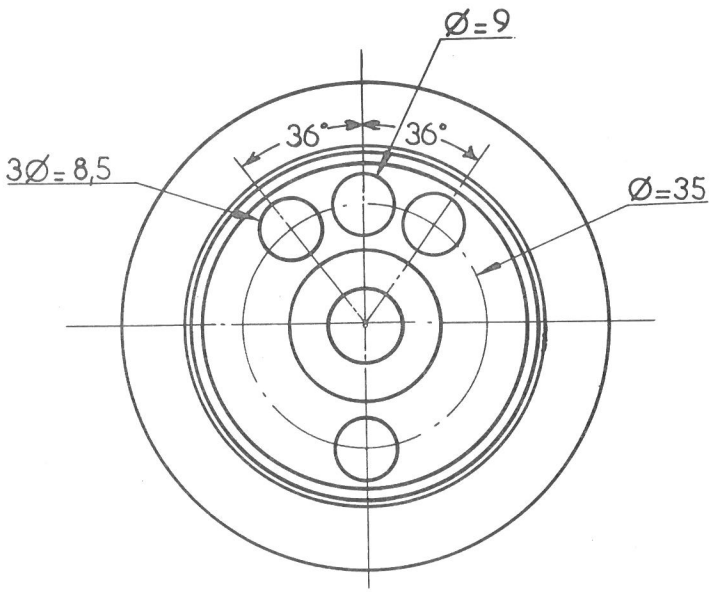

View along F

MR 630_43/15

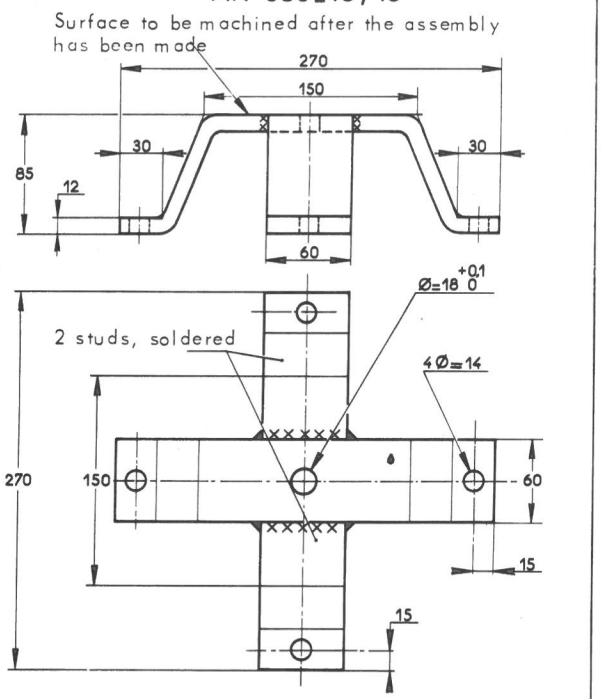

Half-hard steel 60×12

MR. 630-51/15

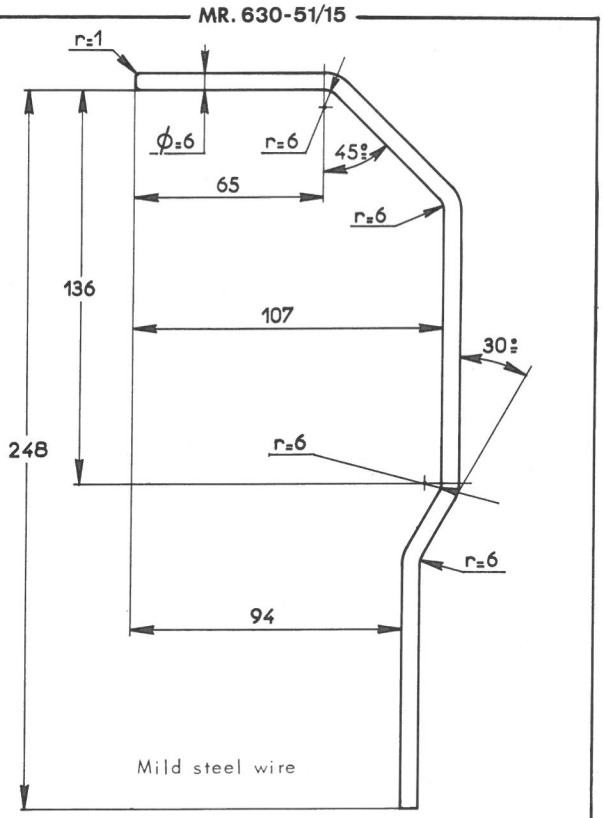

Developed length 340

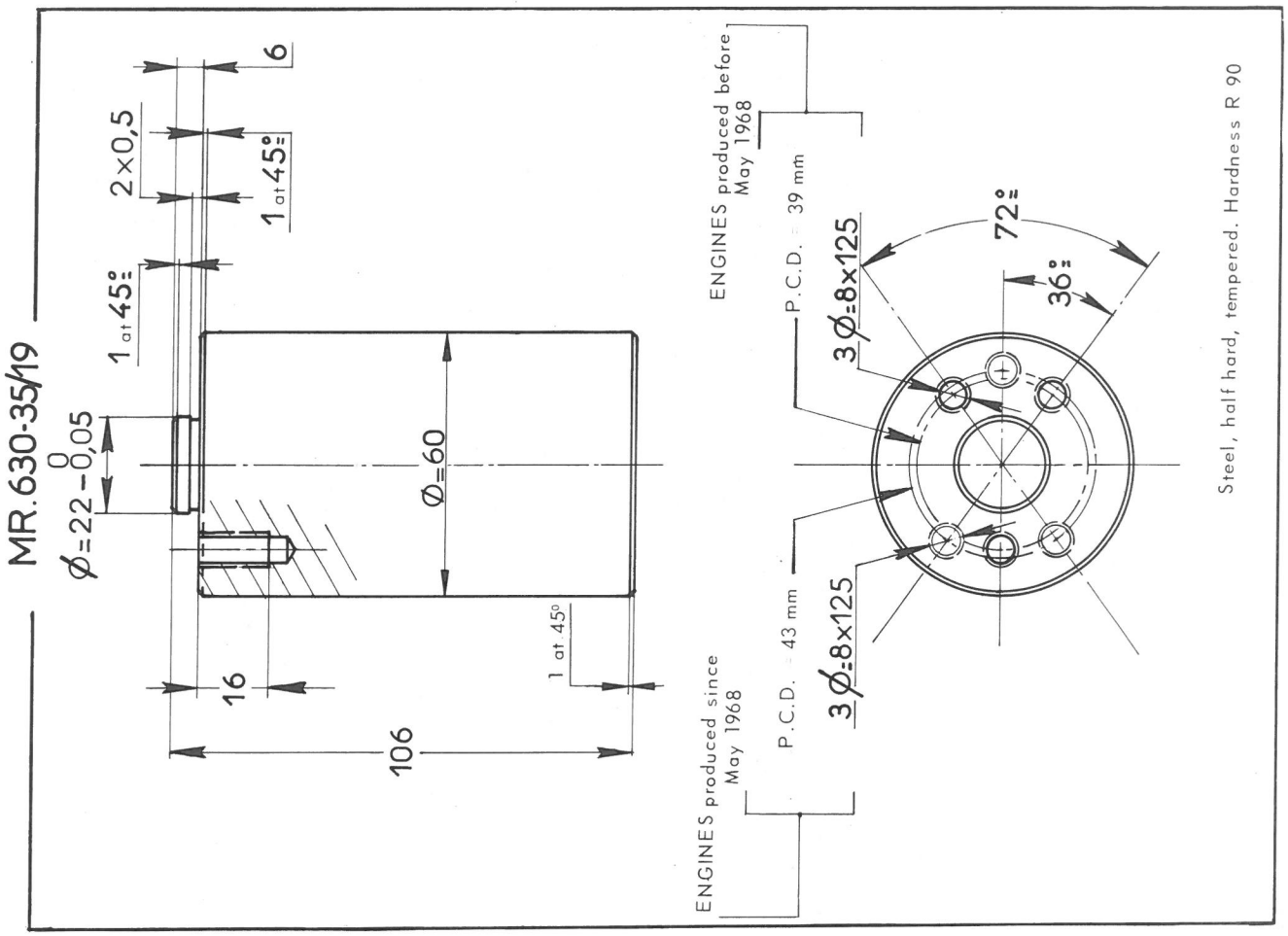
MR.630-35/19
Ø=22 -0,05 0
1 at 45°
2×0,5
1 at 45°
6
Ø=60
16
106
1 at 45°
ENGINES produced before May 1968
P.C.D. = 39 mm
3 Ø=8×125
72°
36°
ENGINES produced since May 1968
P.C.D. = 43 mm
3 Ø=8×125
Steel, half hard, tempered. Hardness R 90

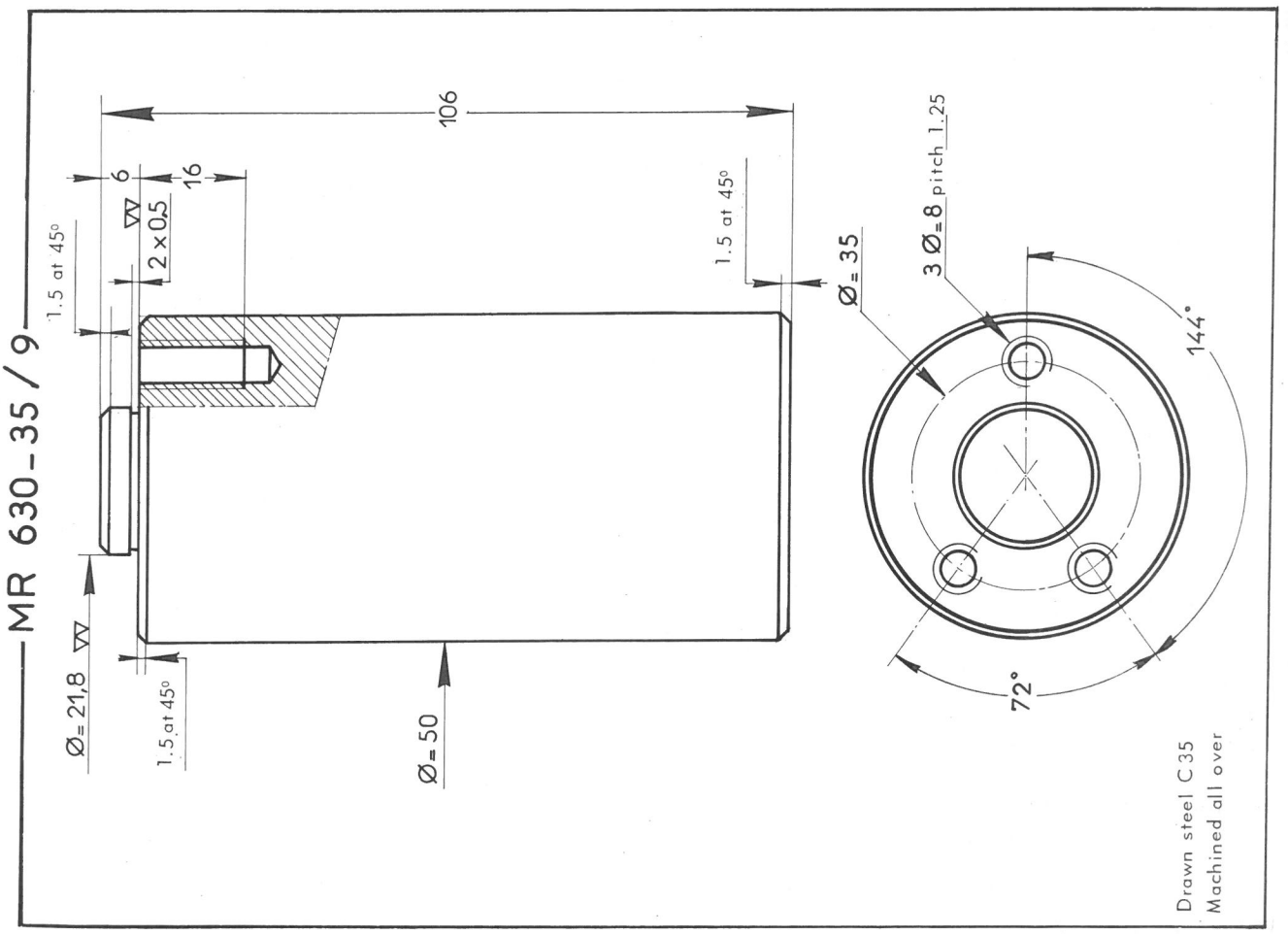
MR 630-35 / 9
106
6
16
2×0,5
1.5 at 45°
1.5 at 45°
Ø=21,8
1.5 at 45°
Ø=50
1.5 at 45°
Ø=35
3 Ø=8 pitch 1.25
144°
72°
Drawn steel C35
Machined all over

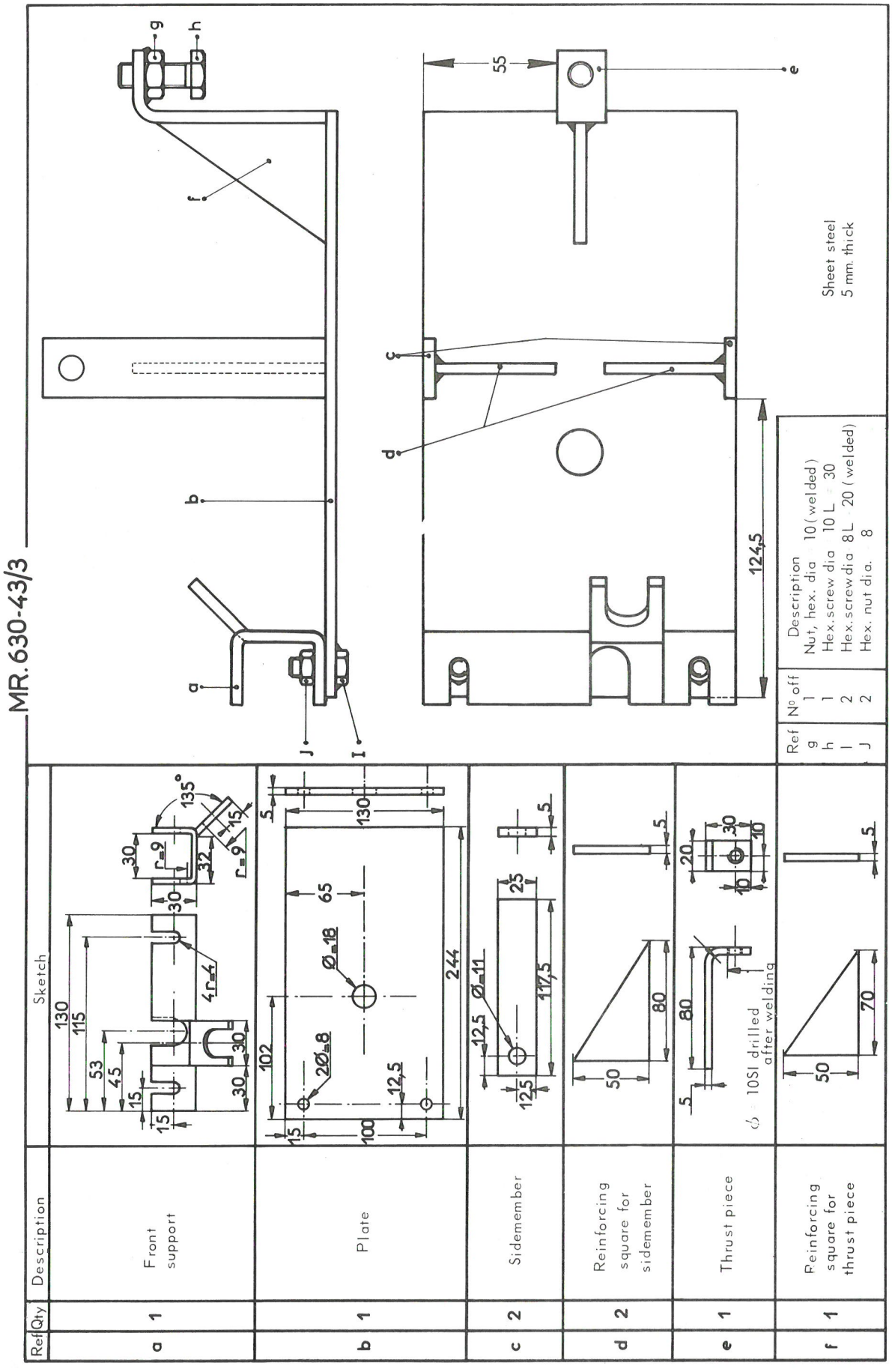
MR.630-43/3
Ref Qty Description Sketch
a 1 Front support
b 1 Plate
c 2 Sidemember
d 2 Reinforcing square for sidemember
e 1 Thrust piece
f 1 Reinforcing square for thrust piece
Ref No off Description
g 1 Nut, hex. dia 10 (welded)
h 1 Hex. screw dia 10 L = 30
I 2 Hex. screw dia 8 L = 20 (welded)
J 2 Hex. nut dia. 8
Sheet steel 5 mm. thick
10SI drilled after welding

MR. 630-64/4

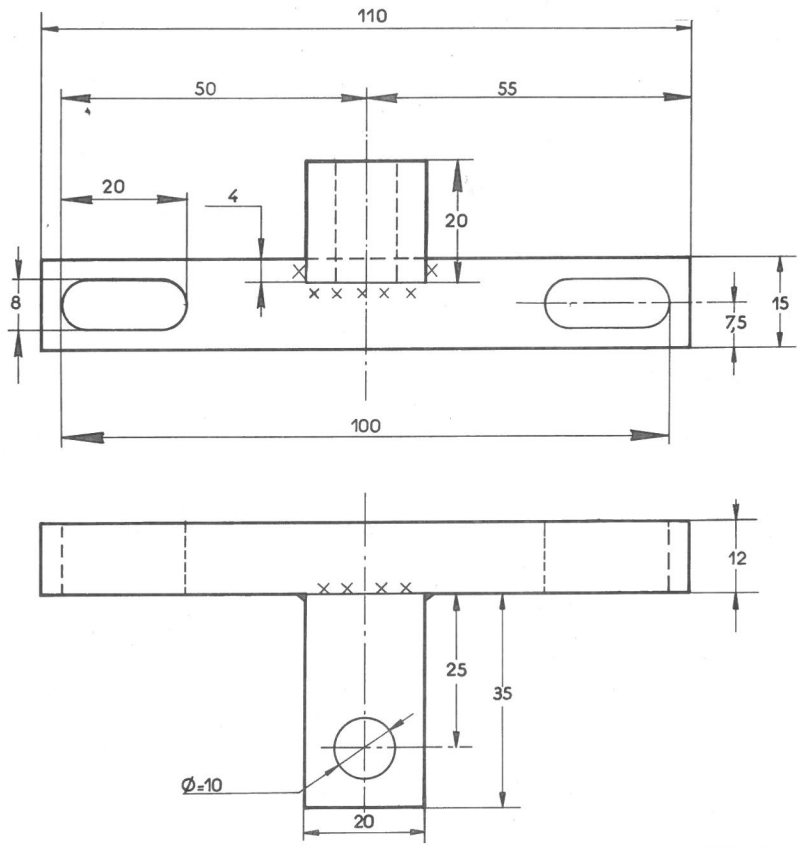

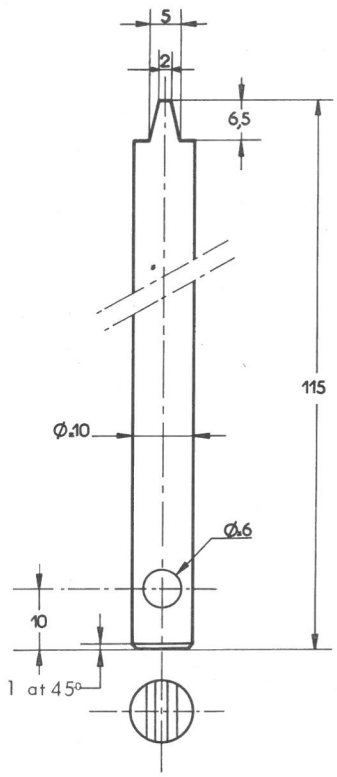

Half hard steel

MR. 630-64/13

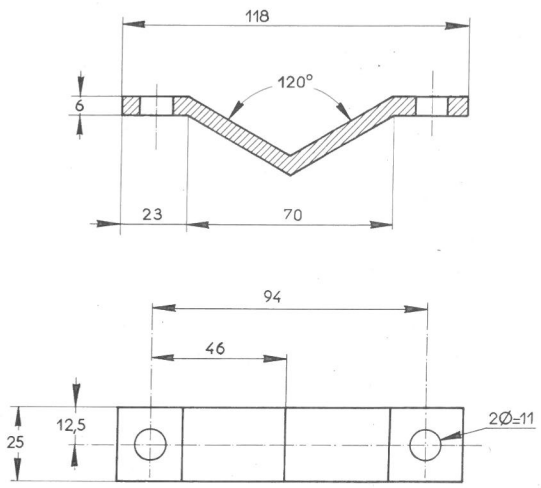

2 pieces
half hard steel

MR. 630-64/21

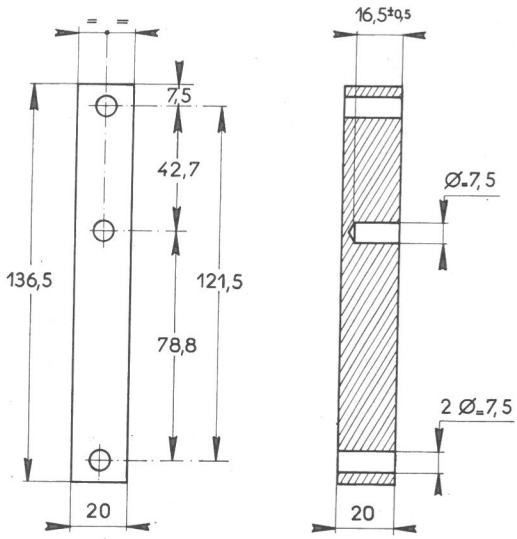

Material : Mild steel or
other hard material

MR - 630-31/10

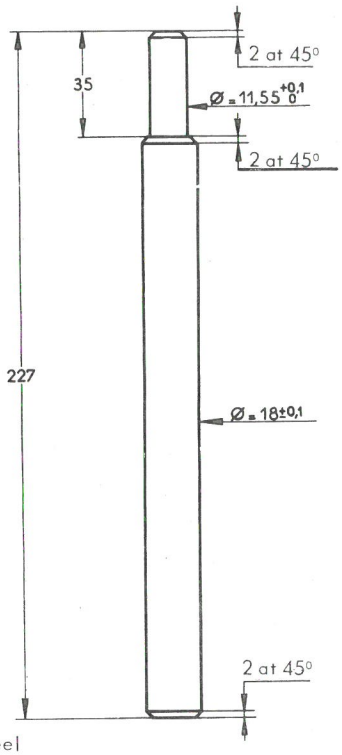

Half hard steel

MR. 630-31/34

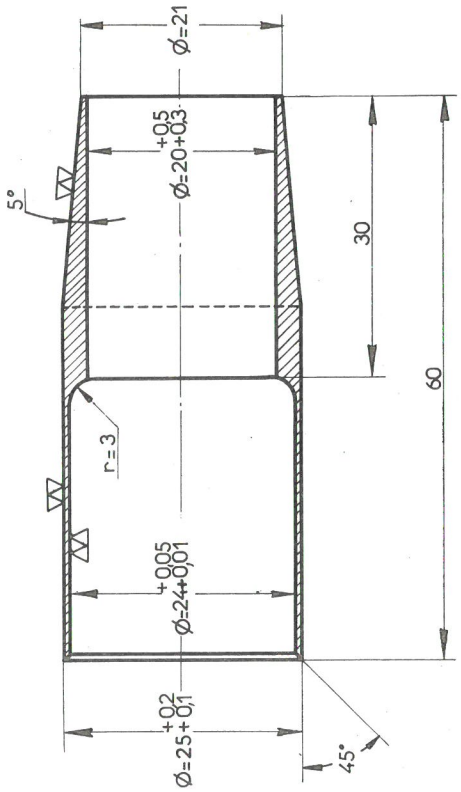

MR.630-32/7

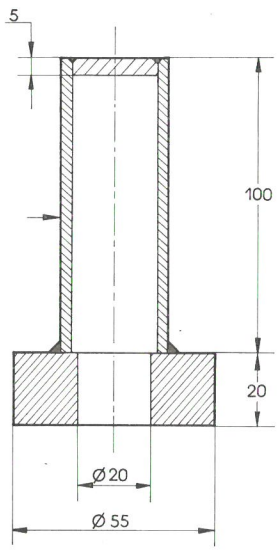

Half hard steel

MR 630-32/14

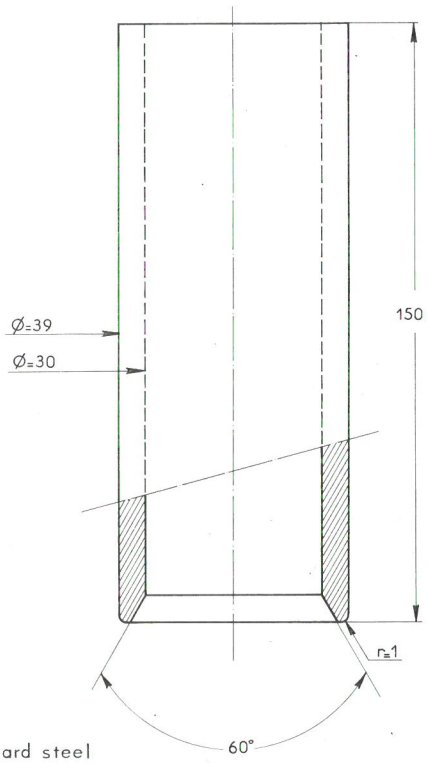

Half hard steel

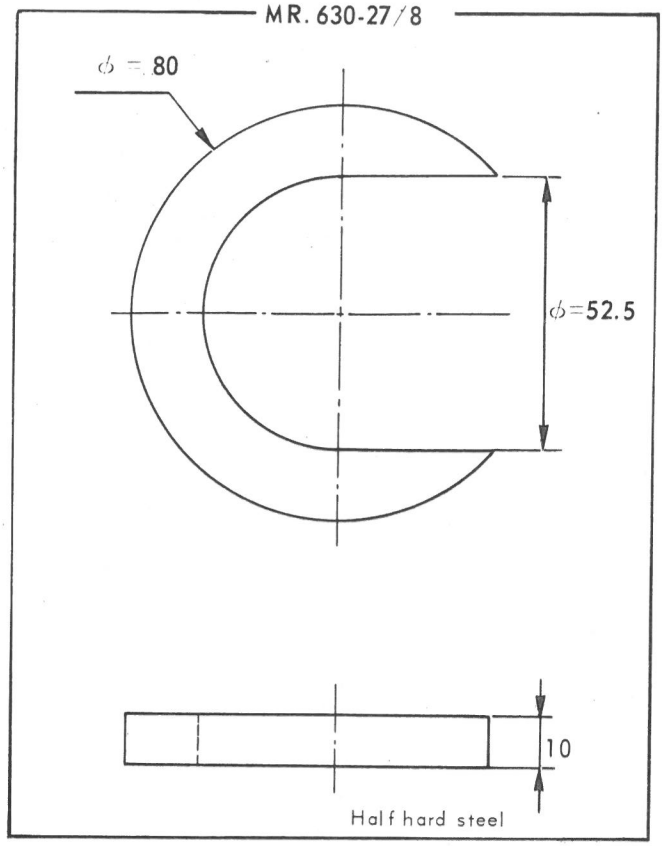
MR. 630-27/8
ϕ = 80
ϕ=52.5
10
Half hard steel

MR 630-31/39

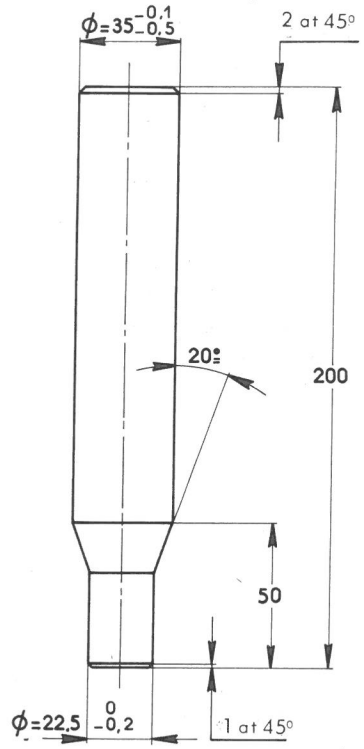

Steel half hard

MR 630-31/54

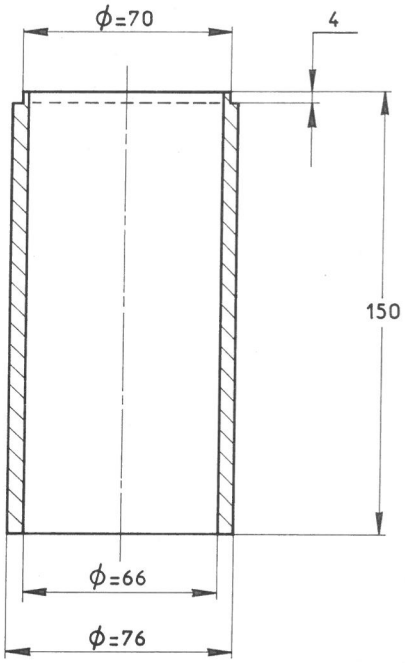

Steel half hard

MR-630-31/55

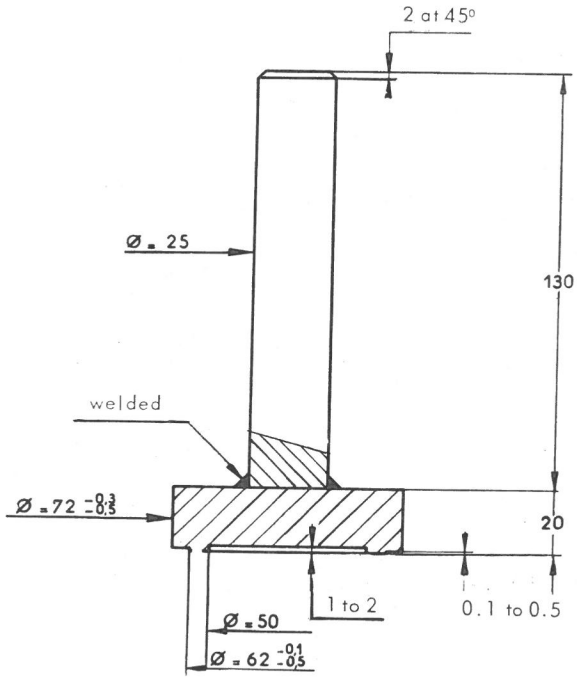

Steel half hard

MR 630-62 / 6

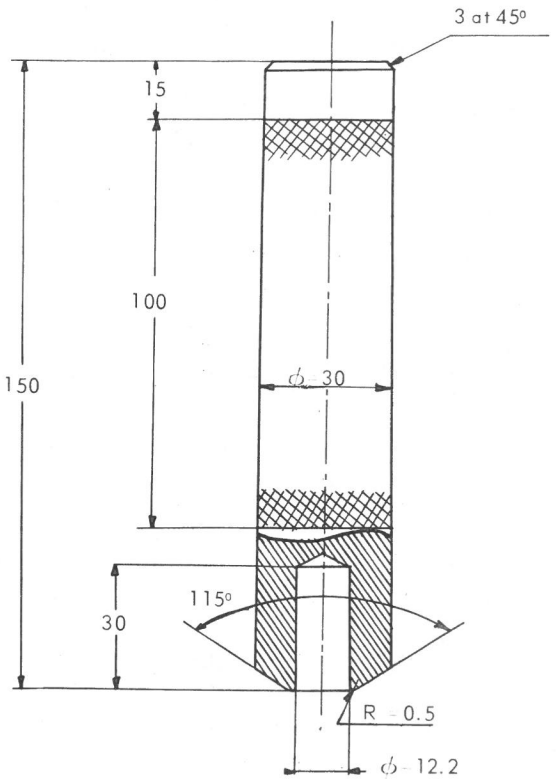

Half hard steel
end tempered and annealed

MR.630-42/4

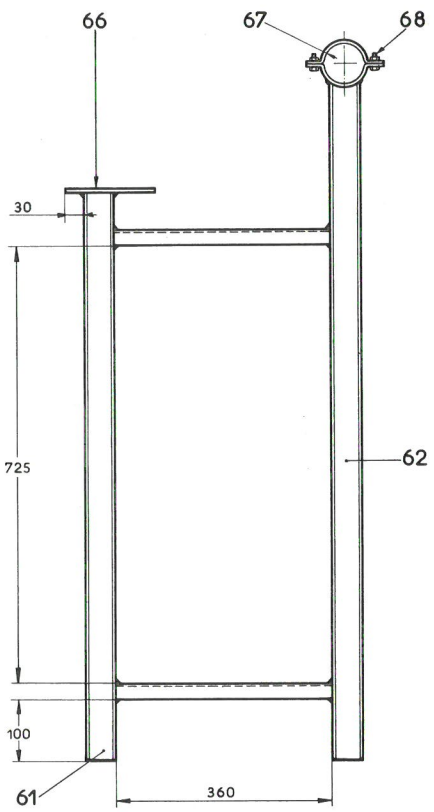

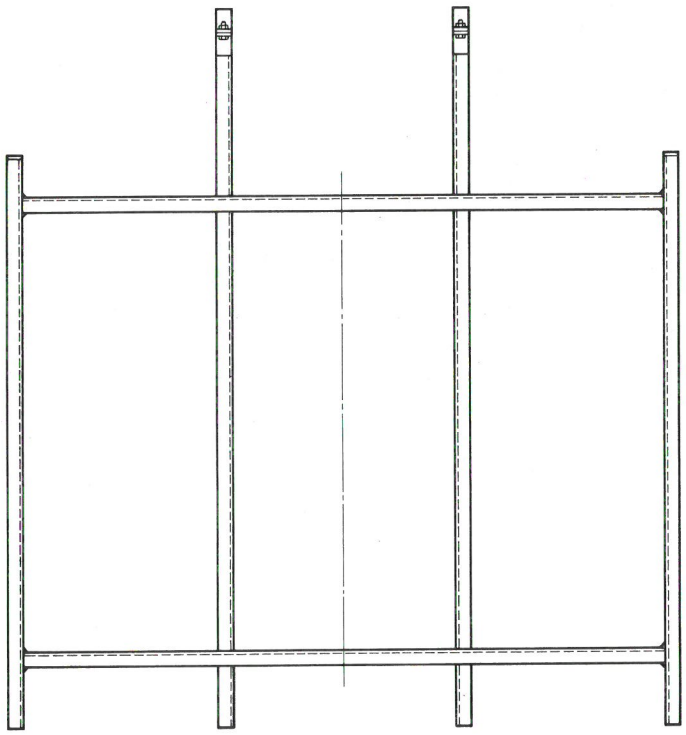

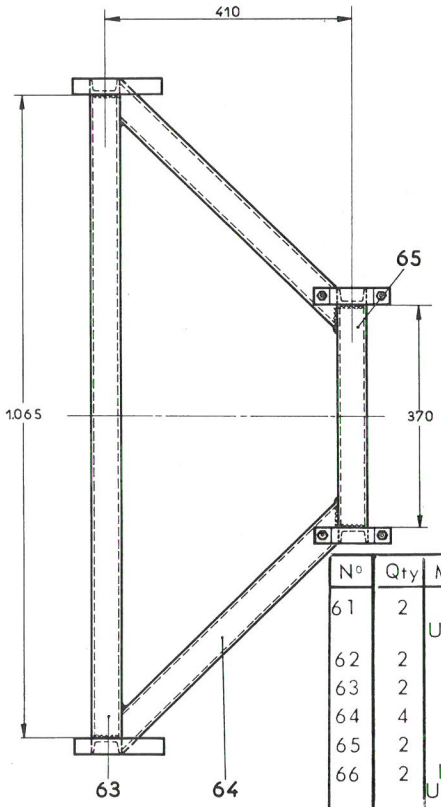

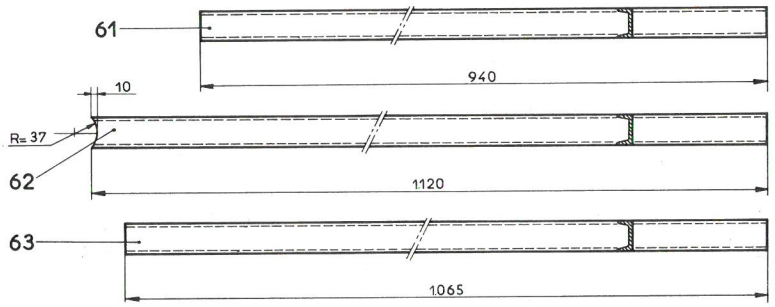

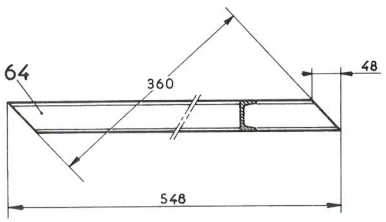

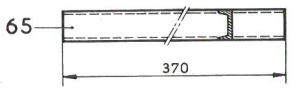

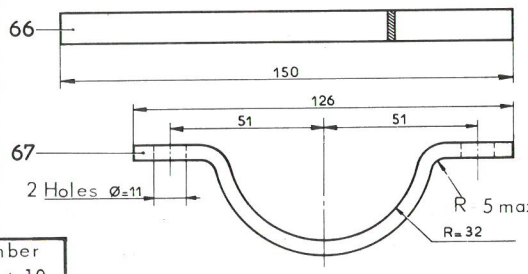

N°	Qty	Material	Description
61	2	Iron U50 · 25	Arm piece
62	2	"	Crossmember piece
63	2	"	Front crossmember
64	4	"	Side crossmember
65	2	"	Rear crossmember
66	2	Iron U 25 · 5	Rest for arm
67	4		Half clip for crossmember
68	4	"	Bolt: 10 · 1.50-L · 50Nut: 10

MR 630_51/46

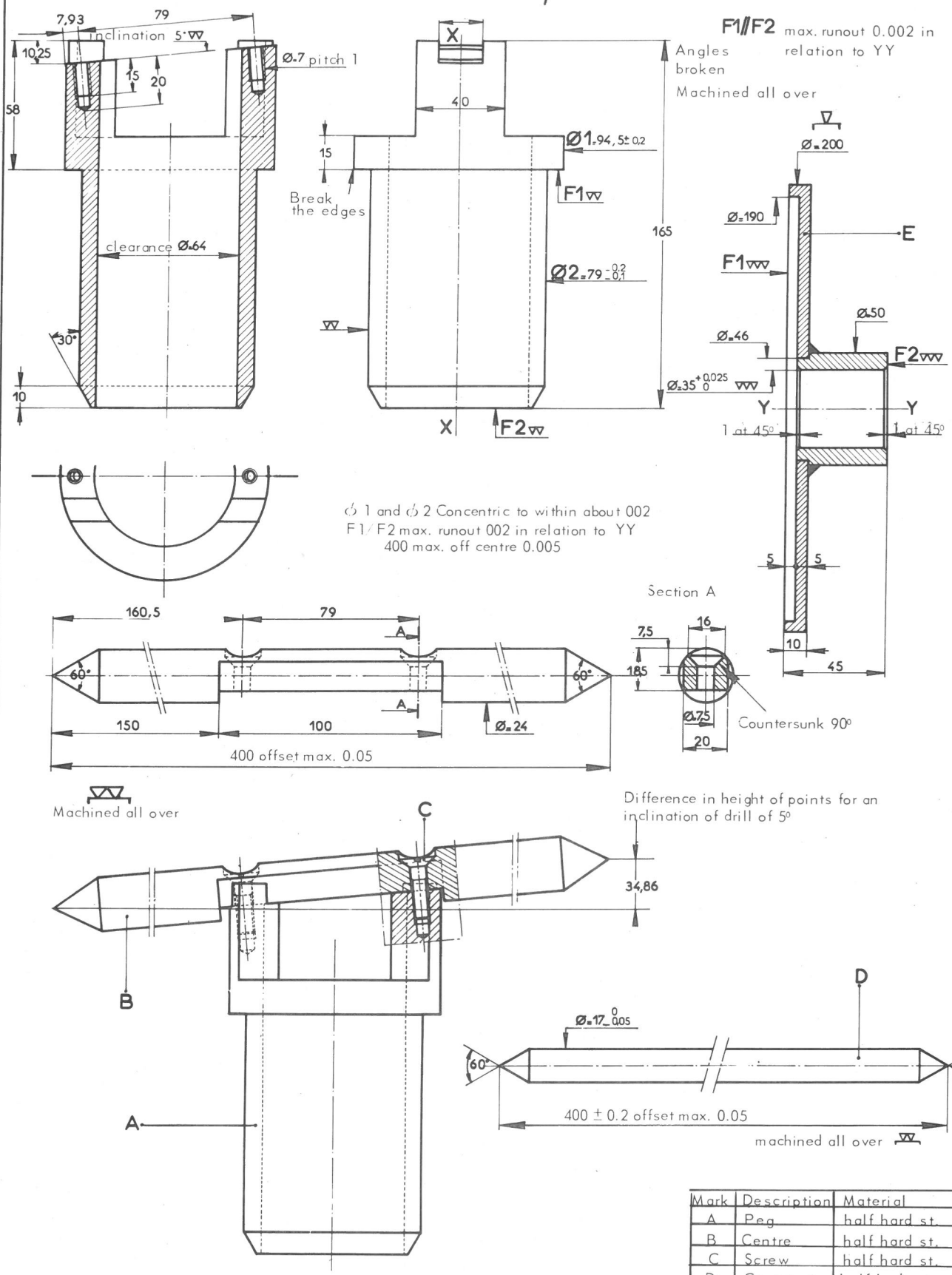

Mark	Description	Material	Qty
A	Peg	half hard st.	1
B	Centre	half hard st.	1
C	Screw	half hard st.	2
D	Centre pin	half hadr st.	1
E	Plate	half hard st.	1

MR.630.64/40

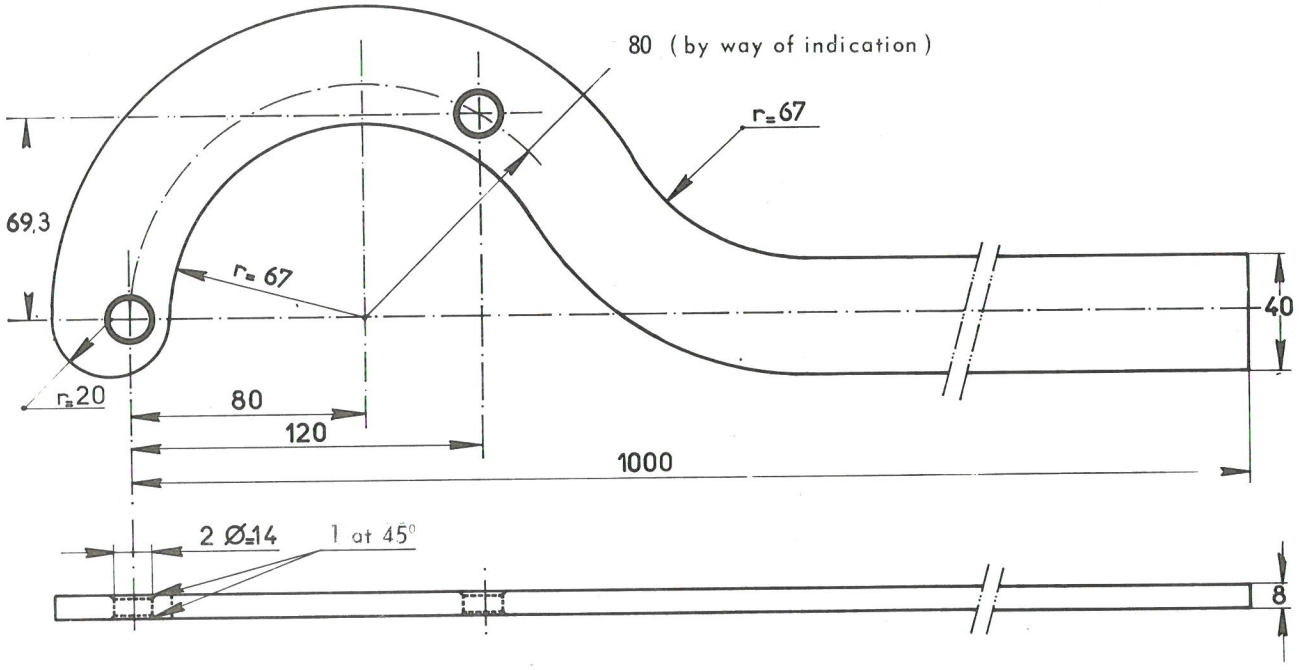

Material : Flat iron 40 · 8

Developed length 1200

MR-630-16/2

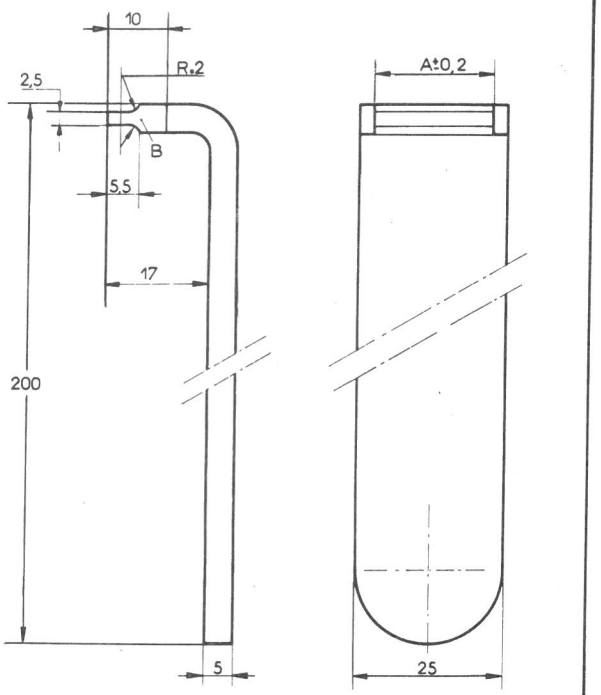

MR 3691-1 - A . 23,6
MR 3691-2 - A . 20,3
MR 3691-3 - A . 21,6

Steel, half-hard
Zone B treated to 90 Kg

MR. 630-35/12

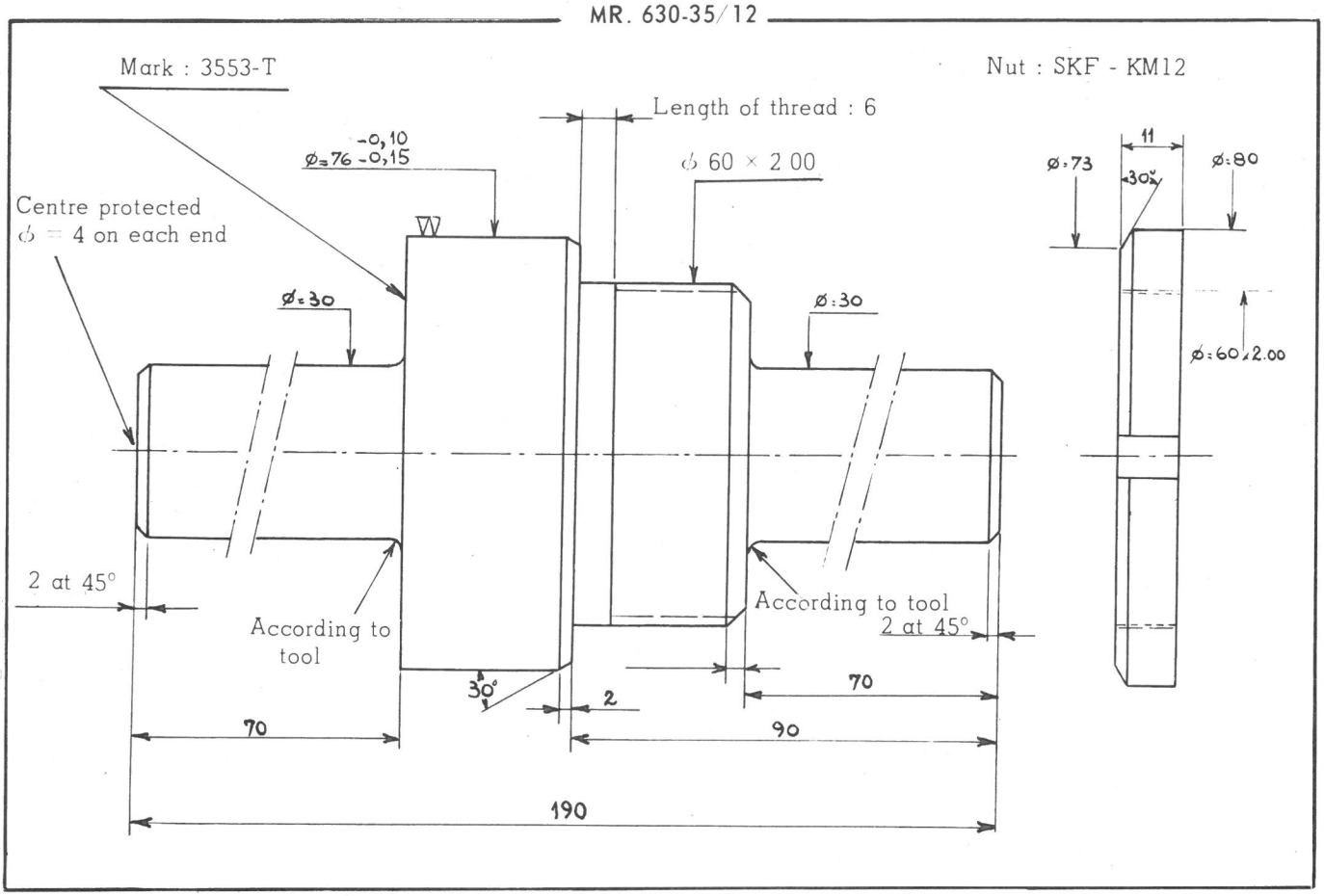

MR. 630-35/17

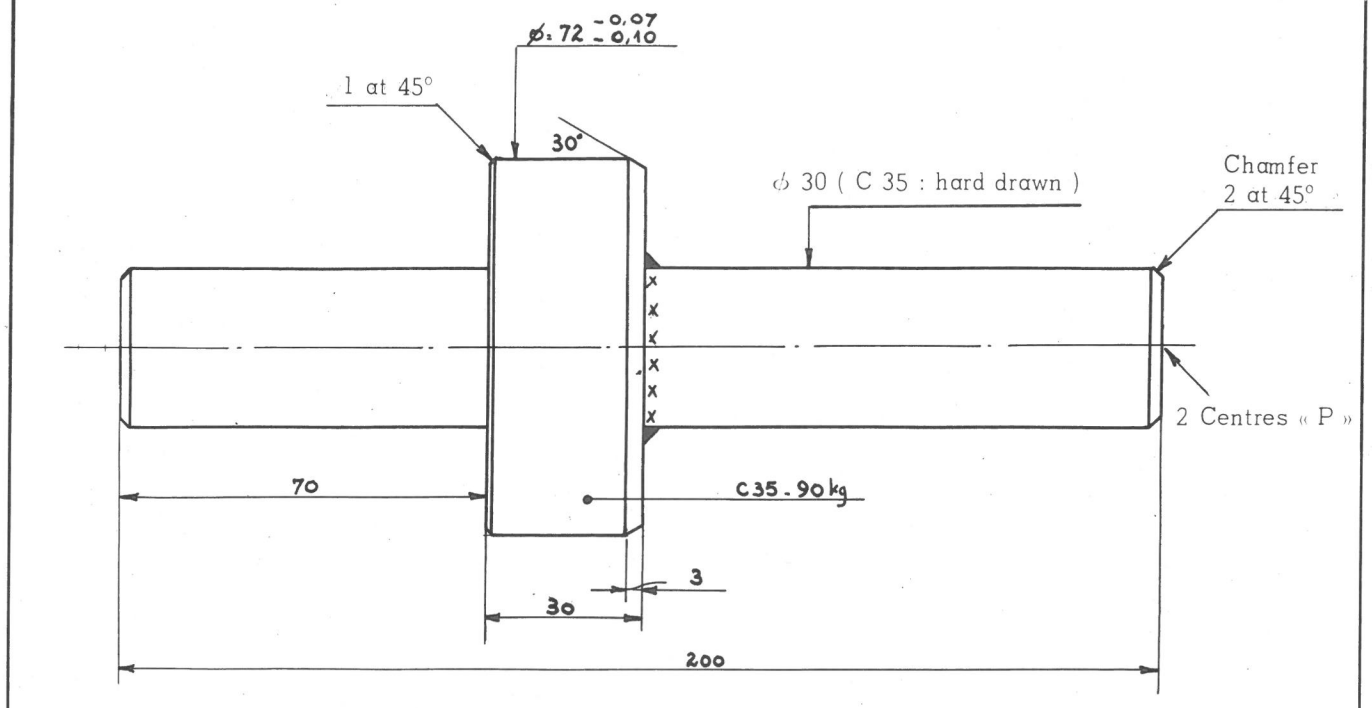

MR. 630-62/11

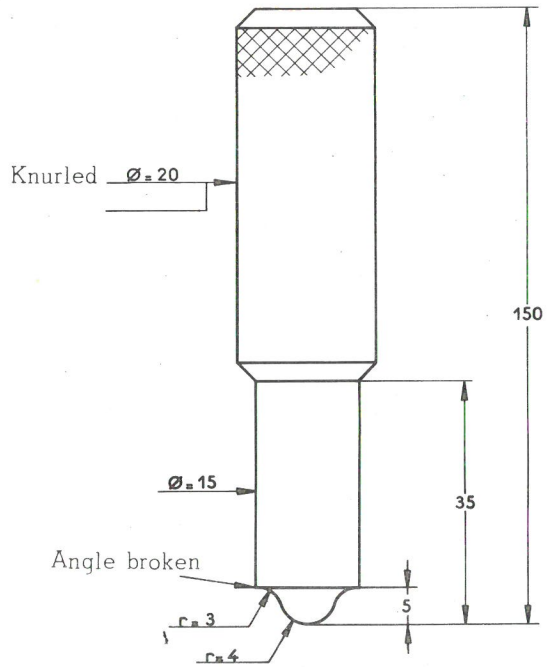

Half hard steel tempered and annealed

MR.630-62/13

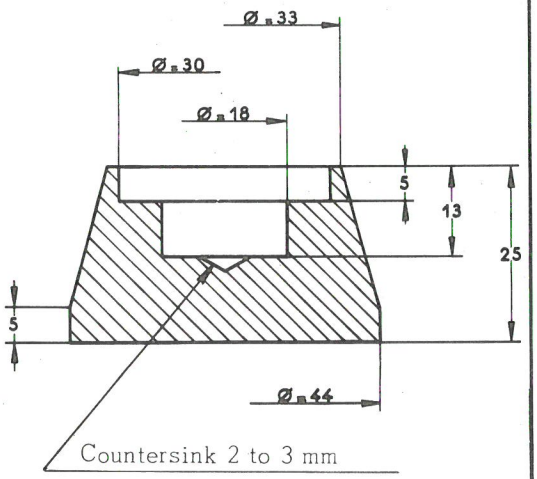

Half hard steel tempered and annealed

MR 630-73 / 16

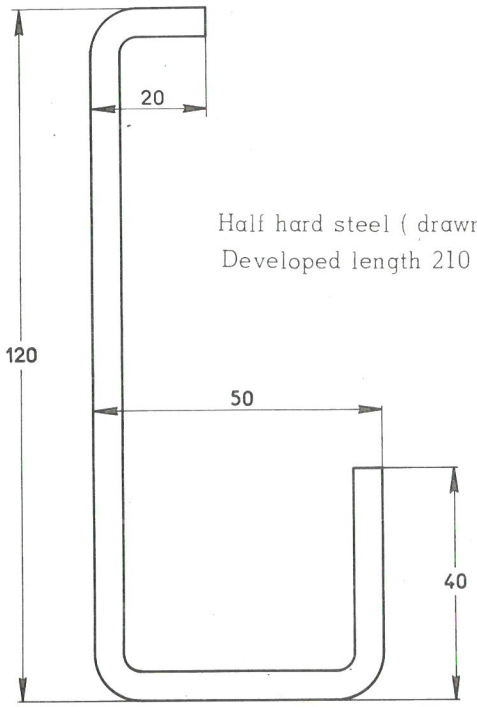

Half hard steel (drawn) ⌀ 5
Developed length 210 approx

MR. 630-35/7

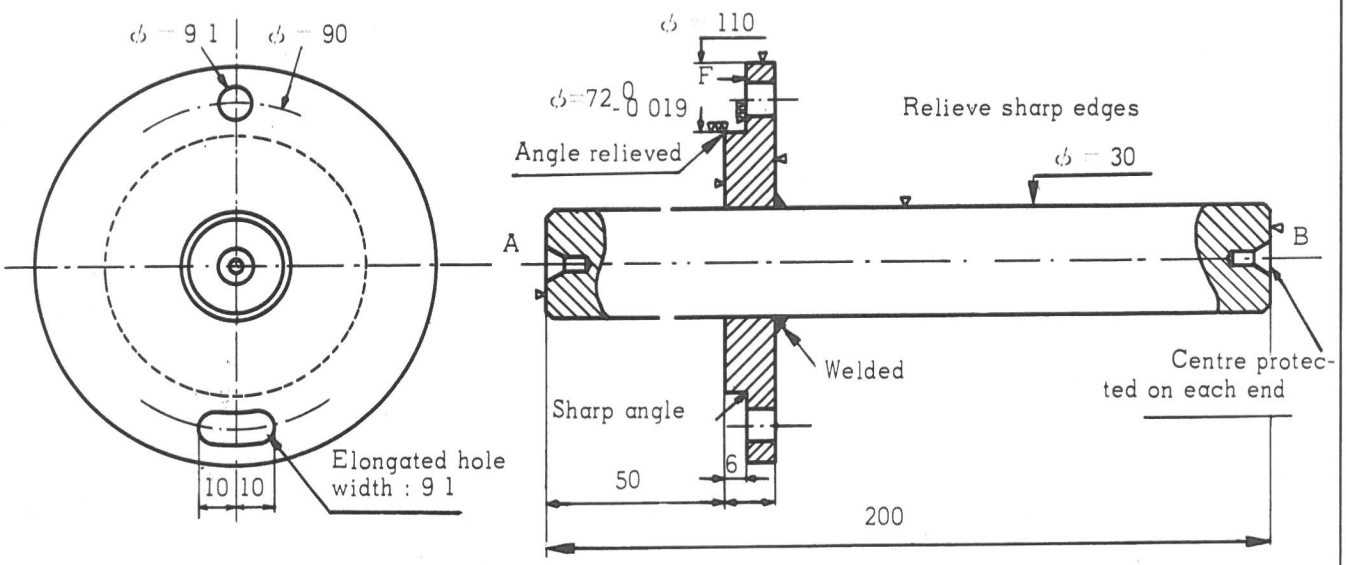

F : max runout 0 02 in relation to ϕ 110

ϕ 72 and AB concentric to 0 02 max

MR. 630-35/11

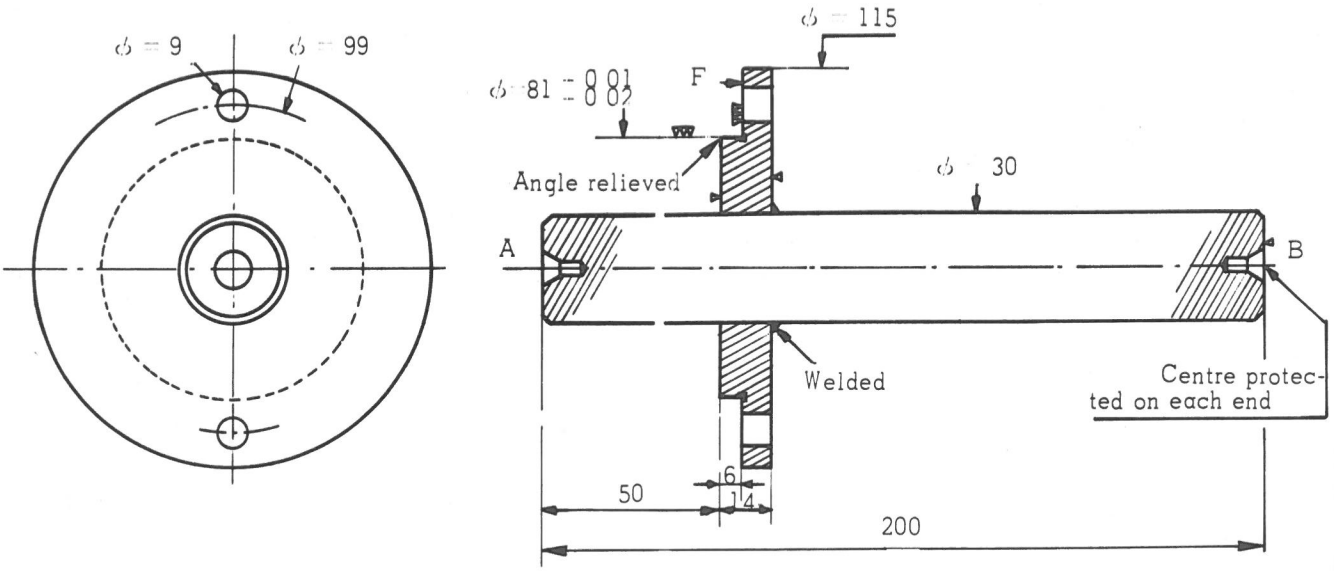

F1 : max runout 0 02 in relation to ϕ 115

ϕ 81 and AB concentric to 0 02 max

MANUAL N° 816-2

THIRD SECTION

ELECTRICAL SYSTEM

THIRD SECTION

LIST OF OPERATIONS
IN THE THIRD SECTION OF THE MANUAL No. 816-2

« A » Vehicles built since 1963 (except AMI 6 and AMI 8)

Operation number	DESCRIPTION
	IGNITION
A. 211-1	Work on the distributor : - Removing and fitting the distributor - Replacement of a cam or of centrifugal timing counter weights
	ELECTRICAL
A. 510-00	General notes on various assemblies of electrical assemblies
AZ. 510-00	Arrangement of the electrical installation *(AZU and AZL 6 volts : (9/1962 → 9/1965) - (AZA and AZ AM 3/1963 → 6/1965)*
AZ. 510-00 a	Arrangement of the electrical installation *(AZ All Types 6 volts : 6/1965 → 4/1967)*
AZ. 510-00 b	Arrangement of the electrical installation *(AZ AM and AZU Option 12 volts - GURTNER heating - 20 : 4/1966 → 2/1970)*
AZ. 510-00 c	Arrangement of the electrical installation *(AZ AM 6 volts : 4/1967 → 2/1970)*
AZ. 510-00 d	Arrangement of the electrical installation *(AZ All Types 12 volts : 2/1970 → 7/1973)*
AZ. 510-00 e	Arrangement of the electrical installation *(AZ All Types 12 volts : 7/1973 →)*
AZ. 510-00 f	Arrangement of the electrical installation *(AZ All Types 9/1974 →)*
◆ AZ. 510-00 g	Arrangement of the electrical installation *(AZ All Types 12 volts 7/1981 →)*
AK. 510-00	Arrangement of the electrical installation *(3 CV Van (AK) 6 volts : 9/1962 → 3/1966)*
AK. 510-00 a	Arrangement of the electrical installation *(3 CV Van (AK) 12 volts : 3/1966 → 5/1968)*
AK. 510-00 b	Arrangement of the electrical installation *(3 CV Van (AK) 12 volts : 5/1968 → 7/1970)*
AK. 510-00 c	Arrangement of the electrical installation *(3 CV Van (AK) 12 volts : 7/1970 → 7/1973)* **NOTE :** For fitting the electrical installation on *(3 CV Van (AK) 12 volts 7/1973 →)* vehicles see Operation AZ. 510-00 e
AY. 510-00	Arrangement of the electrical installation *(Dyane 6 volts : 9/1967 → 3/1968)*
AY. 510-00 a	Arrangement of the electrical installation *(Dyane 12 volts : 9/1967 → 3/1968)*
AY. 510-00 b	Arrangement of the electrical installation *(Dyane 4 (AYA 2) : 3/1968 → 2/1970)* *(Dyane 6 (AYA 3) : 1/1968 → 10/1968)* *(Dyane 6 (AYB) : 10/1968 → 9/1969)*
AY. 510-00 c	Arrangement of the electrical installation *(Dyane 4 (AYA 2) : 2/1970 → 9/1973)* *(Dyane 6 (AYB and AY CB) : 9/1969 → 9/1973)*
AY. 510-00 d	Arrangement of the electrical installation *(Dyane 4 and Dyane 6 : 9/1973 →)*
AY. 510-00 e	Arrangement of the electrical installation *(Dyane 4 and Dyane 6 : 9/1974 →)*
AY. 510-00 f	Arrangement of the electrical installation *(Fourgonnette 3 CV « Acadiane » → 7/1981)*
◆ AY. 510-00 g	Arrangement of the electrical installation *(Dyane and Acadiane 7/1981 →)*
AM. 510-00 f	Arrangement of the electrical installation *(AMI 8 : 9/1974 →)*

Supplement No. 2 to Manual 816-2 (CORR)

LIST OF OPERATIONS
IN THE THIRD SECTION OF THE MANUAL No. 816-2
« A » Vehicles built since 1963 (except AMI 6 and AMI 8)

Operation number	DESCRIPTION
	ELECTRICAL (cont.)
AYM. 510-00	Arrangement of the « Mehari » electrical installation
AYM. 510-00 a	Arrangement of the « Mehari » « Military » type electrical installation (24 volts)
AYM. 510-00 b	Arrangement of the electrical installation *(Mehari 12 volts : 9/1974 ⟶ 7/1978)*
AYM. 510-00 d	Arrangement of the electrical installation *(Méhari 12 volts : 7/1978 ⟶ 7/1981)*
◆ AYM. 510-00 e	Arrangement of the electrical installation *(Mehari 12 volts : 7/1981 ⟶)*
A. 532-1	Removing and fitting the dynamo *(6 volts)*
A. 532-3	Work on the alternator : - Overhauling the alternator
A. 533-3	Work on the starter
A. 540-0	Adjusting the headlamps
A. 560-1	Work on the windscreen wipers
	SAFETY ACCESSORIES
A. 614-00	Fitting the hazard warning system *(Vehicles All Types 6 and 12 volts)*
AZ. 614-00	Fitting the hazard warning system designed for certain models *(AZ All Types 12 volts)*
AY. 614-00	Fitting the hazard warning system designed for certain models *(Dyane 12 volts ⟶ 9/1973)*
AY. 614-00 a	Fitting the hazard warning system designed for certain models *(Dyane All Types : 9/1973 ⟶)*
	TOOLS List of special tools mentionned in the Manual Manufacturing drawings for tools not sold

I. REMOVING AND FITTING A DISTRIBUTOR

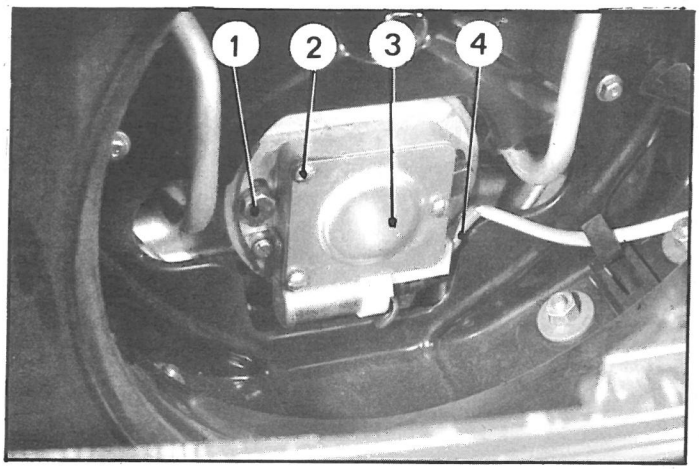

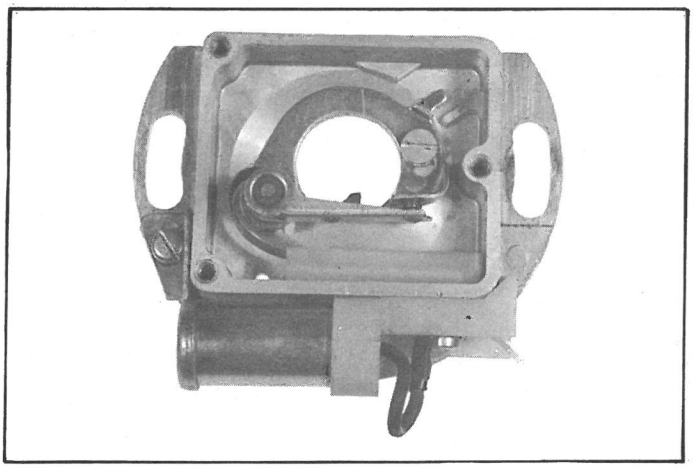

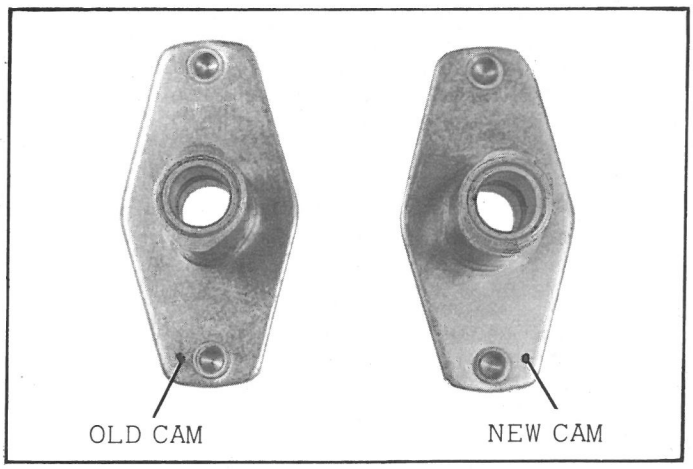

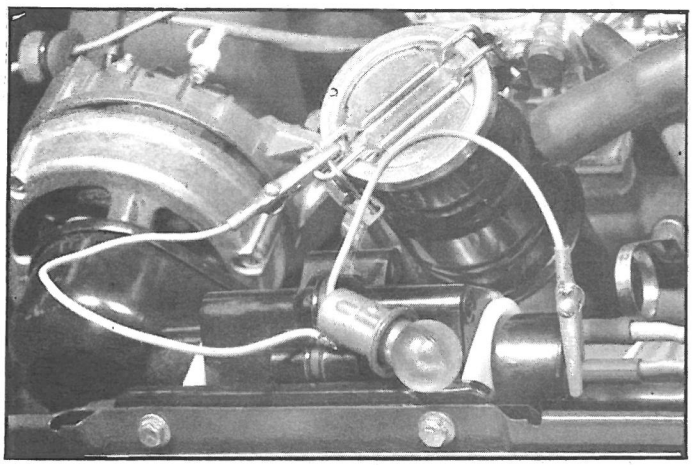

REMOVAL

1. Remove :
   - the protective grille,
   - the radiator grille, (if necessary)
   - the fan (extractor 3006-T bis),
2. Disconnect the lead (4) from the distributor.
3. Remove the cover (3) with its gasket.
4. Remove the two screws (1) and free the distributor.
5. Renew the distributor (if necessary).

FITTING

6. Place the distributor in position and insert screws (1) (flat washer) without tightening them.
7. Oil the spindle of the contact breaker and grease the fibre block which makes contact with the cam (TOTAL MULTIS MS grease).
8. Adjust the contact gap (0.35 to 0.45 mm).
9. Connect the lead (4) to the distributor.
10. **Adjust the ignition setting :**
    a) Insert the pin for initial ignition setting (timing pin) MR. 630-51/15 in the hole of the crankcase of the left-hand side and insert it in the hole on the engine flywheel.
    b) Connect a warning lamp between the positive terminal of the coil and earth.
    Disconnect the leads from the sparking plugs.
    Switch on the ignition and find the point at which the warning lamp lights, by turning the distributor in the appropriate direction.
    Tighten the screws (1).
    c) Remove the timing pin and turn the crankshaft one complete revolution. At the point where the warning lamp lights, timing pin should fit into the hole of the engine flywheel.
    If the hole has gone beyond pin, the ignition is retarded.
    In this case, readjust on that cylinder.
    The difference between the two cylinders should not exceed 3° (1. 1/2 teeth on the flywheel).
    If the difference is greater, renew the cam.
    d) Switch off the ignition, disconnect the warning lamp and connect the sparking plug leads.
11. Fit the cover (3) with its gasket. Tighten the three screws (2).
12. Fit the fan, the protective grille (inner), and the outer grille.

II. REPLACEMENT OF A CAM OR CENTRIFUGAL ADVANCE WEIGHTS

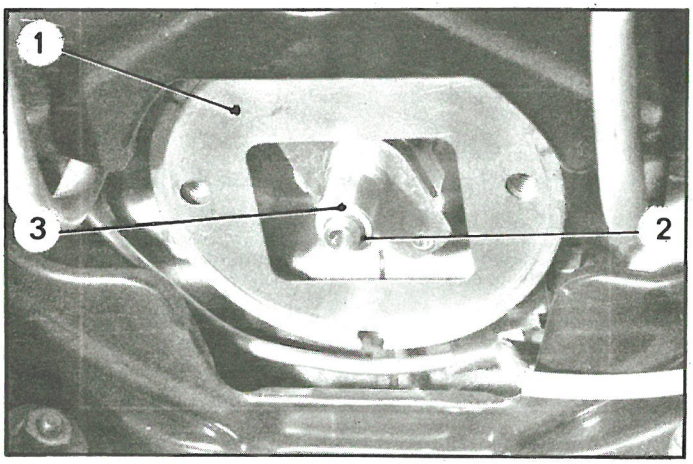

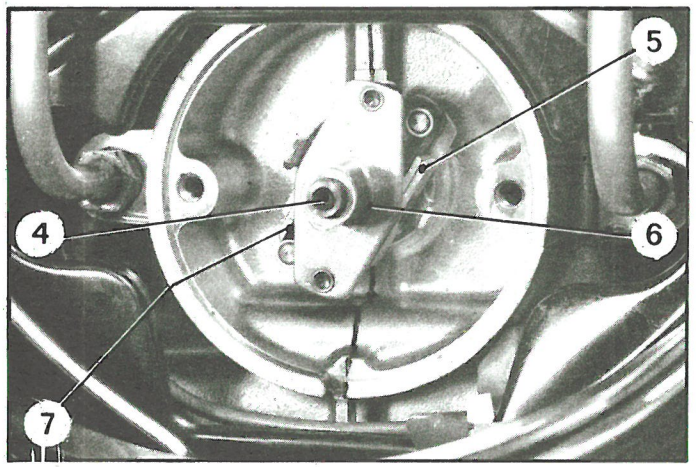

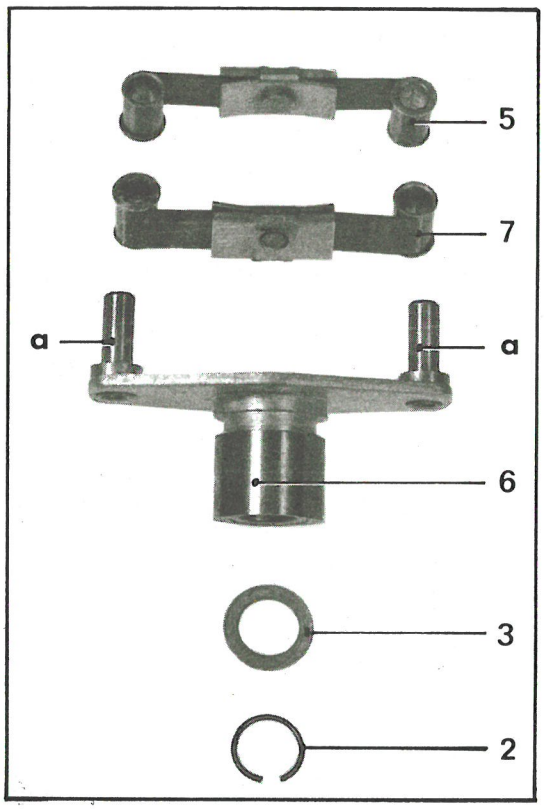

REMOVAL

1. Remove the distributor
   (See chapter I).

2. Remove the protection plate (1).

3. Remove the circlip (2).

4. Free :
   - the thrust washer (3),
   - the cam (6),
   - the two advance weights (5) and (7).

5. Clean all the parts.
   If the weights are to be renewed, replace them with identical type weights.

FITTING

6. Lightly oil :
   - the spindle (4) of the cam support,
   - the advance weight spindles « a » on the cam support bracket and on the drive plate.

7. Fit the advance weights (5) and (7) on their spindles « a » on the cam support bracket and position this assembly on the spindle (4), setting the advance weights on their spindles on the drive plate.

   NOTE : Position the advance weights as shown on photograph.

8. Position on the spindle (4) :
   - the thrust washer (3),
   - circlip (2).

9. Fit the protection plate (1).

10. Fit the distributor :

    (See chapter I).

ARRANGEMENT OF THE ELECTRICAL INSTALLATION
(General notes)

PRESENTATION

These operational notes comprise :
- a schedule of bulbs,
- a schedule of fuses,
- a wiring diagram,
- a circuit diagram,
- a parts identification,
- a harness identification.

USE OF THE DIAGRAMS

The wiring diagram shows the position of the wires in harnesses and the approximate location of electrical parts on the vehicle.
The circuit diagram indicates the functions of the various circuits, and is primarily designed to assist in tracing faults. Certain components which have several functions on various circuits are shown in « exploded » form.

Key to identification coding :
The key is the same for both wiring diagram and circuit diagram.
Parts are identified on the circuit diagram by numbers in bold type. These numbers are indexed in the parts list, and opposite each part is given the vertical line in the circuit diagram along which each part can be located, according to its number.
Harnesses are identified by capital letters in bold type.
On the circuit diagram, the principal (front) harness is not normally identified.
Colour of wires and wire terminals are identified by letters in small type, as indicated in the colour code.
Colour code only indicates colour of terminal (e,g., Mv = Mauve terminal).
Coulour code preceded by the letter F indicates colour of wire (e.g., F.Ve = green wire).
These two forms of identification can be used together (e.g., F.Ve Mv = green wire with mauve marking).
Where there is no risk of confusion, wires are not identified.
In some cases, these codes are followed by an arbitrary number ; this number is for identification of wires and is not an actual mark of the wire.
Only colours of wires relate to colours actually used in the wiring on the vehicle.
Symbols for the main components appearing on the circuit diagram are as shown below.

KEY TO SYMBOLS

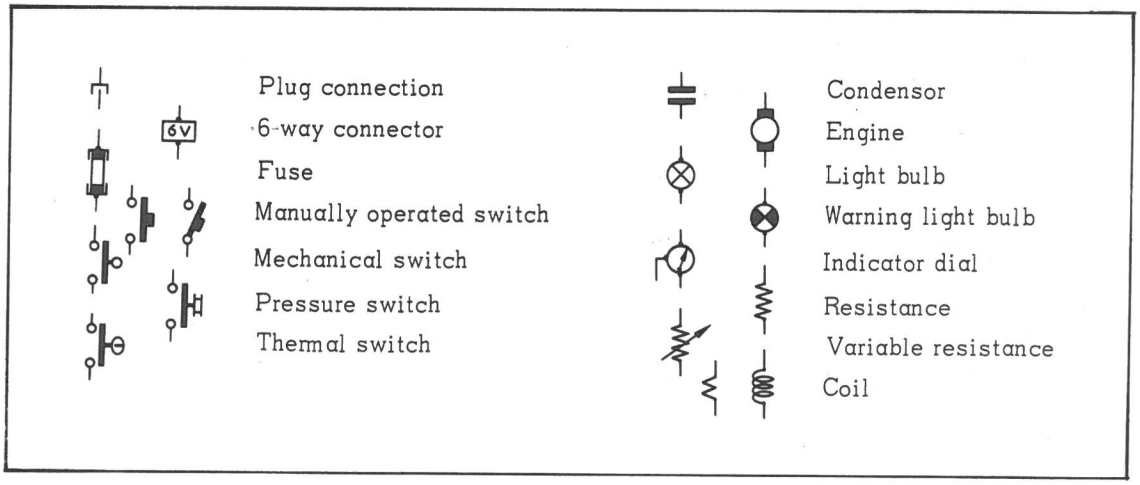

TABLE OF BULBS

Use	Quantity	Base	Type	Voltage	Power	French Standard
Headlamps, main beam, dipped beam	2	BA 21 d	Yellow selective	6 V	36/36 W	R 136-02
Direction indicators	2	BA 15 s	Round-glass bulb (big size)	6 V	18/4 W	R 136-11
Stop lamps	2	BA 15 s	Round-glass bulb (big size)	6 V	15 W	R 136-09
Interior lamps	1	Festoon		6 V	7 W	R 136-05
Front sidelamps and tail lamps	4	Festoon		6 V	7 W	R 136-05
Charge warning lamp Speedometer lamp	2b	BA 9 s		6 V	1.5 W	R 136-04

OPERATION N° AZ. 510-00 : *Arrangement of the electrical installation.*
(AZU and AZL 6 volts 9/ 1962 ⟶ 6/ 1965 - AZA and AZAM 3/ 1963 ⟶ 6/ 1965)

WIRING DIAGRAM

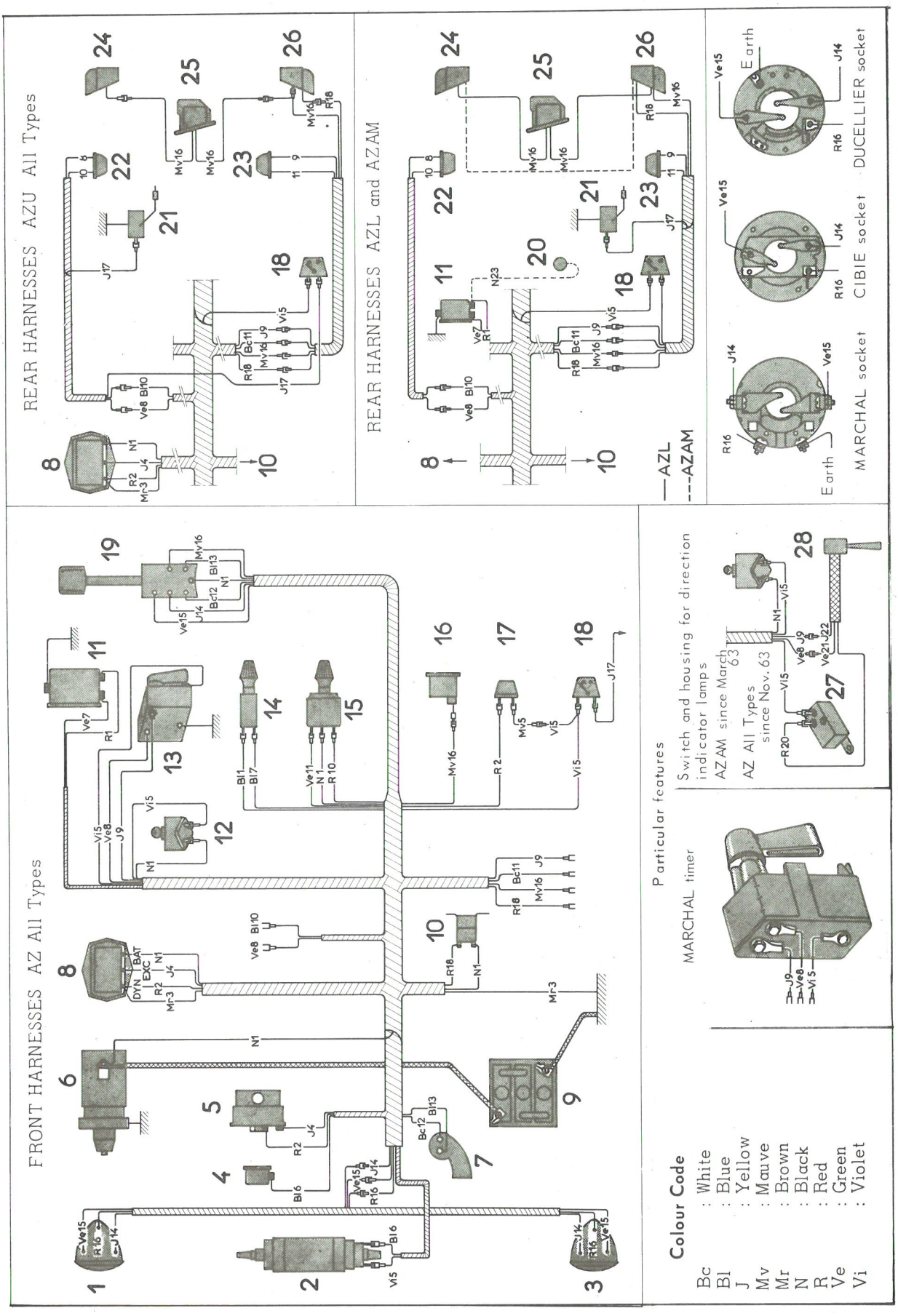

CIRCUIT DIAGRAM

P T O

CIRCUIT DIAGRAM

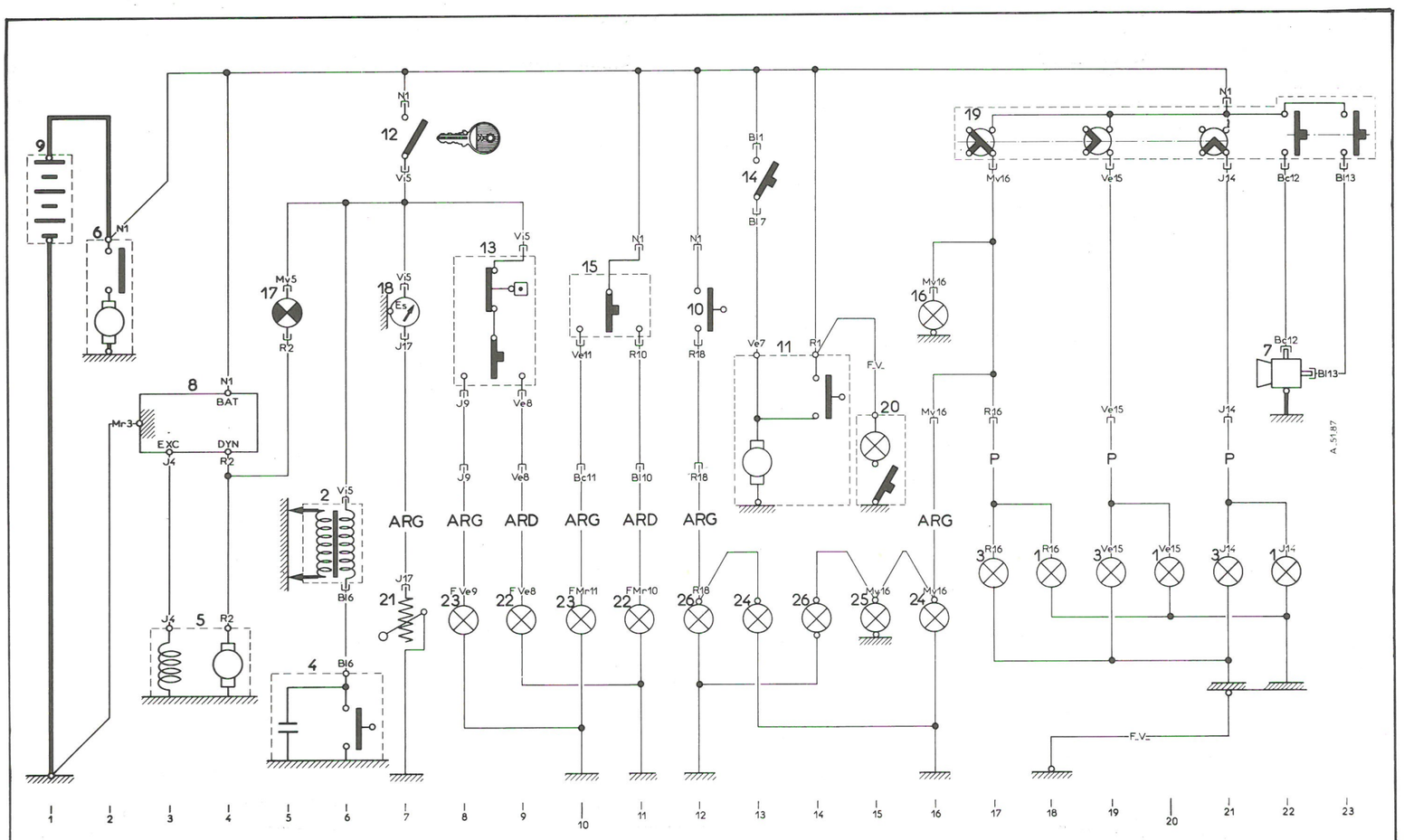

Ref.	Description	Position
1	Headlamp, front, right-hand :	
	- Main beam	22
	- Dipped beam	20
	- Sidelamp	18
2	Ignition coil	6
3	Headlamp, front, left-hand :	
	- Main beam	21
	- Dipped beam	17
	- Sidelamp	19
4	Distributor	6
5	Dynamo	3 - 4
6	Starter	2
7	Horn (Town and country)	22-23
8	Regulator	3 - 4
9	Battery	1
10	Stop lamp switch	12
11	Windscreen wiper motor	13-14
12	Distributor switch	7
13	Direction indicator switch	8 - 9

Ref.	Description	Position
14	Windscreen wiper switch	13
15	Switch for parking lamps	10-11
16	Speedometer light	16
17	Charge warning lamp	5
18	Fuel gauge	7
19	Switch for lighting and horn	9-11
20	Interior lamps *(AZAM and AZU)*	15
21	Fuel gauge rheostat	7
22	Lamp for direction indicator and parking, R.H	9-11
23	Lamp for direction indicator and parking, L.H	8-10
24	Rear, side and stop lamp R.H *(AZAM)*	16-13
25	Number plate lamp, rear *(AZL - AZA - AZAM → 3/1964)*	15
26	Rear, side and stop lamp, L.H	14-12
27	Flasher unit *(AZAM)* see ref. **13**	8
28	Direction indicator switch *(AZAM)* see ref. **13**	8

IDENTIFICATION OF WIRING HARNESSES

Without mark	Front	**AR.D**	Rear, R.H.
		P	Headlamp
AR.G	Rear, L.H.	**F.V.**	Jumper lead

NOTE : *Ref.* = Identification N° of component on circuit diagram and wiring diagram.
Position = Figure of vertical line numbered along lower edge on circuit diagram.

TABLE OF BULBS

Use	Quantity	Base	Voltage	Power	Type	French Standard
Headlamps main beam, dipped beam	2	BA. 21 d	6 V	36/ 36 W	Yellow selective	R.136.02
Stop and parking lamps	4	BA. 15 s	6 V	15 W	Round-glass bulb (big size)	R. 136-09
Interior lamp	1	Festoon	6 V	7 W		R.136-05
Front sidelamps and tail lamps	4	Festoon	6 V	4 W		R.136-05
Charge warning lamp Speedometer lamp	2	BA. 9 s	6 V	1.5 W		R.136-04

OPERATION N° AZ. 510-00 a : *Arrangement of the electrical installation.*
(AZ All Types 6 volts 6/1965 ⟶ 4/1967)

A.51-10

WIRING DIAGRAM

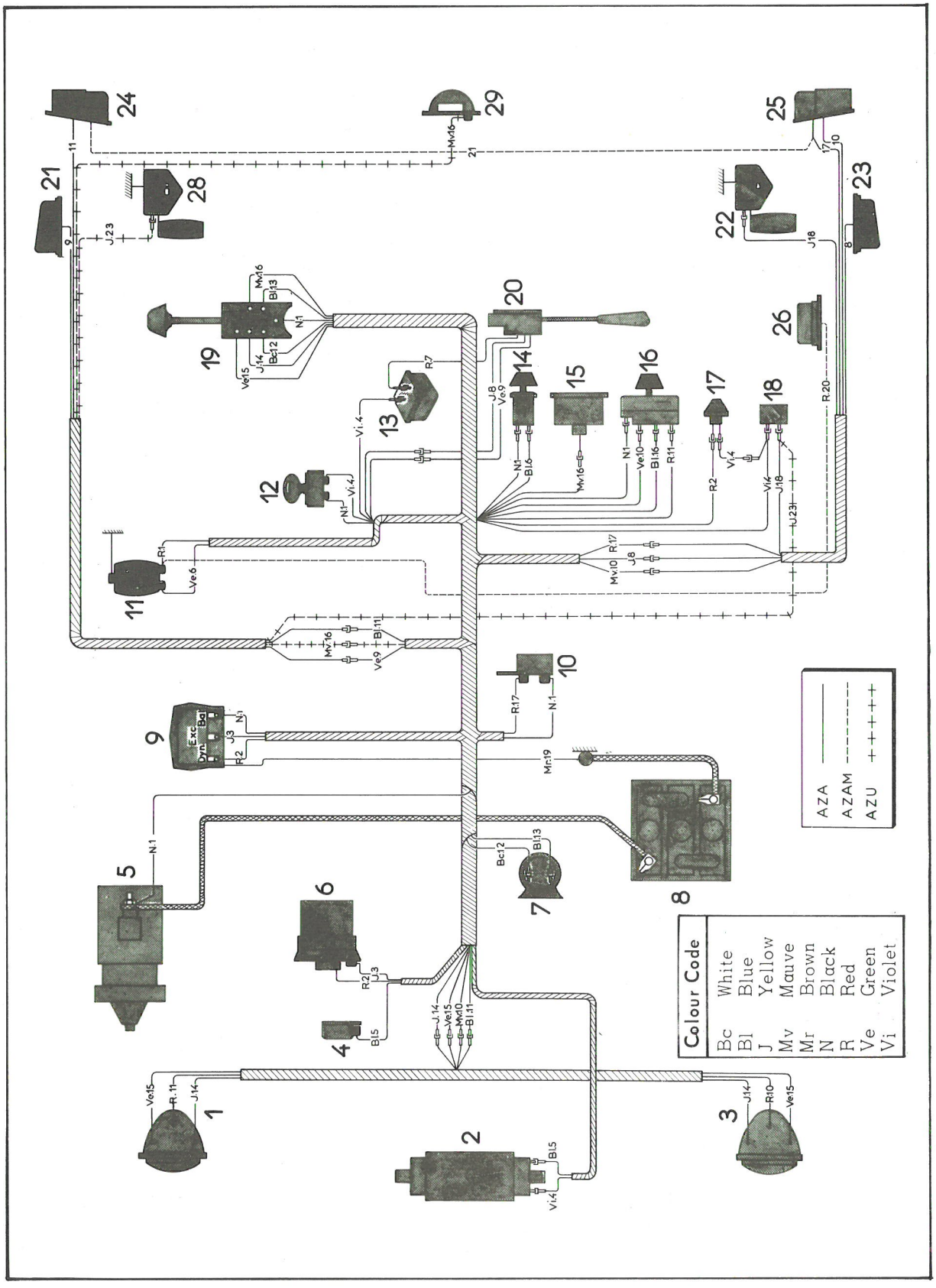

CIRCUIT DIAGRAM

P.T.O.

CIRCUIT DIAGRAM

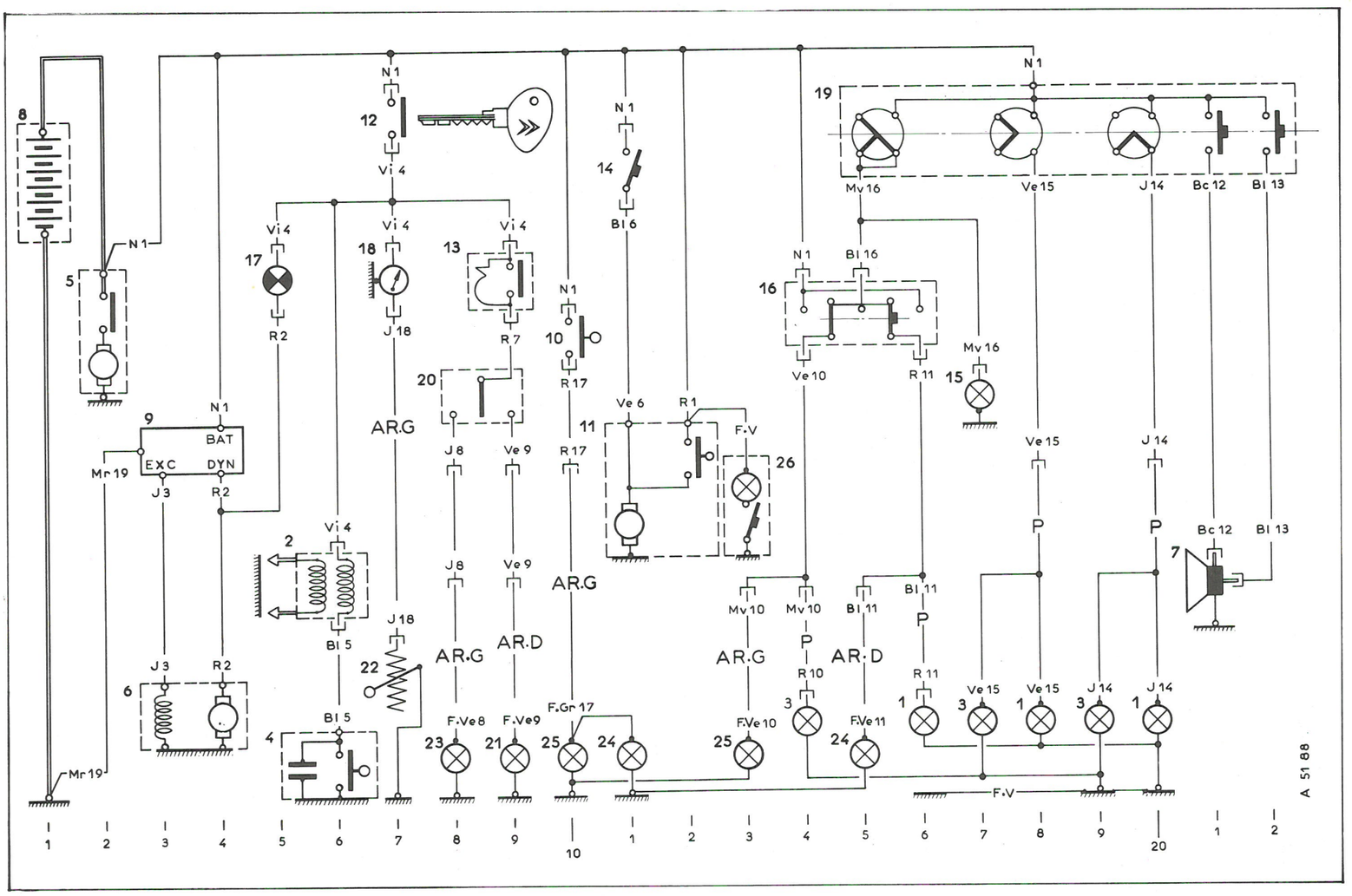

IDENTIFICATION OF PARTS

Ref.	Description	Position	Ref.	Description	Position
1	Headlamp, front, right-hand :		15	Speedometer light	17
	- Main beam	20	16	Switch for parking lamps	- 15
	- Dipped beam	18	17	Charge warning lamp	5
	- Sidelamp	16	18	Fuel gauge	7
2	Ignition coil	6	19	Switch for lighting and horn	15 to 22
3	Headlamp, front, left-hand :		20	Direction indicator switch	8 - 9
	- Main beam	19	21	Lamp for direction indicator, R.H.	9
	- Dipped beam	17	22	Fuel gauge rheostat	7
	- Sidelamp	14	23	Lamp for direction indicator, L.H.	8
4	Distributor	6	24	Rear lights unit (R.H.) :	
5	Starter	2		- Tail lamp - Stoplamp	15 and 11
6	Dynamo	3-4	25	Rear lights unit (L.H.)	
7	Horn (Town and country)	21		- Tail lamp - Stoplamp	13 and 10
8	Battery	1	26	Interior lamps *(AZAM)*	13
9	Regulator	3-4	28	Fuel gauge rheostat *(AZU All Types)* see ref. **22**	7
10	Stop lamp switch	10	29	Number plate lamp, rear *(AZU All Types)*	
11	Windscreen wiper motor	11-12		See ref. **15**	17
12	Distributor switch	7			
13	Flasher unit	9			
14	Windscreen wiper switch	11			

IDENTIFICATION OF WIRING HARNESSES

Without mark	Front	**P**	Headlamp
ARG	Rear, L.H.	**F.V.**	Jumper lead
ARD	Rear, R.H.		

TABLE OF BULBS

Use	Quantity	Base	Type	Voltage	Power	French Standard
Headlamps main beam, dipped beam	2	BA. 21 d	Yellow selective	12 V	36/36 W	R.136-02
Direction indicators Stop lamps	4	BA. 15 s	Round-glass bulb (big size)	12 V	15 W	R.136-09
Side and tail lamps	4	Festoon		12 V	4 W	R.136-05
Interior lamp	1	Festoon		12 V	1.5 W	R.136-05
Charge warning lamp Speedometer lamp	2	BA. 9 s		12 V	1.5 W	R.136-04

TABLE OF FUSES

Current supply	Capacity	Colour	Equipment protected
Switch for lighting	10 A	Yellow	Instrument panel lighting Switch for parking lamp → Side and tail lamps Number plate lamp
« + » Battery	16 A	Green	Switch → Windscreen wiper motor Switch → Stop lamps Switch → Ignition coil → Direction indicators → Charge warning lamp → Fuel gauge

GURTNER HEATING (Option)

« + » Battery	10 A	Green Yellow	Gurtner heating
« + » Battery	16 A	Green Blue	Switch → Gurtner heating (Blower) → Ignition coil → Direction indicators → Charge warning lamp → Fuel gauge Switch → Windscreen wiper motor Switch → stoplamps
Lighting switch	10 A	Mauve Red	Instrument panel lighting Switch → Stop lamps, front and rear Number plate lighting

OPERATION N° AZ. 510-00 b : *Arrangement of the electrical installation.*
(AZAM and AZU option 12 volts Gurtner heating - 20 4/ 1966 ⟶ 2/ 1970)

A.51-11

WIRING DIAGRAM

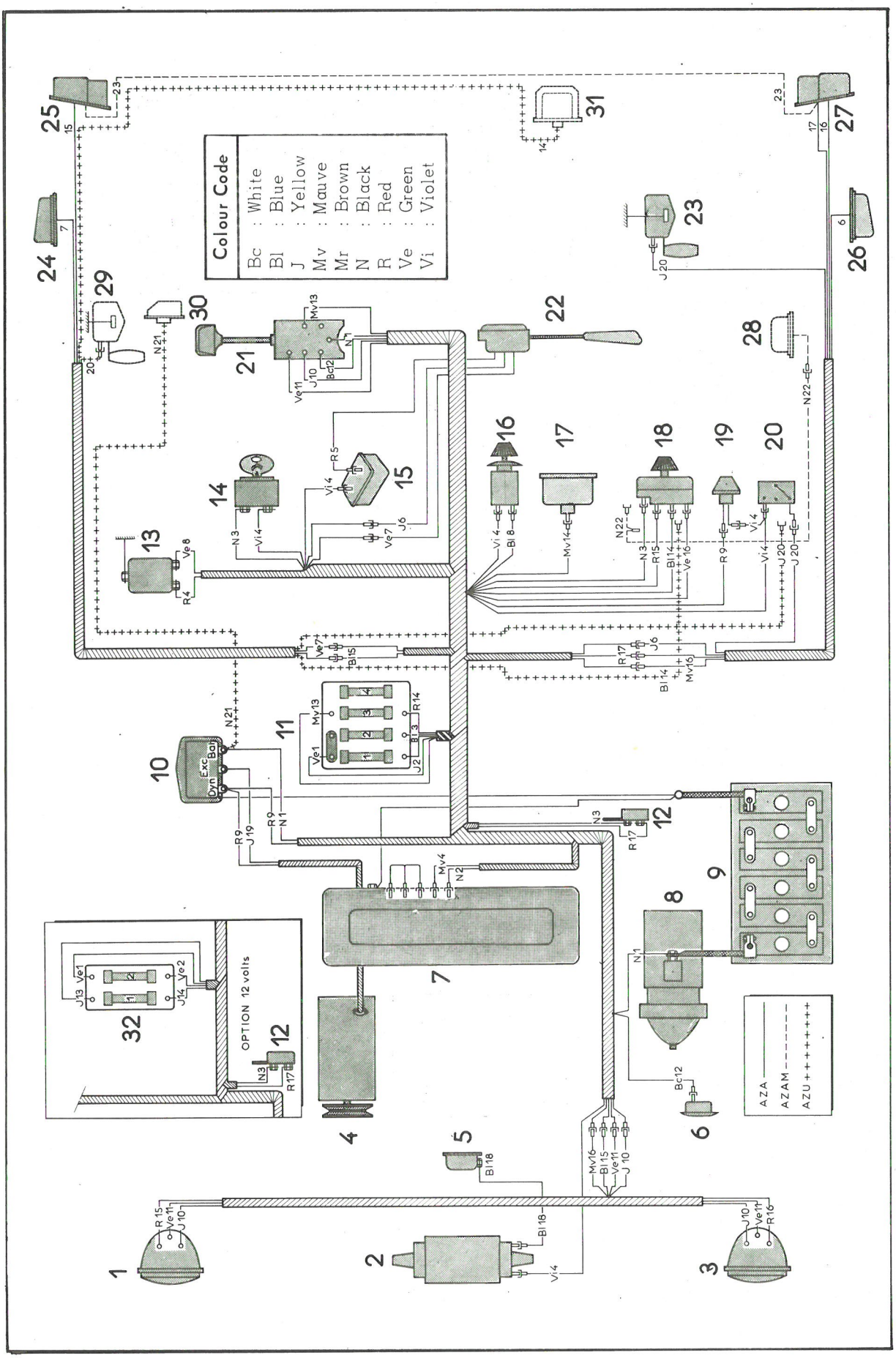

CIRCUIT DIAGRAM

P.T.O.

CIRCUIT DIAGRAM

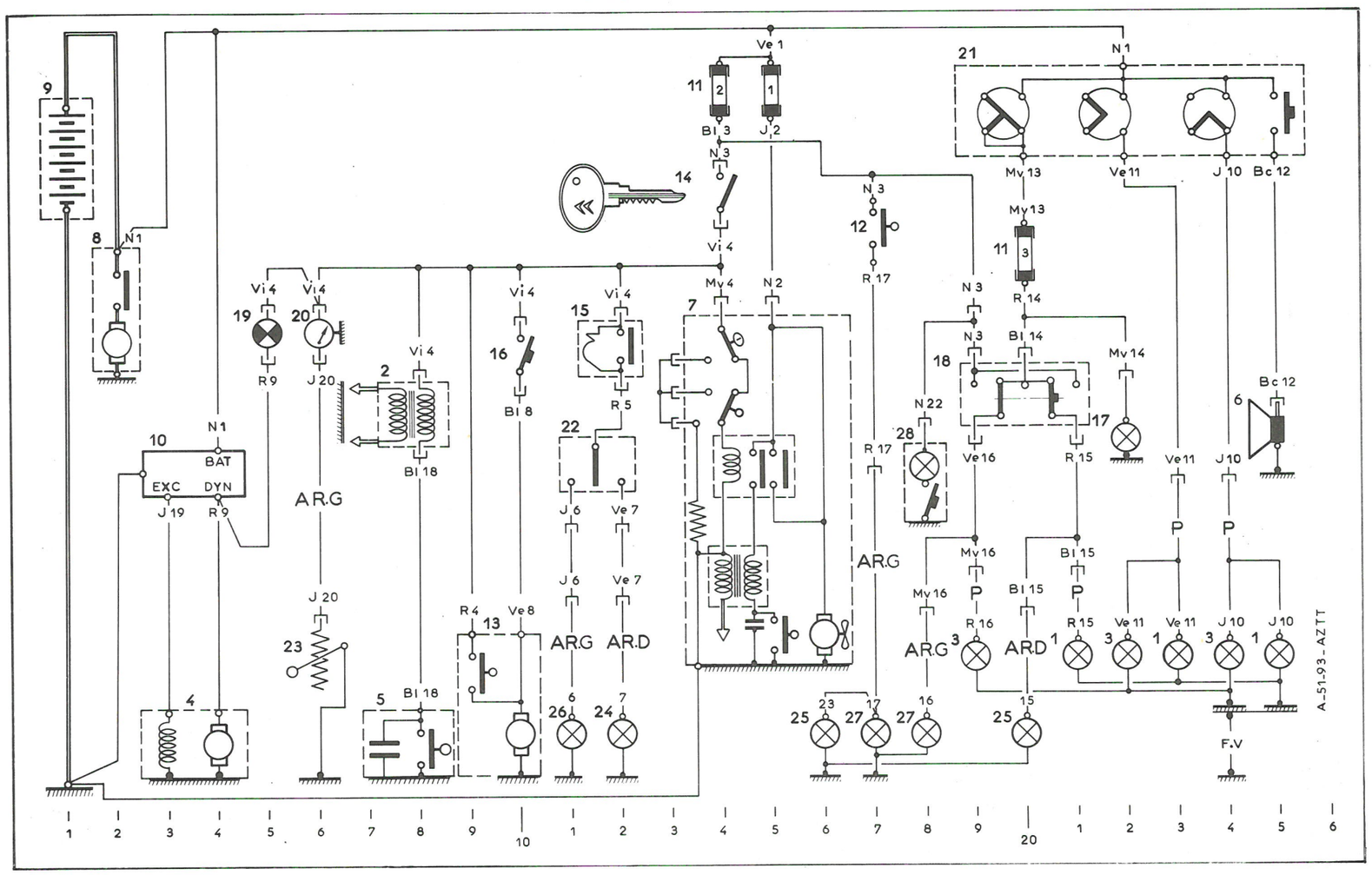

IDENTIFICATION OF PARTS

Ref.	Description	Position	Ref.	Description	Position
1	Headlamp, , right-hand :		15	Flasher unit	12
	- Main beam	25	16	Windscreen wiper switch	10
	- Dipped beam	23	17	Speedometer light	22
	- Sidelamp	21	18	Switch for parking lamps	19 to 21
2	Ignition coil	7-8	19	Charge warning lamp	5
3	Headlamp, left-hand :		20	Fuel gauge	6
	- Main beam	24	21	Switch for lighting and horn	20 to 25
	- Dipped beam	22	22	Direction indicator switch	11 - 12
	- Sidelamp	19	23	Fuel gauge rheostat	6
4	Dynamo	3 - 4	24	Lamp for direction indicator, R H.	12
5	Distributor	7-8	25	Rear, side lamp R.H. (and stop lamp AZAM)	20 - 16
6	Horn	25	26	Lamp for direction indicator, L H.	11
7	Gurtner heating system - 20	13 to 16	27	Rear, side and stop lamp, L H.	18 - 17
8	Starter	2	28	Interior lamp (*AZAM*)	18
9	Battery	1	29	Fuel gauge rheostat (*AZU*) see ref. **23**	6
10	Regulator	3 - 4	30	Interior lamp (*AZU*) see ref **28**	18
11	Fuse box	14 - 15 - 20	31	Number plate lamp (*AZU*) see ref. **17**	22
12	Stoplamp switch	17	32	Fuse box (*option 12 volts*) see ref. **11**	14 -20
13	Windscreen wiper motor	9 - 10			
14	Distributor switch	14			

IDENTIFICATION OF WIRING HARNESSES

Without mark	Front	**P**	Headlamp
AR.G	Rear, L.H.	**F.V**	Jumper lead
AR.D	Rear, R.H.		

TABLE OF BULBS

Use	Quantity	Base	Type	Voltage	Power	French Standard
Headlamps, main beam dipped beam	2	BA. 21 d	Yellow selective	6 V	36/36 W	R. 136-02
Direction indicators Stoplamp	6	BA. 15 s	Round-glass bulb (big size)	6 V	15 W	R. 136-09
Interior lamp	1	Festoon		6 V	7 W	R. 136-05
Side and tail lamps	4	Festoon		6 V	4 W	R. 136-05
Charge warning lamp Speedometer lamp	2	BA.9 s		6 V	1.5 W	R. 136-04

OPERATION N° AZ. 510-00 c : *Arrangement of the electrical installation.*
(AZAM 6 volts 4/1967 ⟶ 2/1970).

WIRING DIAGRAM

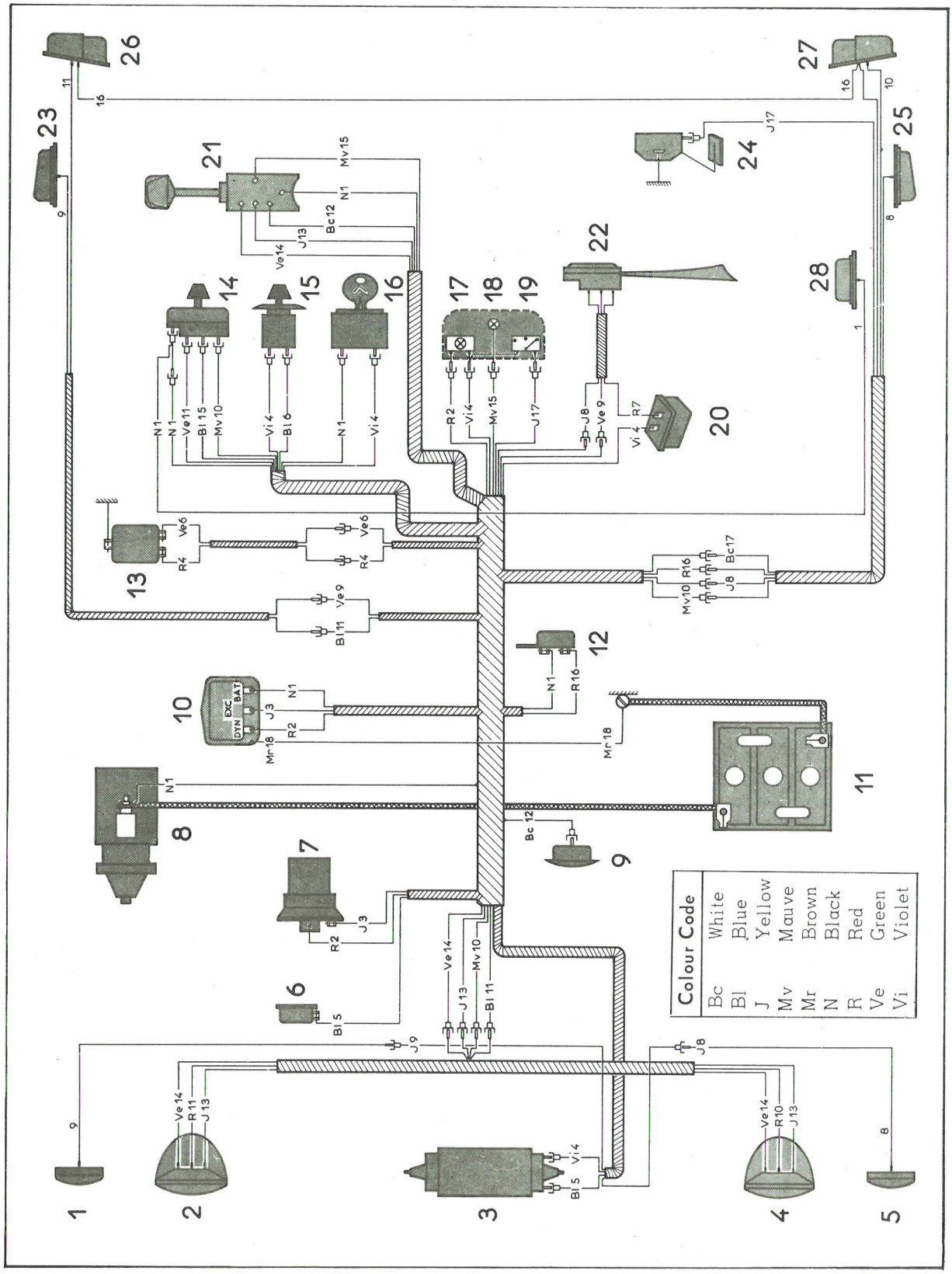

CIRCUIT DIAGRAM

P.T.O.

CIRCUIT DIAGRAM

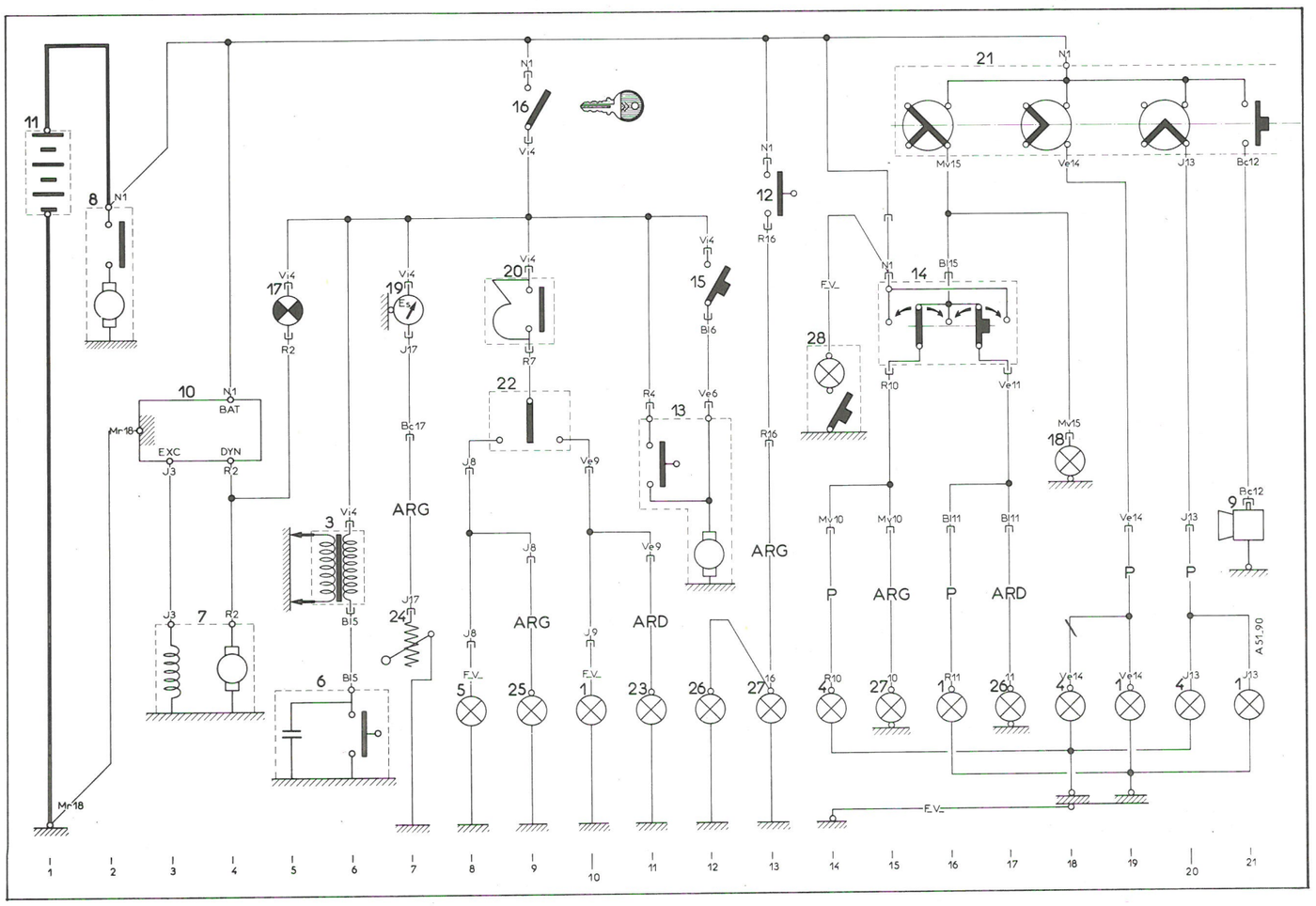

IDENTIFICATION OF PARTS

Ref.	Description	Position
1	Front direction indicator, right-hand	10
2	Headlamp, right-hand :	
	- Main beam	21
	- Dipped beam	19
	- Sidelamp	16
3	Ignition coil	6
4	Headlamp, left-hand :	
	- Main beam	20
	- Dipped beam	18
	- Sidelamp	14
5	Front direction indicator, left-hand	8
6	Distributor	6
7	Dynamo	3 - 4
8	Starter	2
9	Horn	21
10	Regulator	3 - 4
11	Battery	1

Ref.	Description	Position
12	Stoplamp switch	13
13	Windscreen wiper motor	11-12
14	Switch for parking lamps	15-17
15	Windscreen wiper switch	12
16	Distributor switch	9
17	Charge warning lamp	5
18	Speedometer light	18
19	Fuel gauge	7
20	Flasher unit	9
21	Switch for lighting and horn	16 to 21
22	Switch for direction indicator	9
23	Lamp for direction indicator, rear, R.H.	11
24	Fuel gauge rheostat	7
25	Lamp for direction indicator, rear L.H.	9
26	Rear lights unit (R.H.) :	
	- Tail lamps and stoplamps	12 and 17
27	Rear lights unit (L.H.) :	
	- Tail lamps and stop lamps	13 and 15
28	Interior lamp	14

IDENTIFICATION OF WIRING HARNESSES

Without mark	Front	P	Headlamp
ARD	Rear, R.H.	F.V	Jumper lead
ARG	Rear, L.H.		

TABLE OF BULBS

Description	Number	Cap	Type	Voltage	Power	French Standard ref.
Headlamps, dipped/ main beam	2	P. 45 t. 41	Selective yellow	12 V	45/40 W	R. 136-15
Direction indicator lamps Stop	6	BA 15s/19	Pear-shaped	12 V	21 W	R. 136-12
Front sidelamps	2	BA 9s		12 V	4 W	R. 136-33
Tail lamps	2	BA.15s/19		12 V	5 W	R.136-13
Interior lamp	1	BA 15 s		12 V	7 W	R.136-08
Dashboard lighting	1	BA 9 s		12 V	2 W	R.136-34
Oil pressure warning lamp	1	BA 9 s		12 V	1.5 W	R.136-04

TABLE OF FUSES

Feed	Type	Colour	Units protected
Lighting switch	10 A	Red	Dashboard lighting Parking lamp switch ⟶ Sidelamps and tail-lamps
« + » Battery	10 A	Yellow	Interior lamp Brake lamp switch ⟶ Stop lamps
Ignition switch	16 A	Blue	Windscreen wiper motor switch Engine oil pressure warning lamp (AZKA) Flasher unit ⟶ reversing switch ⟶ direc. indicators Indicator ⟶ Petrol gauge rheostat Thermal voltmeter Voltage regulator
Spare	16 A		

WIRING DIAGRAM

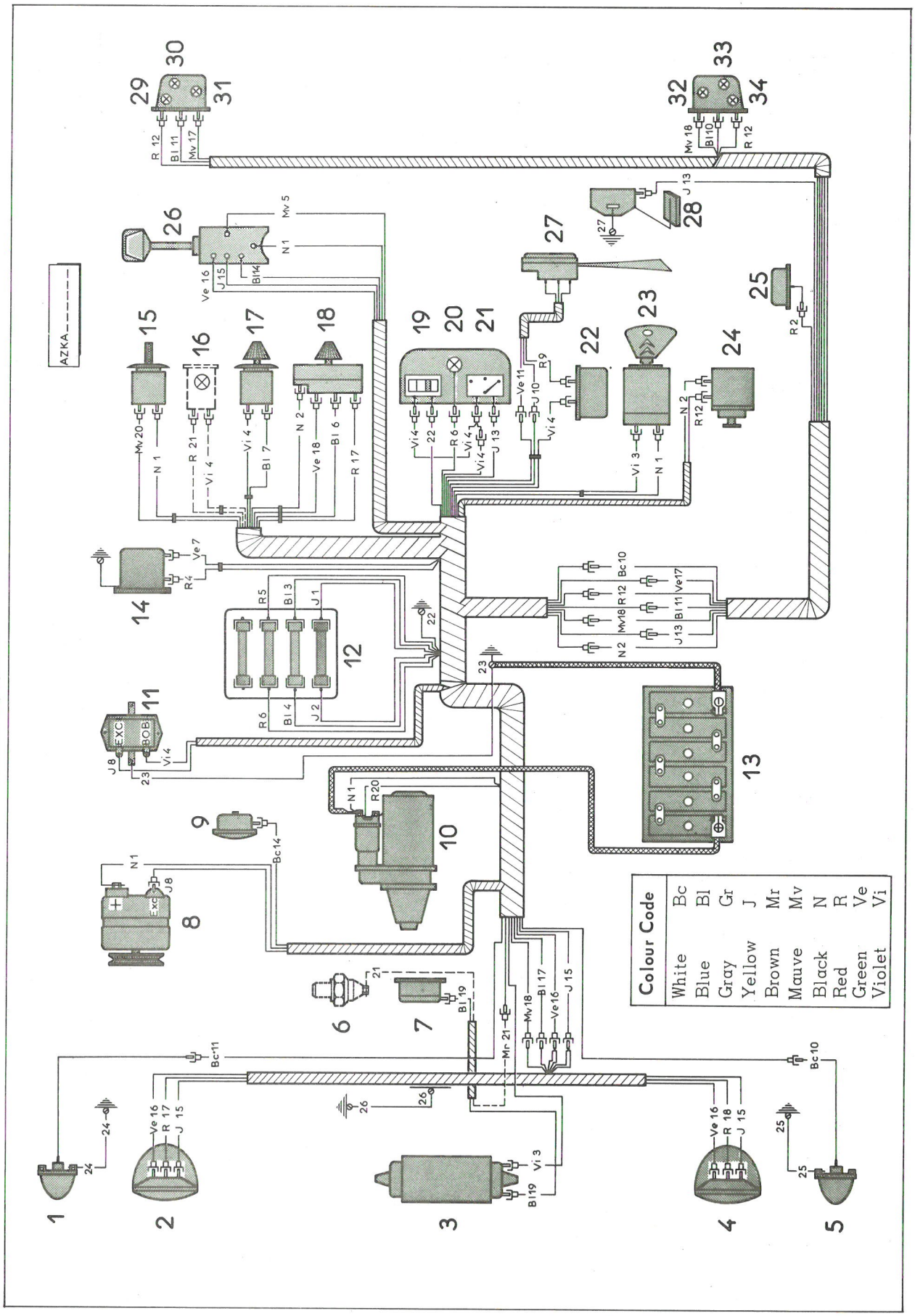

CIRCUIT DIAGRAM

P.T.O.

CIRCUIT DIAGRAM

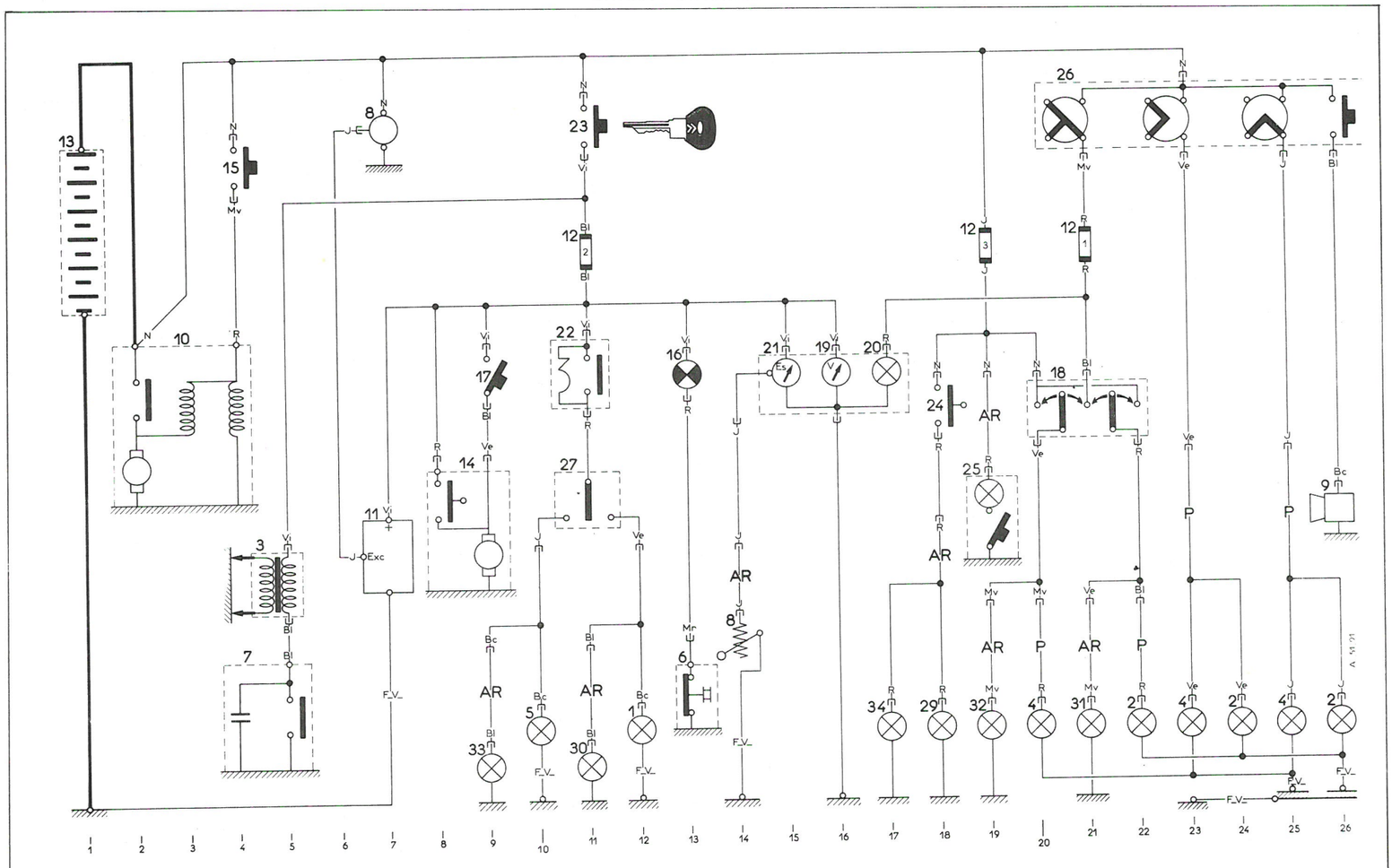

IDENTIFICATION OF PARTS

Ref.	Description	Position	Ref.	Description	Position
1	Direction indicator lamp, front right-hand	12	15	Starter switch	4
2	Headlamp front, right-hand :		16	Oil pressure warning lamp (AZKA)	13
	- Headlamp, main beam	26	17	Windscreen wiper switch	9
	- Headlamp, dipped beam	24	18	Parking lamp switch	21
	- Side lamp	22	19	Thermal voltmeter	16
3	Ignition coil	5	20	Dashboard lighting	17
4	Headlamp left-hand :		21	Petrol gauge	15
	- Main beam	25	22	Flasher unit	11
	- Dipped beam	23	23	Ignition switch	11
	- Side lamp	20	24	Stop lamp switch	18
5	Direction indicator lamp, front left-hand	10	25	Interior lamp	19
6	Engine oil switch (AZKA)	13	26	Lighting and horn switch	21 to 26
7	Distributor	5	27	Side lamp switch	11
8	Alternator	7	28	Petrol gauge theostat	14
9	Horn	26	29	Right-hand rear stop lamp	18
10	Starter	3	30	Direction indicator lamp, rear right-hand	11
11	Voltage regulator	7	31	Number plate lamp, rear, right-hand	21
12	Fuse box	21-19-11	32	Number plate lamp, rear left-hand	19
13	Battery	1	33	Direction indicator lamp, rear left-hand	9
14	Windscreen wiper motor	9	34	Stop lamp left-hand	17

IDENTIFICATION OF HARNESSES

Without mark	Main front harness	P	Headlamp harness
AR	Rear harness	F.V	Jumper lead

TABLE OF BULBS

Description	Quantity	Base	Type	Voltage	Power	French Standard ref.
Headlamps, Dipped/ Main beam	2	P. 45 t. 41	Selective yellow	12 V	45/40 W	R. 136-15
Direction indicator lamps Stop lamps	6	BA. 15s/19	Pear shaped	12 V	21 W	R. 136-12
Sidelamps	2	BA. 9 s		12 V	4 W	R. 136-33
Tail lamps	2	BA. 15s/19		12 V	5 W	R. 136-13
Interior lamp	1	BA. 15 s		12 V	7 W	R. 136-08
Dashboard lighting	1	BA. 9 s		12 V	2 W	R. 136-34
Oil pressure warning lamp	1	BA. 9 s		12 V	1,5 W	R. 136-04

TABLE OF FUSES

Supply	Calibre	Colour	Units protected
Lighting switch	10 A	Green	Left-hand sidelamp and tail lamp Dashboard lighting
Lighting switch	10 A	Red	Right-hand side lamp and tail lamp
« + » Battery	10 A	Yellow	Interior lamp Stop lamp switch ⟶ Stop lamps
Ignition switch	16 A	Blue	Switch ⟶ Windscreen wiper motor Engine oil pressure warning lamp (2 CV 6) Flasher unit ⟶ reversing switch ⟶ direction indicator lamp Indicator ⟶ Petrol gauge rheostat Thermal voltmeter Voltage regulator

WIRING DIAGRAM

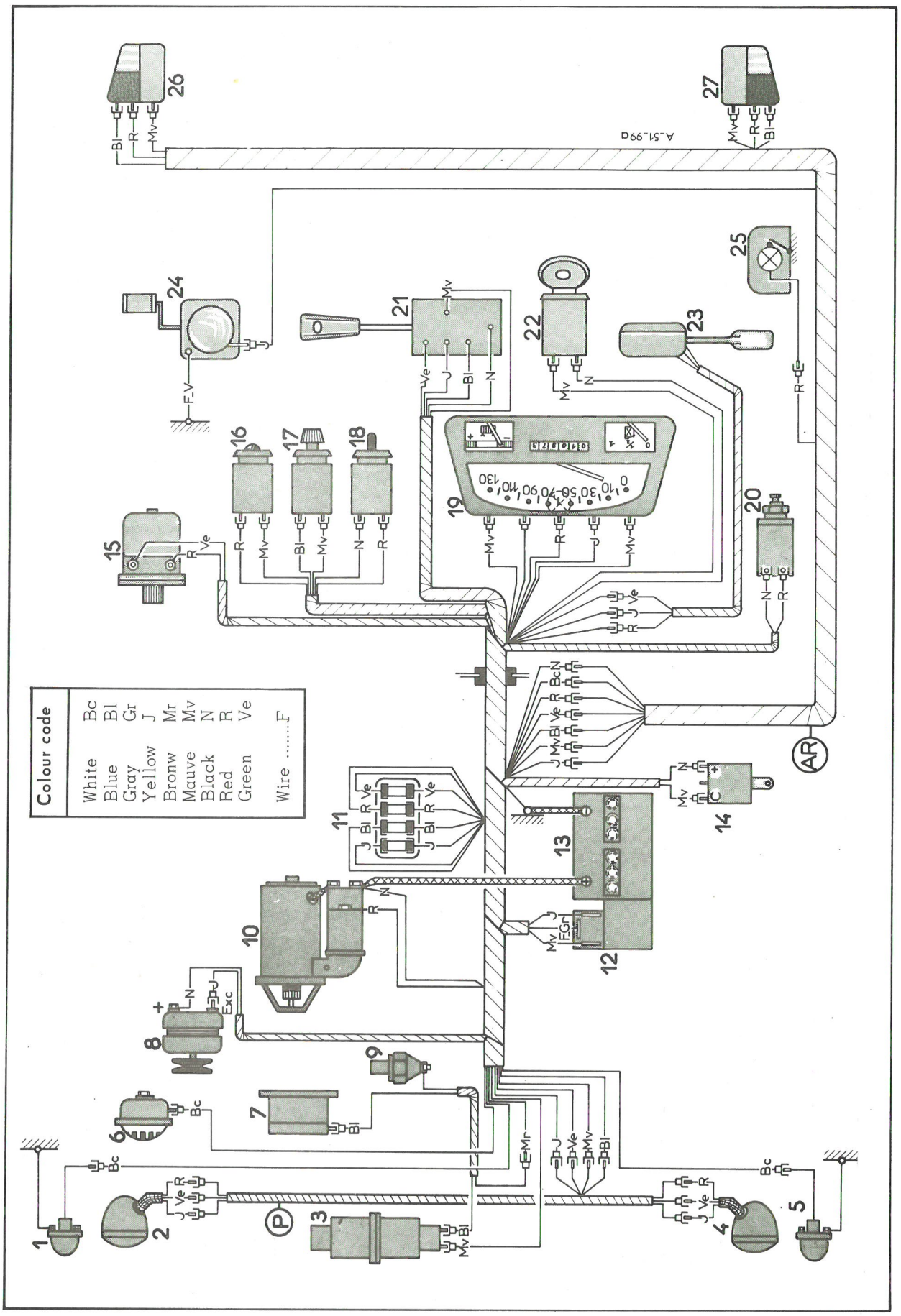

CIRCUIT DIAGRAM

P.T.O.

CIRCUIT DIAGRAM

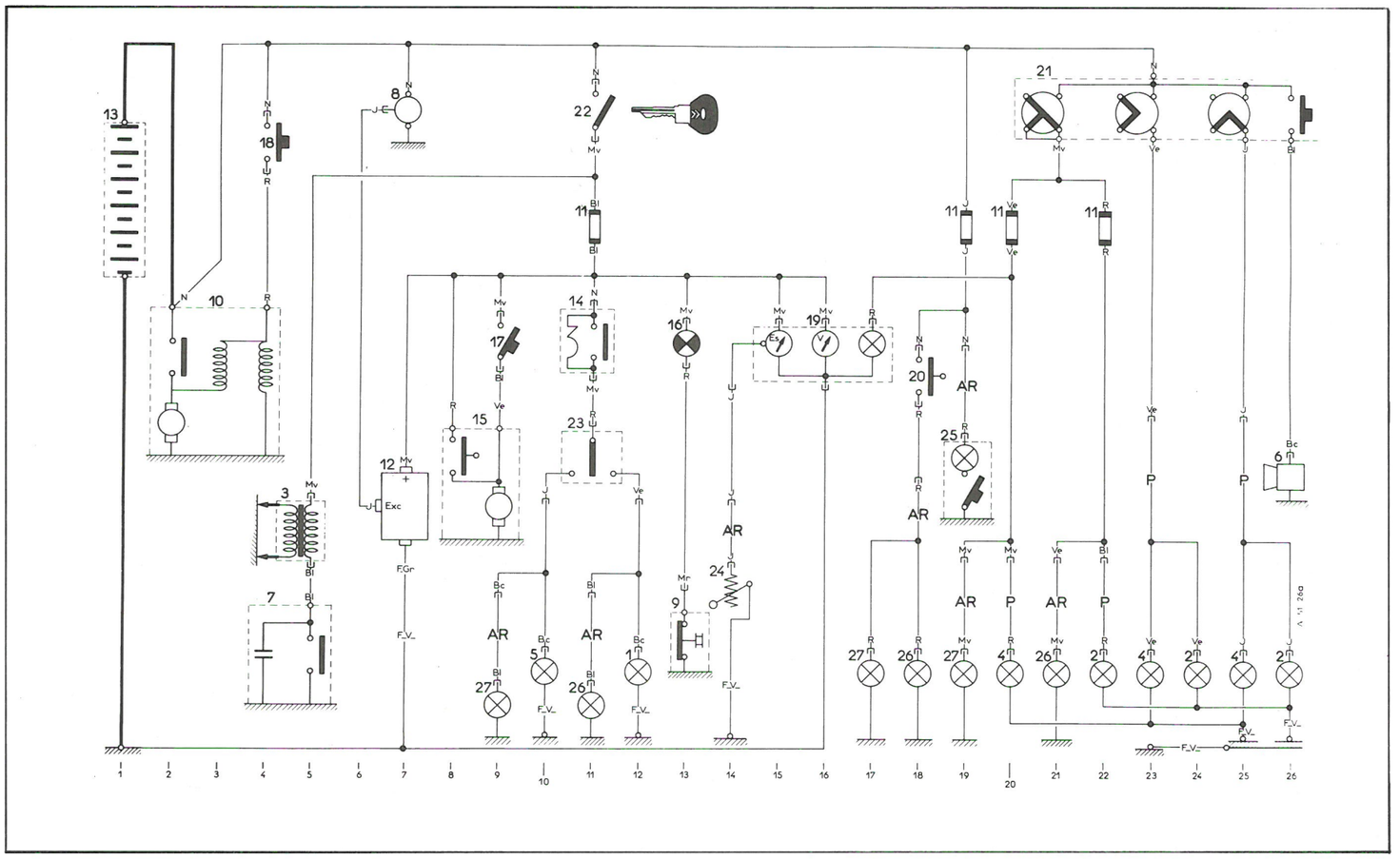

IDENTIFICATION OF PARTS

Ref.	Description and Position	Ref.	Description and Position
1	Direction indicator lamp, front, right-hand 12	13	Battery 1
2	Headlamp right-hand :	14	Flasher unit 11
	- Main beam headlamp 26	15	Windscreen wiper motor ..... 8 - 9
	- Dipped headlamp 24	16	Oil pressure warning lamp *(2 CV 6)* 13
	- Sidelamp 22	17	Windscreen wiper switch 9
3	Coil 5	18	Starter switch 4
4	Headlamp left-hand :	19	Speedometer dashboard lamp 17
	- Main beam headlamp 25		Voltmeter pressure gauge 16-17
	- Dipped headlamp 23	20	Stop light switch 18
	- Sidelamp 20	21	Lighting and horn switch ..... 20 à 26
5	Direction indicator lamp, front, left-hand : 10	22	Anti-theft ignition switch 11
6	Horn 26	23	Switch for direction indicator lamps 11
7	Distributor 5	24	Petrol gauge rheostat 14
8	Alternator 7	25	Interior lamp 19
9	Engine oil pressure switch *(2 hp 6)* 13	26	Rear lamp cluster right-hand : dir. indicator lamp 11
10	Starter 3		Stop lamp, rear lamp 18-21
11	Fuse box 11-19-20-22	27	Rear lamp cluster left-hand : dir. indicator lamp 9
12	Voltage regulator 7		Stop lamp, tail lamp 17-19

IDENTIFICATION OF HARNESS

Without mark : Front harness	**P** : Head lamps harness
AR : Rear harness	**F. V** : Jumper lead

TABLE OF BULBS

Description	Quantity	Base	Voltage	Power	French standard	International type
Main or dipped beams	2	P. 45 t 41	12 V	45/40 W	R. 136-15	
Front and rear direction indicators Stop lamps	4 2	BA. 15 s/19	12 V	21 W	R. 136-12	P. 25/1
Front sidelamps	2	BA. 9 s	12 V	4 W	R. 136-33	T. 8/4
Tail lamps	2	BA. 15 s/19	12 V	5 W	R. 136-13	
Interior lamp	1	BA. 15 s	12 V	7 W	R. 136-08	
Dashboard lighting	1	BA. 9 s	12 V	2 W	R. 136-34	T. 8/2
Oil pressure warning lamp Hazard warning lamp Nivocode warning lamp *9/1976* →	1 1 1	BA. 9 s	12 V	4 W	R. 136-33	T. 8/4

TABLE OF FUSES

Supply	Calibre	Colour	Units protected
Lighting switch	10 A	Green	L.H. side and tail lamps Dashboard lighting → *9/1976*
Lighting switch	10 A	Red	R.H. side and tail lamps → *9/1976*
			Side and tail lamps, L.H. and R.H. side Dashboard lighting *9/1976* →
" + " battery	10 A	Yellow	Interior lamp Stop lamps Front and rear hazard warning device Hazard warning lamp Nivocode warning lamp (hydraulic level in reservoir)
" + " Battery (when switching on the ignition)	16 A	Blue	Windscreen wiper motor Voltage regulator Oil pressure warning lamp *(2 CV 6)* Fuel gauge sender unit Thermal voltmeter Front and rear direction indicators Oil pressure warning lamp

WIRING DIAGRAM *9/1974* → *9/1976*

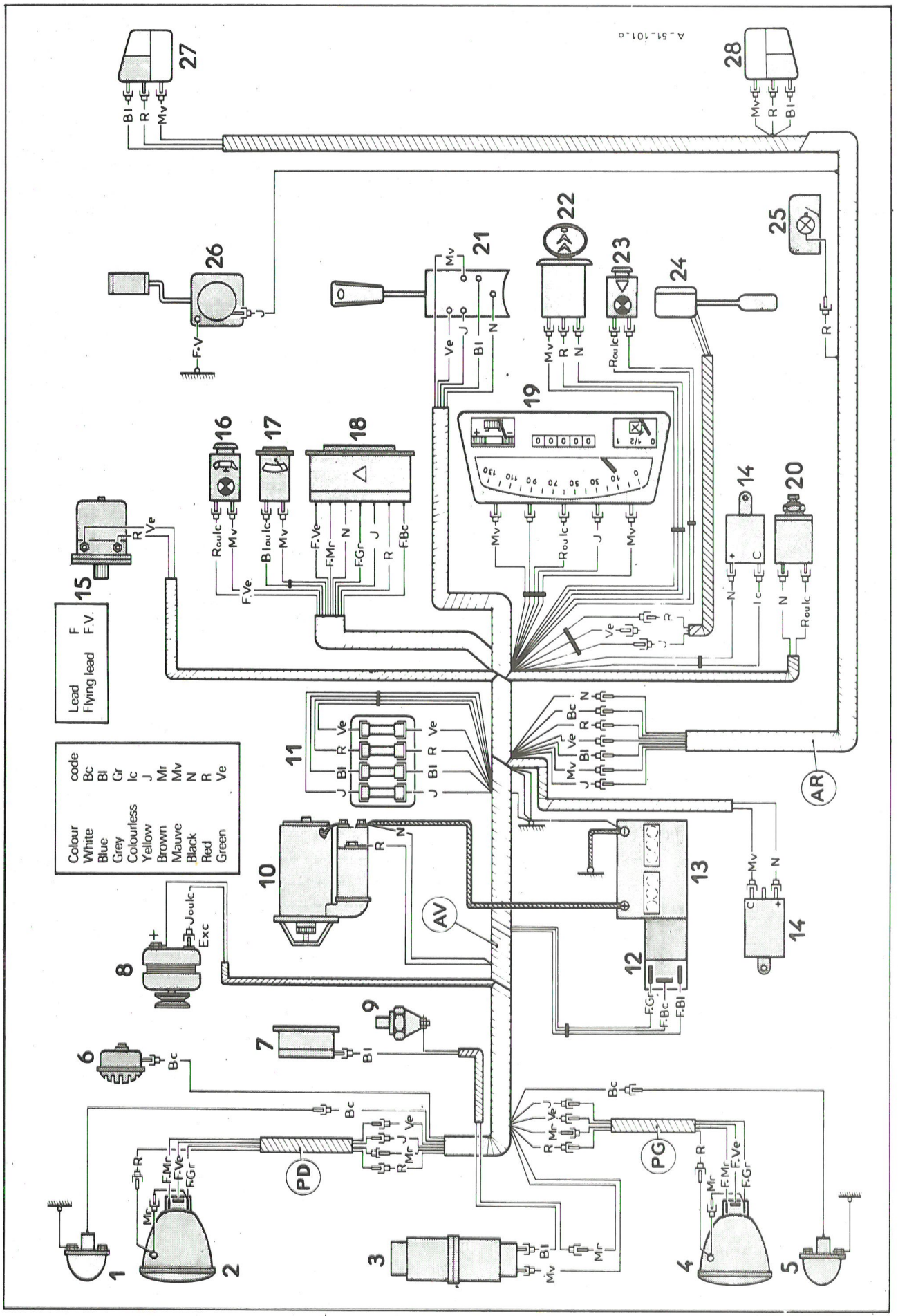

CIRCUIT DIAGRAM

P.T.O.

A-51-113

WIRING DIAGRAM 9/1976 →

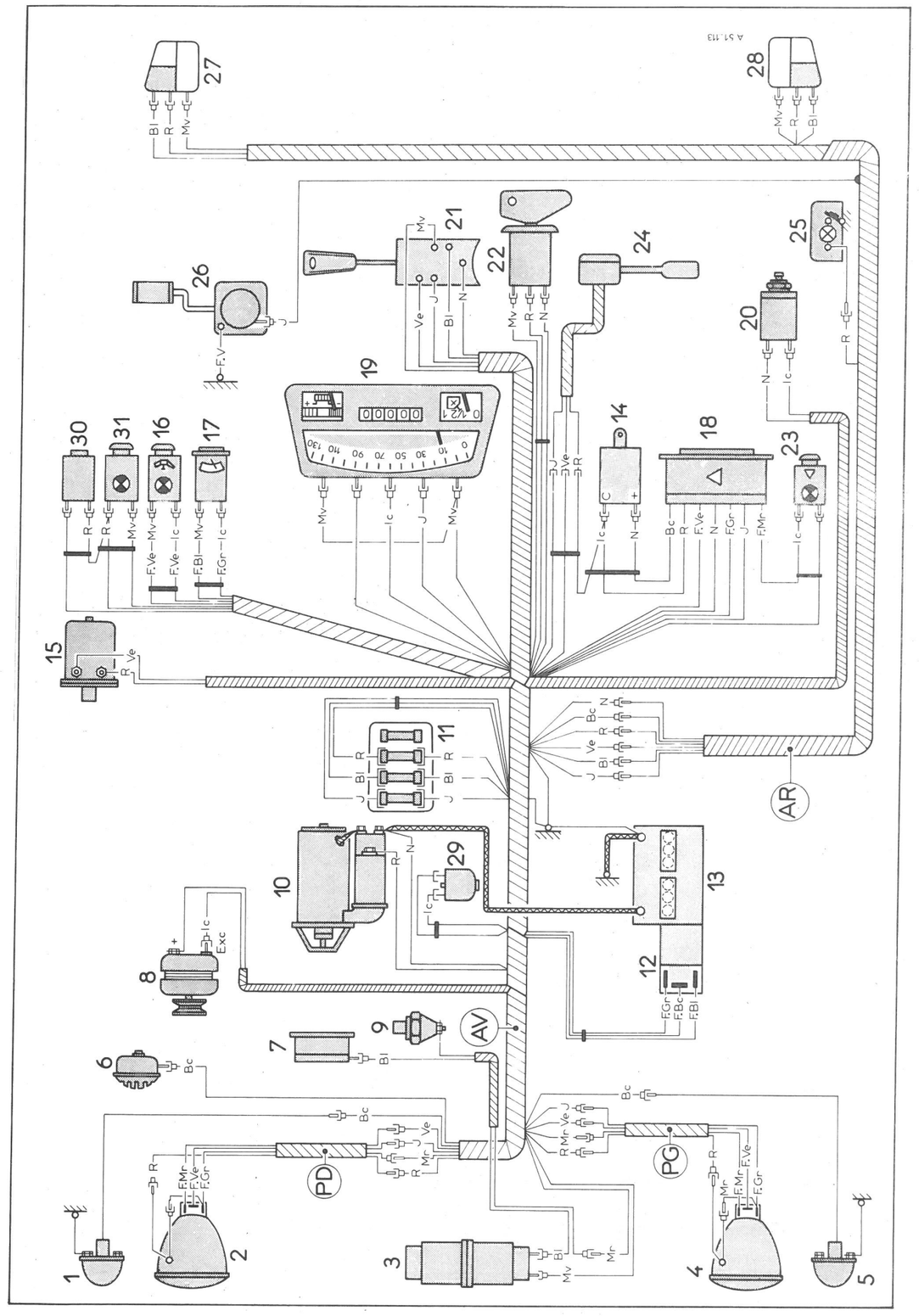

CIRCUIT DIAGRAM

♦ A 51-102 b

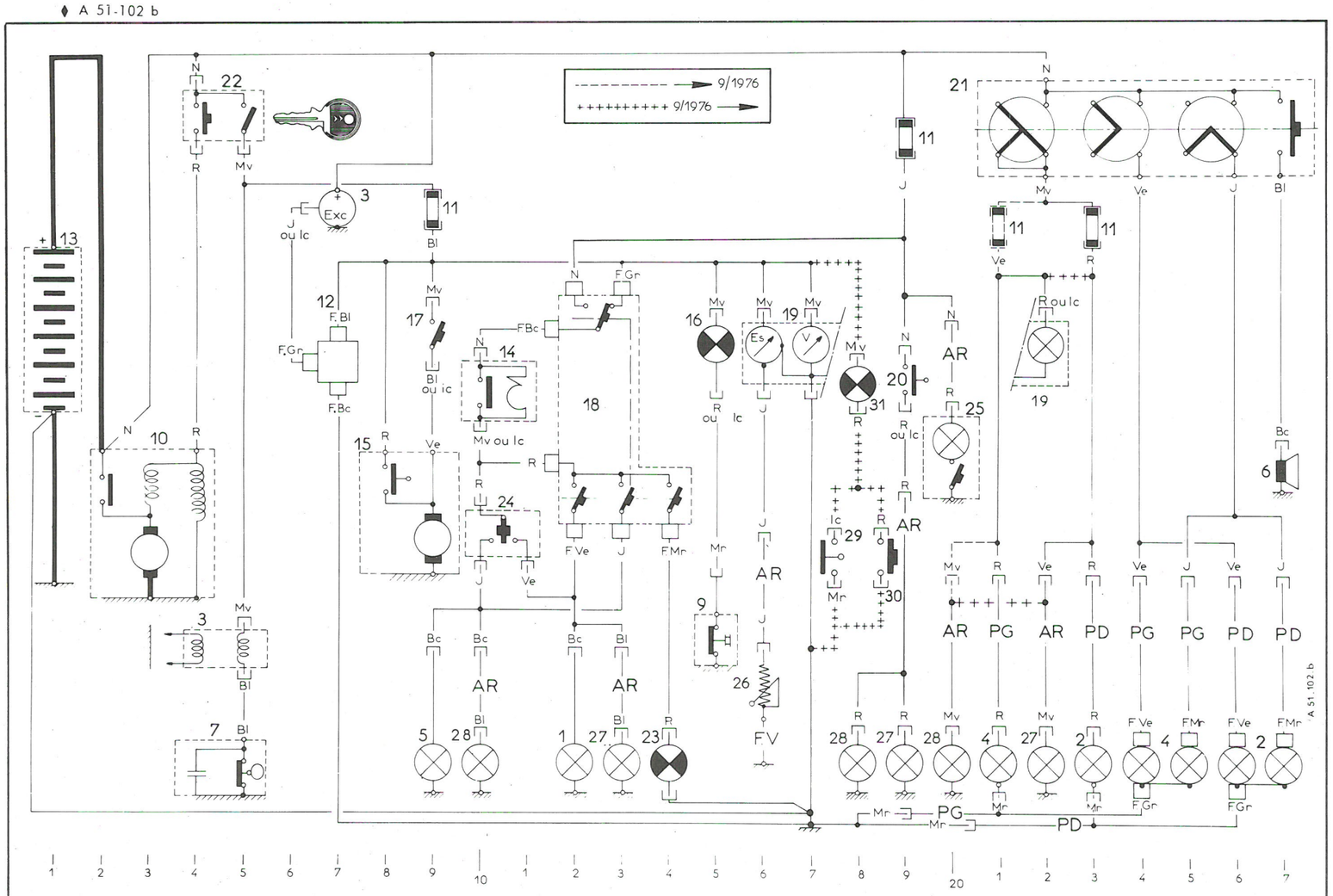

IDENTIFICATION OF PARTS

Ident. mark	Description and Position	Ident. mark	Description and Position
1	Front direction indicator, R.H. side 12	**18**	Switch for hazard warning device ..... 12 to 14
2	Headlamp, R.H. side	**19**	Dashboard :
	– Main beam 27		– Dashboard lighting 22
	– Dipped beam 26		– Voltmeter 17
	– Side lamp 23		– Petrol gauge sender unit 16
3	Ignition coil 4-5	**20**	Stop lamp switch 19
4	Headlamp, L.H. side :	**21**	Lighting switch ..... 21 to 27
	– Main beam 25	**22**	Anti-theft ignition switch ..... 4 to 5
	– Dipped beam 24	**23**	Hazard warning lamp 14
	– Sidelamp 21	**24**	Switch for direction indicator lamps 10-11
5	Front direction indicator, L.H. side 9	**25**	Interior lamp 20
6	Horn 27	**26**	Petrol gauge rheostat 16
7	Distributor 4-5	**27**	Rear lamp cluster, R.H. side :
8	Alternator 7		– Direction indicator 13
9	Engine oil pressure switch *(2 CV 6)* 15		– Stop lamp 19
10	Starter ..... 2 to 4		– Tail lamp 22
11	Fuse box 9-19-21-23	**28**	Rear lamp cluster, L.H. side :
12	Voltage regulator 7		– Direction indicator 10
13	Battery 1		– Stop lamp 18
14	Flasher unit		– Tail lamp 20
	(on scuttle panel, at engine end → 9/75) 10-11	**29**	Switch for blake fluid level on the reservoir 18
15	Windscreen wiper motor 8-9	**30**	Push-button for checking the Nivocode warning lamp 18
16	Oil pressure warning lamp 15	**31**	Nivocode warning lamp 18
17	Windscreen wiper switch 9		

IDENTIFICATION OF HARNESSES

Without identification mark	Front harness	**P.G.**	Headlamp harness, L.H. side
AR	Rear harness	**P.D.**	Headlamp harness, R.H. side
		F.V.	Flying lead

Supplement No. 2 to Manual 816-2 (ADD)

TABLE OF BULBS

Description	Quantity	Base	Voltage	Power	International type
Main or dipped beams	2	P.45 t.41	12 V	45/40 W	E. 2
Direction indicators Stoplamps	4 2	BA. 15 s/19	12 V	21 W	P. 25/1
Tail lamps	2	BA. 15 s/19	12 V	5 W	
Side lamps Oil pressure warning lamp Hazard warning indicator lamp Nivocode warning lamp Choke indicator lamp	2 1 1 1 1	BA. 9 s	12 V	4 W	T. 8/4
Dashboard lighting Direction indicator warning lamp Main beam indicator lamp	1 1 1	BA. 9 s	12 V	2 W	T. 8/2
Interior lamp	1	BA. 15 s	12 V	7 W	

TABLE OF FUSES

Supply	Calibre	Colour	Units protected
Lighting switch	10 A	Red	Front and tail lamps Dashboard lighting
« + » battery	10 A	Yellow	Interior lamp Stoplamps Hazard warning lamps and indicator lamp
« + » battery (when switching on the ignition)	16 A	Blue	Windscreen wiper motor Voltage regulator and alternator excitation Fuel gauge sender unit and rheostat Thermal voltmeter Direction indicators (warning lamp) Engine oil pressure warning lamp Nivocode warning lamp Choke indicator lamp

OPERATION No. AZ. 510-00 g : *Arrangement of the electrical installation*
AZ All Types (7/1981 ⟶)

WIRING DIAGRAM

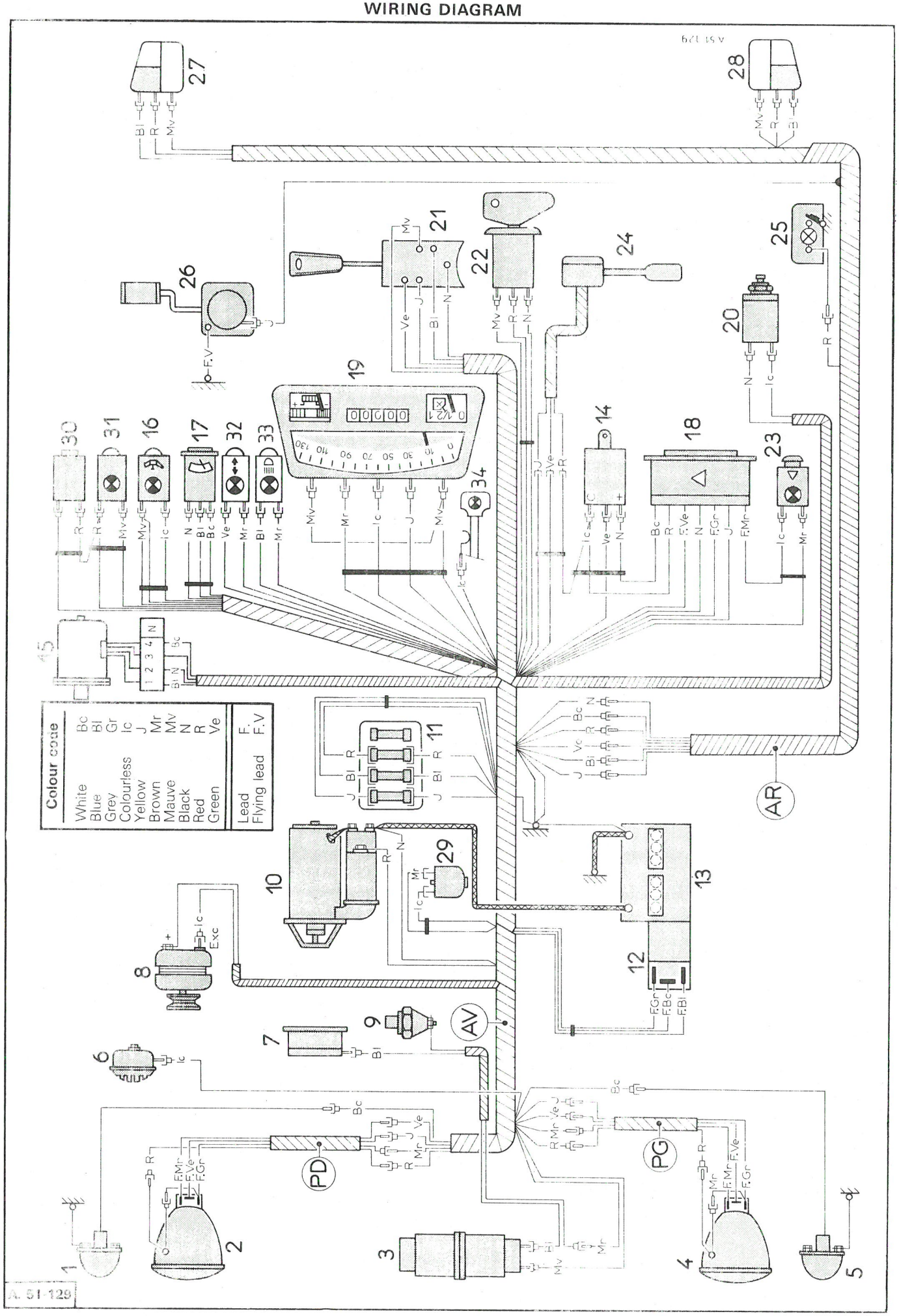

CIRCUIT DIAGRAM

P.T.O.

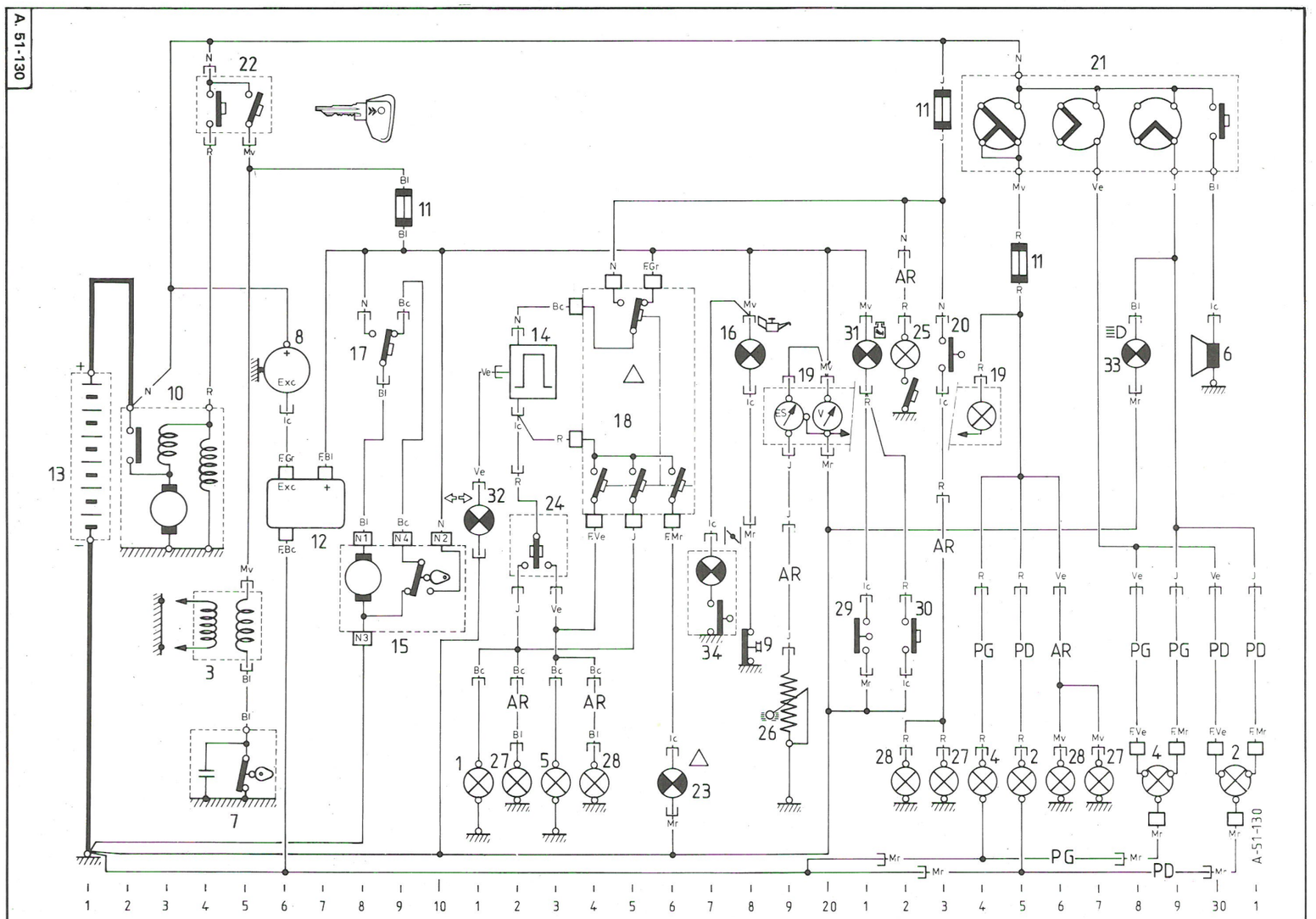

IDENTIFICATION OF PARTS

Ident. mark	Description ..... Position	Ident. mark	Description ..... Position
1	Front direction indicator, R.H. side 11	19	Dashboard :
2	Headlamp, R.H. side :		- Lighting 24
	- Main beam 31		- Voltmeter *(Club)* 20
	- Dipped beam 30		- Fuel gauge sender unit 19
	- Side lamp 25	20	Stoplamp switch 23
3	Ignition coil ..... 4 - 5	21	Lighting switch ..... 25 to 29
4	Headlamp, L.H. side :	22	Anti-theft ignition switch ..... 4 to 5
	- Mainbeam 29	23	Hazard warning indicator lamp 16
	- Dipped beam 28	24	Switch for direction indicator lamps ..... 12 - 13
	- Side lamp 24	25	Interior lamp 22
5	Front direction indicator, L.H. side 13	26	Fuel gauge rheostat 19
6	Horn 30	27	Rear lamp cluster, R.H. side :
7	Distributor ..... 4 - 5		- Direction indicator 12
8	Alternator 6		- Stoplamp 23
9	Engine oil pressure switch 18		- Tail lamp 27
10	Starter ..... 2 to 4	28	Rear lamp cluster, L.H. side :
11	Fuse box ..... 9 - 23 - 25		- Direction indicator 14
12	Voltage regulator 7		- Stoplamp 22
13	Battery 1		- Side lamp 26
14	Flasher unit ..... 12 - 13	29	Level switch on brake fluid reservoir 21
15	Windscreen wiper motor ..... 8 - 9	30	Push-button for checking Nivocode warning lamp 22
16	Oil pressure warning lamp 18	31	Nivocode warning lamp 21
17	Windscreen wiper switch 9	32	Direction indicator warning lamp (depending on country) ... 11
18	Switch for hazard warning device ..... 14 to 16	33	Main beam indicator lamp (depending on country) 28
		34	Choke indicator lamp 17

IDENTIFICATION OF HARNESSES

Without ident. mark	: Front harness	**PG**	: Headlamp harness, L.H. side
AR	: Rear harness	**PD**	: Headlamp harness, R.H. side
		FV	: Flying lead

TABLE OF BULBS

Description	Quantity	Base	Type	Voltage	Power	French standard ref.
Main beam, headlamps Dipped beam, headlamps	2	BA. 21 d	Yellow selective	6 V	36/36 W	R.136-02
Direction indicators lamps Parking lamps	2	BA. 15d	Balloon dia = 25 mm	6 V	18/4 W	R.136-09
Sidelamps Number plate lamp	3	Festoon	dia.=10/39	6 V	4 W	R.136-05
Tail lamp, right-hand	1	BA.15 s	Small balloon	6 V	4 W	R.136-08
Tail lamp, left-hand Stop light	1	BA 15 d	Balloon dia.=25 mm	6 V	18/4 W	R.136-09
Dashboard lighting Ignition warning lamp	2	BA.9 s	Clear balloon	6 V	1.5 W	R.136-04

WIRING DIAGRAM

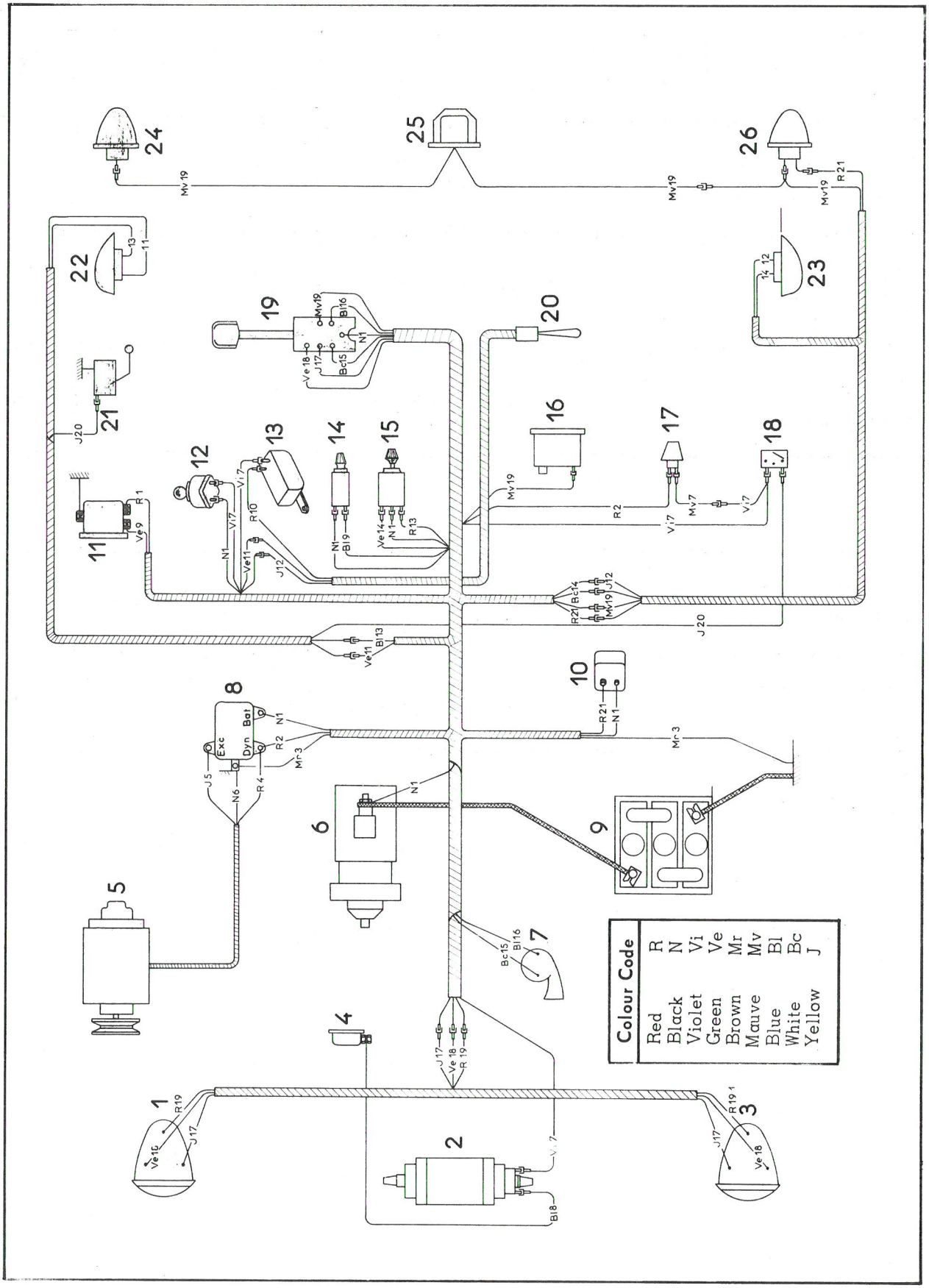

CIRCUIT DIAGRAM

P.T.O.

CIRCUIT DIAGRAM

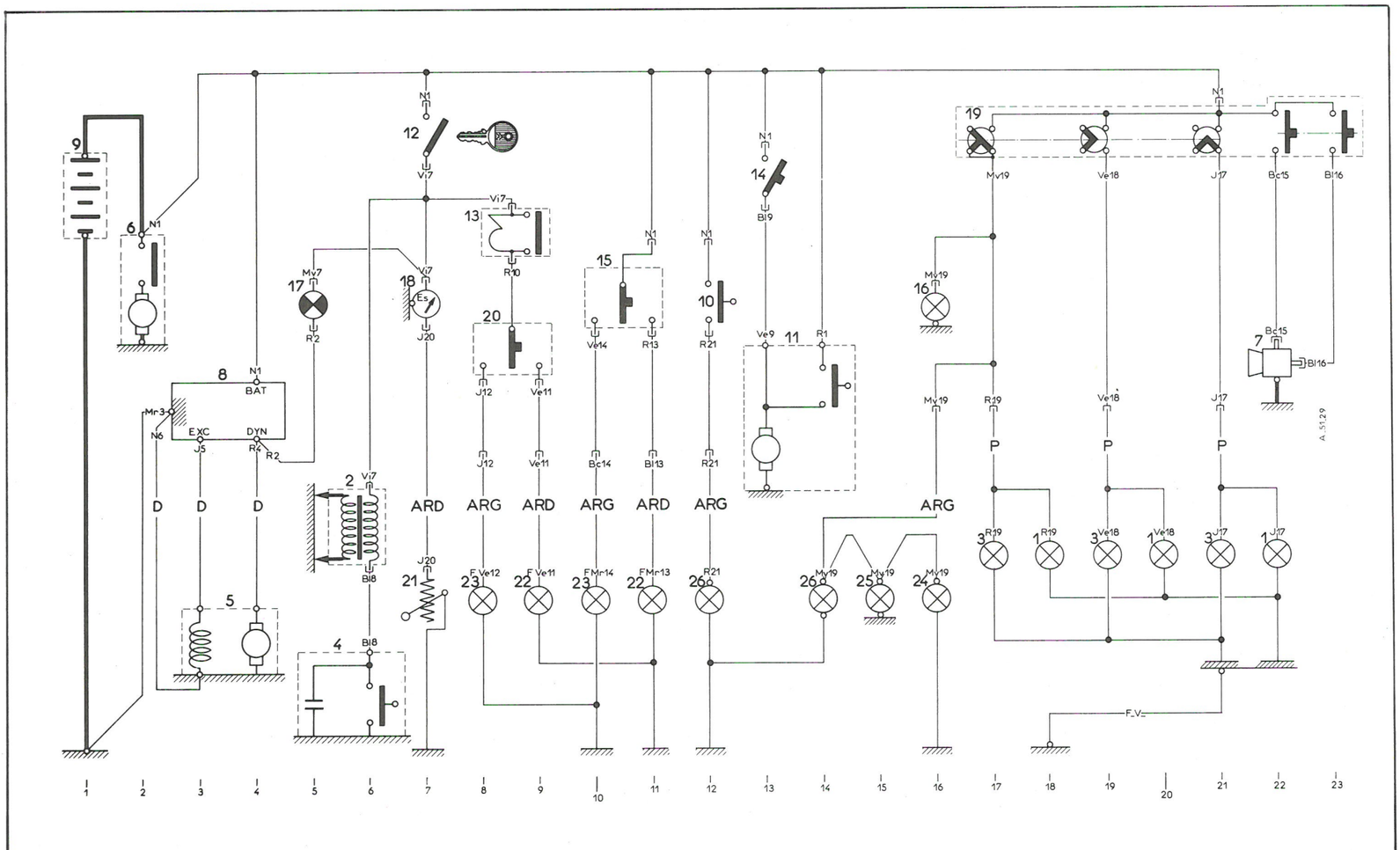

IDENTIFICATION OF PARTS

Ref.	Description	Position	Ref.	Description	Position
1	Headlamp, right-hand		14	Windscreen wiper switch	13
	- Headlamp main beam	22	15	Reversing switch for parking lamps	10-11
	- Headlamp dipped beam	20	16	Speedometer lamp	16
	- Sidelamp	18	17	Ignition warning lamp	5
2	Coil	6	18	Petrol gauge	7
3	Headlamp, left-hand		19	Lighting and horn switch	17 to 23
	- Headlamp main beam	21	20	Reversing switch for direction indicator lamps	8- 9
	- Headlamp dipped beam	19	21	Petrol gauge rheostat	7
	- Sidelamp	17	22	Sidelamp cluster right-hand	
4	Distributor	6		- Parking lamp	11
5	Dynamo	3 - 4		- Direction indicator lamp	9
6	Starter	2	23	Sidelamp cluster left-hand	
7	Horn (town and country)	22 - 23		Parking lamp	10
8	Regulator	3 - 4		- Direction indicator lamp	8
9	Battery	1	24	Rear lamp right-hand	16
10	Stop lamp switch	12	25	Lamp number plate	15
11	Windscreen wiper motor	13 - 14	26	Tail lamp, left-hand	14
12	Ignition switch	7		and stoplamp	12
13	Flasher unit	8- 9			

IDENTIFICATION OF PARTS

None	Front main harness	**AR.G**	Rear harness, left-hand
D	Dynamo-regulator harness	**AR.D**	Rear harness, right-hand
P	Headlamp harness	**F.V**	Jumper lead

TABLE OF BULBS

Description	Quantity	Base	Type	Voltage	Power	French Standard ref.
Headlamps, Dipped/ Main beam	2	BA. 21 d	Selective Yellow	12 V	36/36 W	R.136-02
Direction indicator lamps	2	BA.15 s	Large balloon	12 V	15 W	R.136-09
Sidelamps Number plate lamp	3	Festoon	dia./10/39	12 V	4 W	R.136-05
Tail lamp right-hand	1	BA.15 s	Small balloon	12 V	4 W	R.136-08
Tail lamp left-hand Stop lamp	1	BA.15d/19	Large balloon	12 V	18/4 W	R.136-12
Dashboard lighting	1	BA.9 s		12 V	1.5 W	R.136-04

TABLE OF FUSES

Supply	Capacity	Colour	Units protected
Horns and lighting switch (side lamps terminal	10 A	Yellow	Side lamps and tail lamps Number plate lamp Dashboard
« + » Battery	16 A	Green	Stop lamps Ignition switch → Direction indicator lamp switch → Windscreen wiper → Coil → Petrol gauge → Voltage regulator Parking lamps switch → Parking lamps (right or left

OPERATION N° AK. 510-00 a : *Arrangement of the electrical installation.*
(3 CV Van (AK) 12 volts 3/ 1966 ⟶ 5/ 1968)

WIRING DIAGRAM

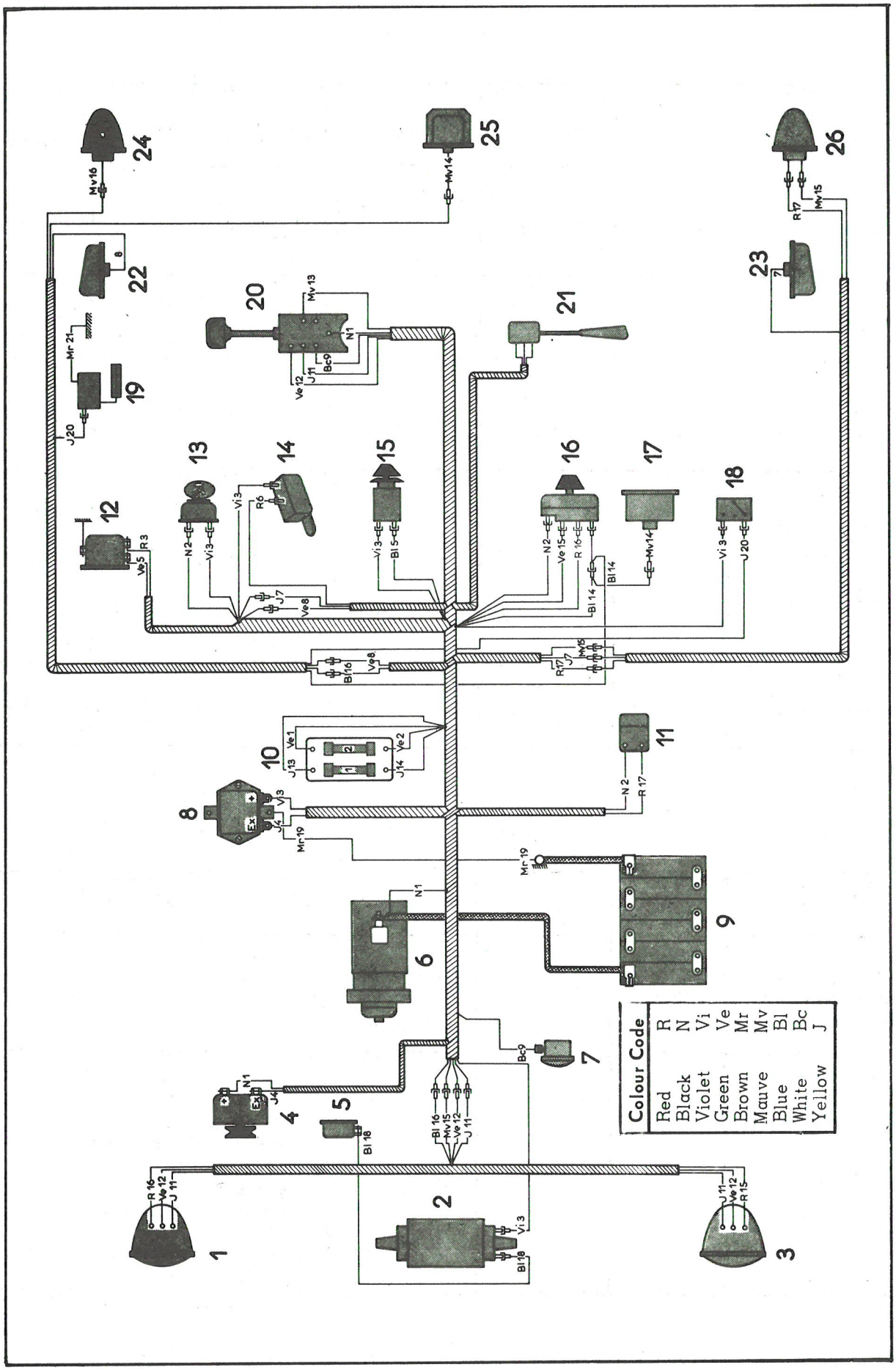

CIRCUIT DIAGRAM

P.T.O.

CIRCUIT DIAGRAM

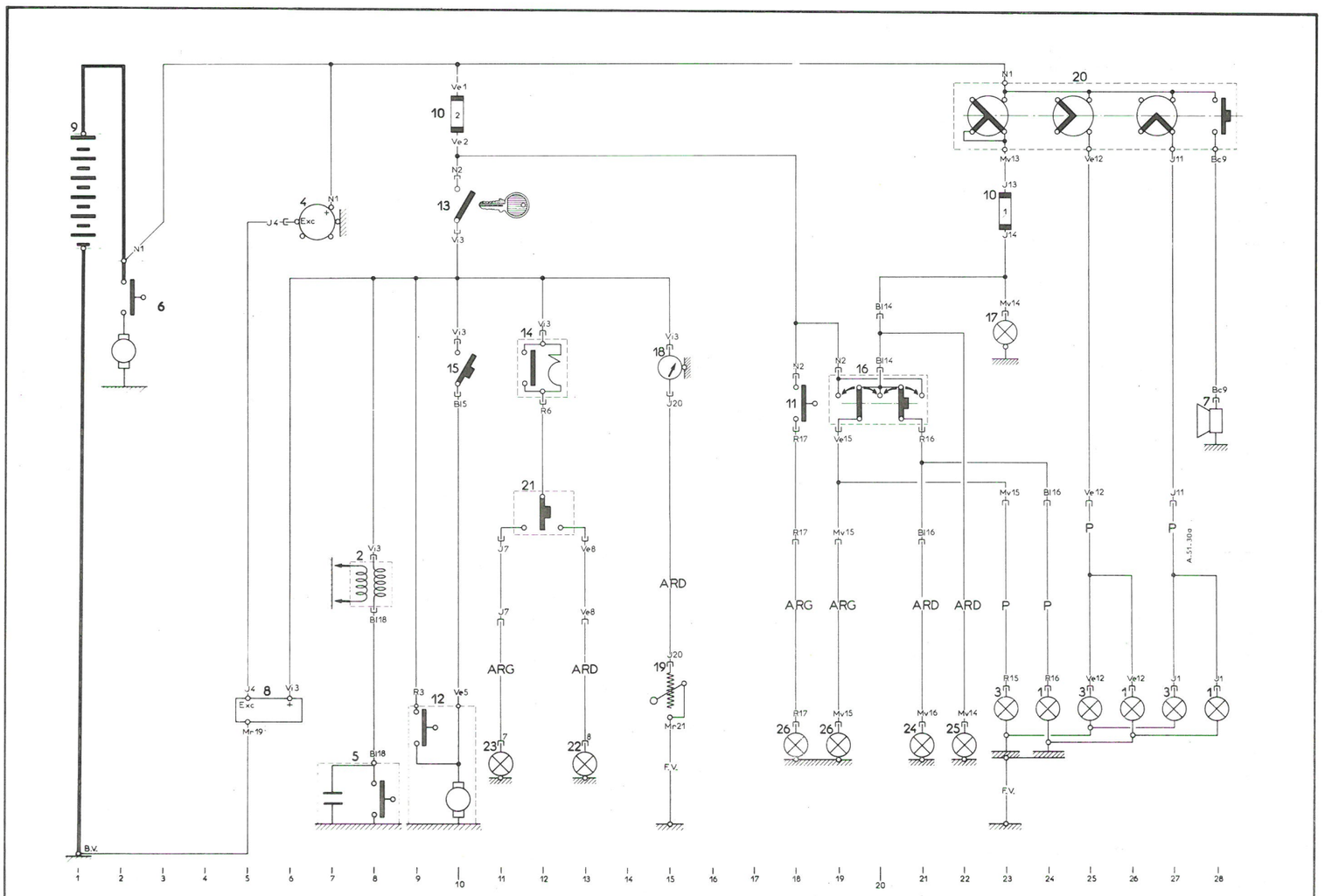

IDENTIFICATION OF PARTS

Ref.	Description	Position	Ref.	Description	Position
1	Headlamp right-hand		11	Stop lamp switch	18
	- Main beam headlamp	28	12	Windscreen wiper motor	9-10
	- Dipped beam headlamp	26	13	Ignition switch	10
	- Sidelamp	24	14	Flasher unit	12
2	Coil	8	15	Windscreen wiper switch	10
3	Headlamp, left-hand		16	Parking lamp switch	20
	- Main beam headlamp	27	17	Speedometer lamp	23
	- Dipped beam headlamp	25	18	Petrol gauge	15
	- Sidelamp	23	19	Petrol gauge rheostat	15
4	Alternator	6	20	Horn and lighting switch	23 to 28
5	Distributor	7 - 8	21	Direction indicator lamp switch	12
6	Starter	2	22	Direction indicator lamp, right-hand	13
7	Horn	28	23	Direction indicator lamp, left-hand	11
8	Voltage regulator	5 - 6	24	Rear lamp, right-hand	21
9	Battery	1	25	Number plate lamp	22
10	Fuse box	10 - 23	26	Stop lamp and left-hand tail-lamp	19-18

IDENTIFICATION OF HARNESSES

Without mark	Front harness	AR. D	Rear harness, right-hand
F.V	Jumper lead	AR. G	Rear harness, left-hand

TABLE OF BULBS

Description	Quantity	Base	Type	Voltage	Power	French Standard Ref.
Headlamps, Dipped/ Main beam	2	BA. 21 d	Selective yellow	12 V	36/36 W	R. 136-02
Direction indicator lamps	2	BA. 15 s	Large Balloon	12 V	15 W	R. 136-09
Sidelamps Number plate lamp	3	Festoon	$\phi = 10/39$	12 V	4 W	R. 136-05
Tail-lamp right-hand	1	BA. 15 s	Small Balloon	12 V	4 W	R. 136-08
Tail-lamp left-hand Stop lamp	1	BA. 15 d/19		12 V	18/4 W	R. 136-12
Dashboard lighting Ignition warning lamp	2	BA. 9 s		12 V	1,5 W	R. 136-04

TABLE OF FUSES

Current supply	Capacity	Colour	Equipment protected
Lighting switch	10 A	Red	Speedometer lamp Parking lamp switch → Front and rear sidelamps Number plate lamp
Ignition switch	16 A	Blue	Regulator Flasher unit → Switch → Direction indicator lamps Switch → Windscreen wiper motor Gauge indicator → Rheostat
« + » Battery	10 A	Yellow	Parking lamp switch → Front and rear sidelamps Ignition switch → « Stop » lamps Interior lamp
Spare	16 A		

WIRING DIAGRAM

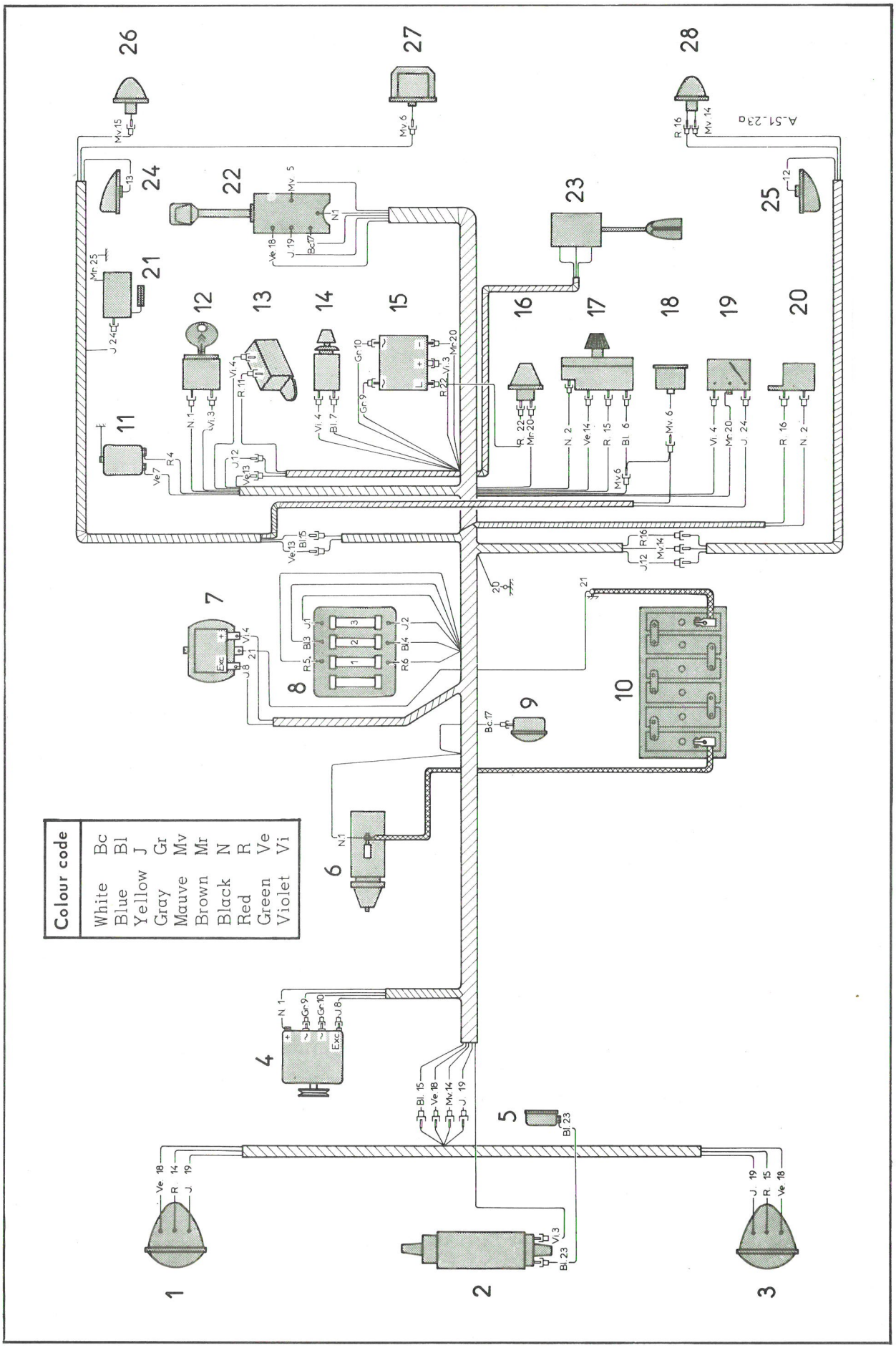

CIRCUIT DIAGRAM

P.T.O.

CIRCUIT DIAGRAM

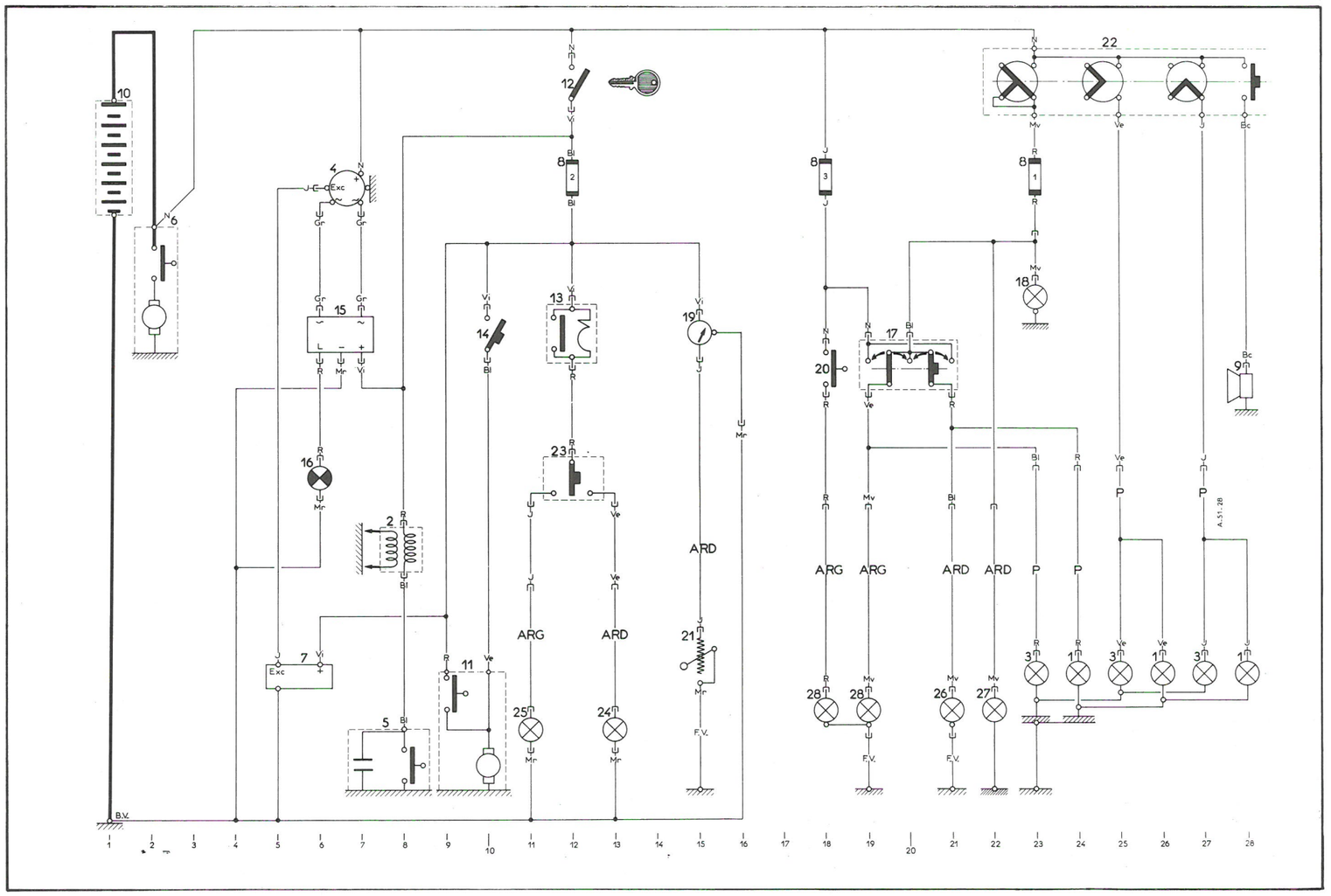

IDENTIFICATION OF PARTS

Ref.	Description and Position	Ref.	Description and Position
1	Headlamp right-hand :	12	Ignition switch 12
	- Main beam 28	13	Flasher unit 12
	- Dipped beam 26	14	Windscreen wiper switch 10
	- Sidelamp 24	15	Ignition warning relay 6-7
2	Ignition oil 8	16	Ignition warning lamp 6
3	Headlamp left-hand :	17	Parking lamp switch 20
	- Main beam 27	18	Speedometer lamp 23
	- Dipped beam 25	19	Petrol gauge 15
	- Sidelamp 23	20	Stop lamp switch 18
4	Alternator 6	21	Petrol gauge rheostat 15
5	Distributor 8	22	Lighting and horn switch ..... 23 à 28
6	Starter 2	23	Direction indicator switch 12
7	Voltage regulator 5-6	24	Direction indicator lamp right-hand 13
8	Fuse box 23-18-12	25	Direction indicator lamp left-hand 11
9	Horn 28	26	Rear lamp right-hand 21
10	Battery 1	27	Number plate lamp 22
11	Windscreen wiper motor ..... 9 - 10	28	Tail lamp left-hand and Stop lamp 19-18

IDENTIFICATION OF HARNESSES

Without mark	Front harness	ARD	Tail harness right-hand
F. V.	Jumper lead	ARG	Tail harness left-hand

TABLE OF BULBS

Description	Quantity	Base	Type	Voltage	Power	French standard ref.
Headlamps, Dipped/ Main beam	2	P 45t 41	Yellow selective	12 V	45/ 40 W	R.136-15
Direction indicator lamps	4	BA 15s/19	Pear shaped	12 V	21 W	R.136-12
Tail lamp Stop lamps	2	BAY 15d/19		12 V	21/5 W	R.136-12
Sidelamps	2	BA 9 s		12 V	4 W	R.136-33
Number plate lamp	1	Festoon	dia.=10 length= 38	12 V	4 W	R.136-05
Interior lamp	1	BA 15 s		12 V	7 W	R.136-08
Dashboard lighting Oil pressure warning lamp	2	BA 9 s		12 V	2 W	R.136-34

TABLE OF FUSES

Supply	Calibre	Colour	Units protected
Lighting switch	10 A	Red	Speedometer lamp Parking lamp switch → Sidelamps and tail lamps Number plate lamp
Ignition switch	16 A	Blue	Regulator Flasher unit → Switch → Direction indicator lamps Switch → Windscreen wiper motor Oil pressure warning lamp Dashboard (voltmeter and petrol gauge indicator)
« + » Battery terminal	10 A	Yellow	Parking lamp switch → Sidelamps and tail lamps Switch → Stop lamps Interior lamp
Spare	16 A		

WIRING DIAGRAM

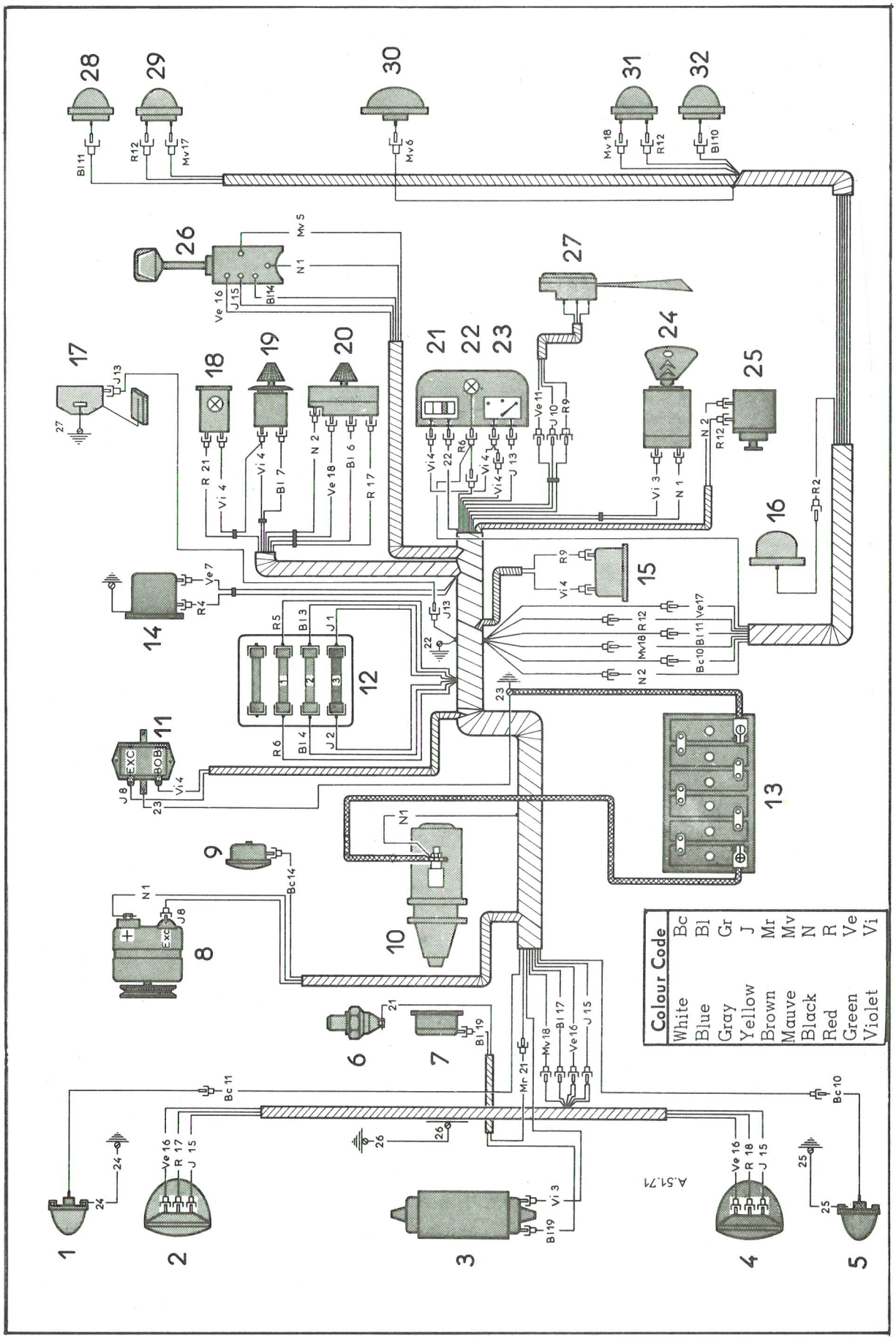

CIRCUIT DIAGRAM

P T.O.

CIRCUIT DIAGRAM

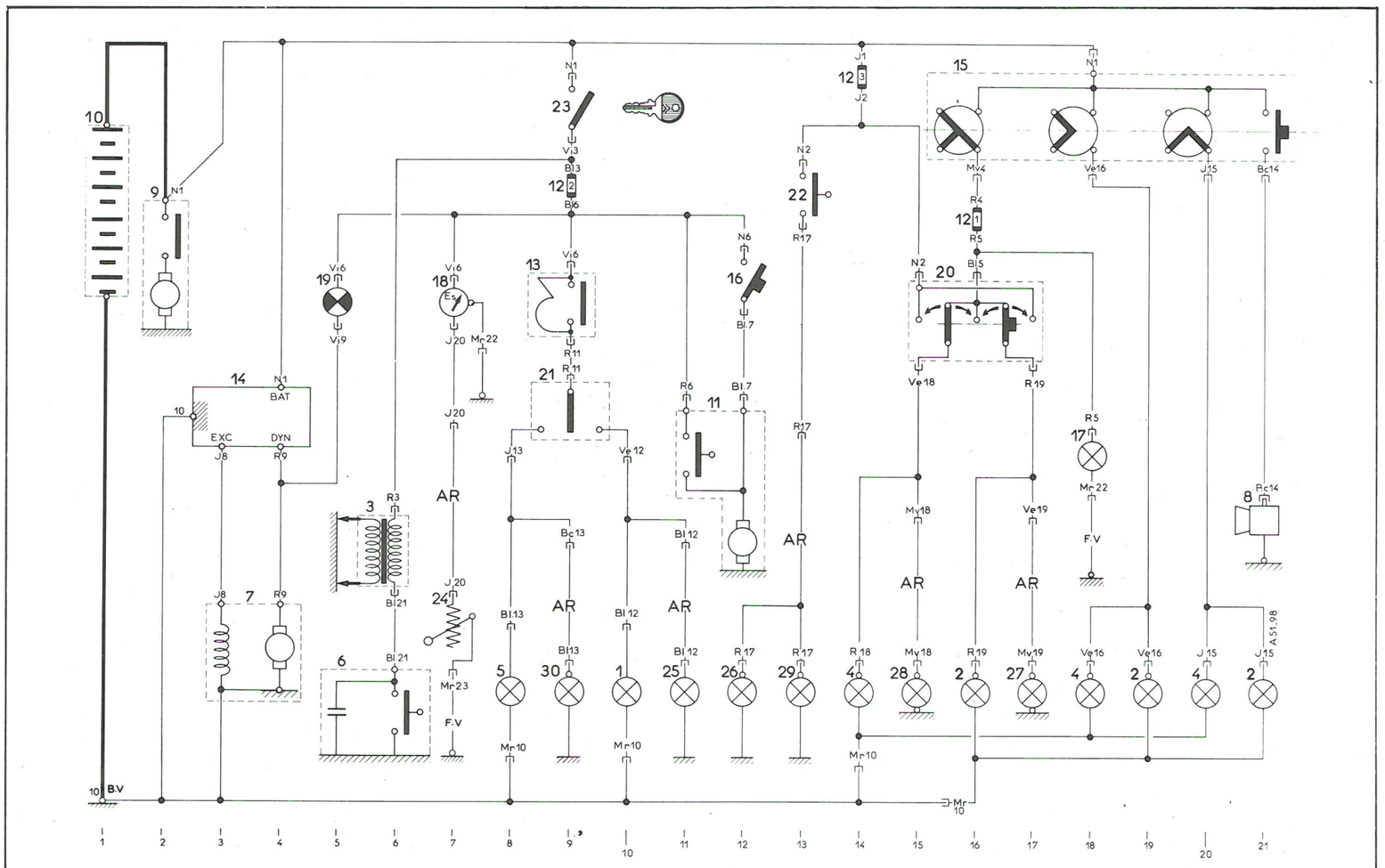

IDENTIFICATION OF PARTS

Ref.	Description	Position	Ref:	Description	Position
1	Direction indicator light front, right-hand	10	14	Windscreen wiper motor	12
2	Headlamp, front, right-hand :		15	Flasher unit	9
	- Main beam	26	16	Interior lamp	19
	- Dipped beam	24	17	Petrol gauge rheostat	14
	- Sidelamp	22	18	Oil pressure warning lamp	13
3	Ignition coil	5	19	Windscreen wiper switch	12
4	Headlamp front, left-hand :		20	Parking lamp switch	21
	- Main beam	25	21	Thermal voltmeter	15
	- Dipped beam	20	22	Dashboard lighting	16
	- Sidelamp	23	23	Petrol gauge	14
5	Direction indicator light, front left-hand	8	24	Ignition switch	11
6	Oil pressure switch	13	25	Brake lamp	18
7	Distributor	5	26	Lighting and horn switch	21 to 26
8	Alternator	8	27	Switch for direction indicator lamp	9
9	Horn	26	28	Direction indicator lamp rear right-hand	11
10	Starter	2	29	Tail lamp and stop lamp right-hand	21- 18
11	Voltage regulator	7	30	Number plate lighting	16
12	Fuse box	11 - 19 - 21	31	Tail lamp and stop lamp, left-hand	17- 19
13	Battery	1	32	Direction indicator lamp, left-hand	9

IDENTIFICATION OF HARNESSES

Without mark (Main) front harness

P Headlamp harness

AR Rear harness

F.V Jumper lead

TABLE OF BULBS

Description	Quantity	Base	Type	Voltage	Power	French Standard Ref.
Headlamps, Dipped/ Main beam	2	BA. 21 d	Selective yellow	6 V	36/36 W	R. 136-02
Direction indicator light Brake lamps	2	BA. 15 s	Large Balloon	6 V	15 W	R. 136-09
Interior lamp *(PA)*	1	BA. 15 s		6 V	7 W	R. 136-04
Sidelamps	2	Festoon		6 V	4 W	R. 136-05
Tail-lamps Dashboard lighting	2	BA. 9 s		6 V	4 W	R. 136-33
Ignition warning lamp	1	BA. 9 s		12 V	1,2 W	R. 136-04

WIRING DIAGRAM

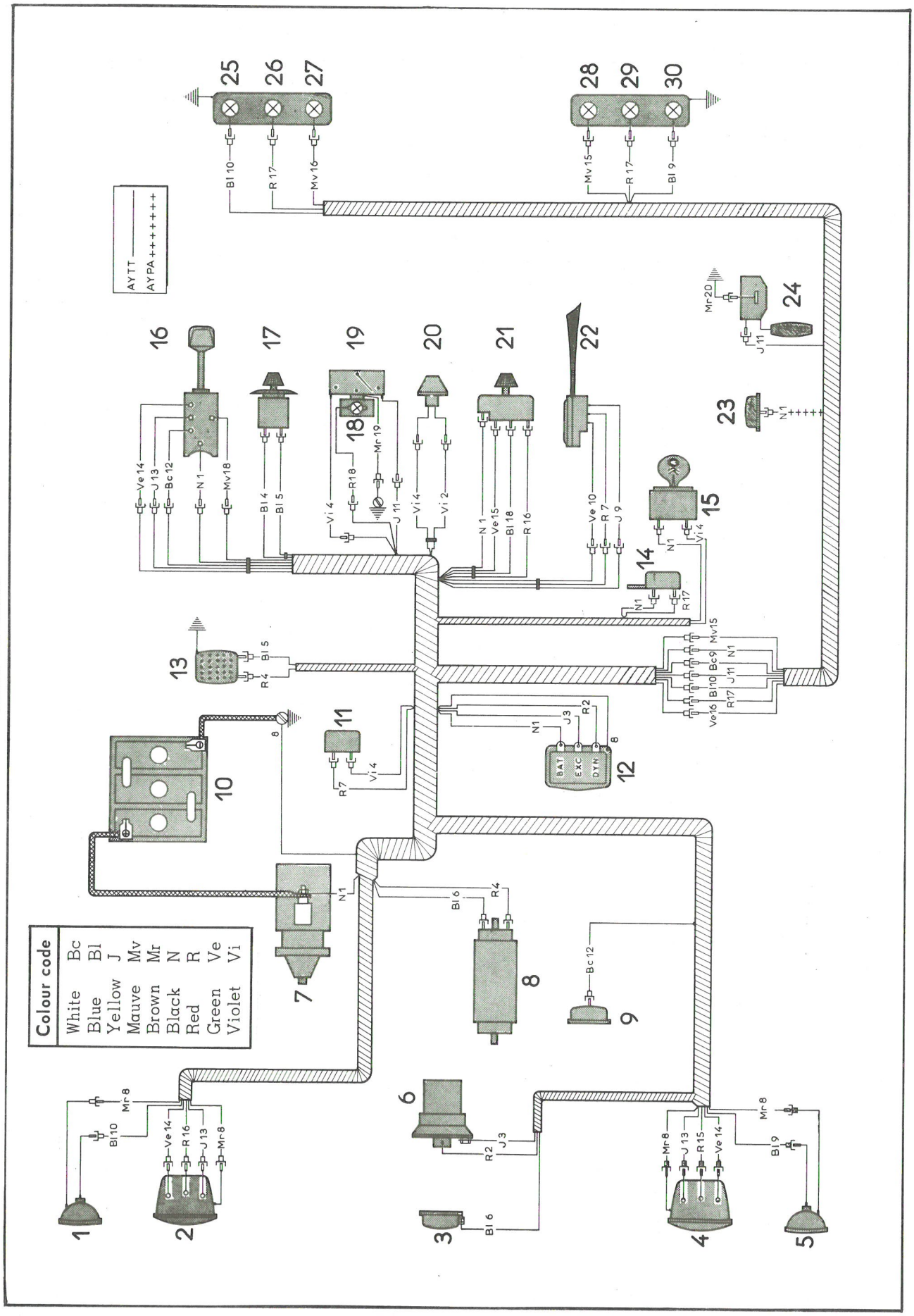

CIRCUIT DIAGRAM

P.T.O.

CIRCUIT DIAGRAM

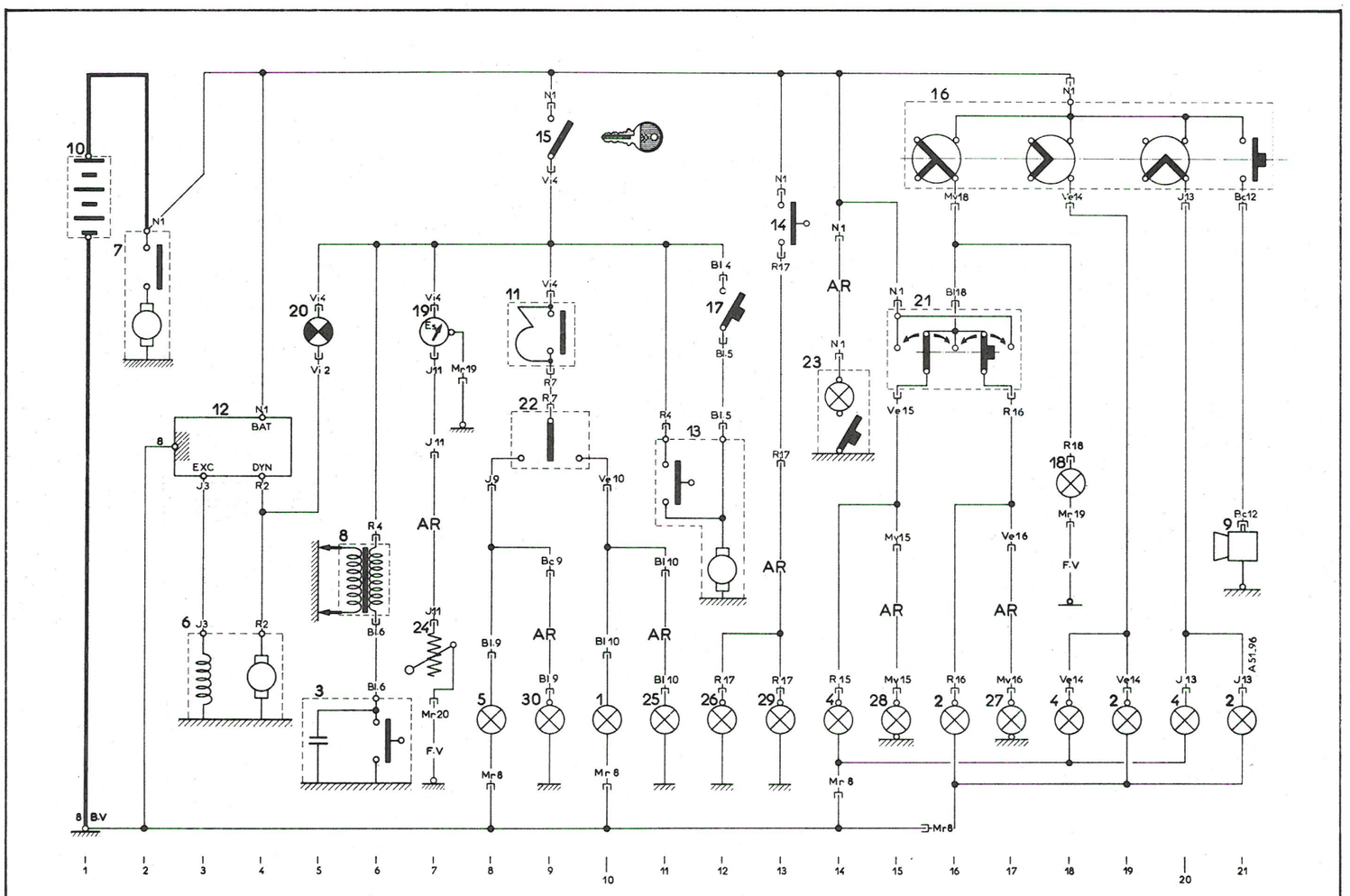

IDENTIFICATION OF PARTS

Ref.	Description and Position	Ref.	Description and Position
1	Direction indicator lamp, front, right-hand 10	13	Windscreen wiper motor 12
2	Headlamp, front right-hand :	14	Stop lamp switch 13
	- Main beam 21	15	Ignition switch 9
	- Dipped beam 19	16	Horn and lighting switch ..... 16 à 21
	- Sidelamp 16	17	Windscreen wiper switch 12
3	Distributor 5	18	Dashboard lighting 18
4	Headlamp left-hand :	19	Petrol gauge indicator 7
	- Main beam 20	20	Ignition warning lamp 5
	- Dipped beam 18	21	Parking lamp switch ..... 15 à 17
	- Sidelamp 14	22	Indicator lamp switch 9
5	Direction indicator lamp, front, left-hand 8	23	Interior lamp (*PA*) 14
6	Dynamo 3	24	Petrol gauge rheostat 7
7	Starter 2	25	Direction indicator lamp,rear, right-hand 11
8	Coil 6	26	Stop lamp right-hand 12
9	Horn 21	27	Rear lamp right-hand 17
10	Battery 1	28	Rear lamp left-hand 15
11	Flasher unit 9	29	Direction left-hand 13
12	Regulator 3-4	30	Direction indicator lamp left-hand 9

IDENTIFICATION OF HARNESSES

Without mark : Front harness
AR : Rear harness

F.V : Jumper lead

TABLE OF BULBS

Description	Quantity	Base	Type	Voltage	Power	French standard ref.
Headlamps , Dipped/ Main beam	2	European code P.45 t. 41	Yellow selective	12 V	45/40 W	R.136-15
Direction indicator lamps Stop lamps	6	BA.15 s	Large balloon	12 V	15 W	R.136-09
Front and rear side-lamps Dashboard lighting	5	BA. 9 s		12 V	4 W	R.136-33
Ignition warning lamp	1	BA. 9 s		12 V	1.2 W	R.136-04

TABLE OF FUSES

Supply	Amp.	Colour	Units protected
Horns and lighting switch	10 A	Red	Parking lamp switch Number plate lamp Dashboard lamp
Ignition switch	16 A	Blue	Voltage regulator Windscreen wiper Petrol gauge Direction indicator lamp switch
« + » Battery	10 A	Yellow	Stop lamps Parking lamps switch → Parking lamps (right or left)

OPERATION N° AY. 510-00 a : *Arrangement of the electrical installation.*
(DYANE 12 volts 9/ 1967 ⟶ 3/ 1958).

WIRING DIAGRAM

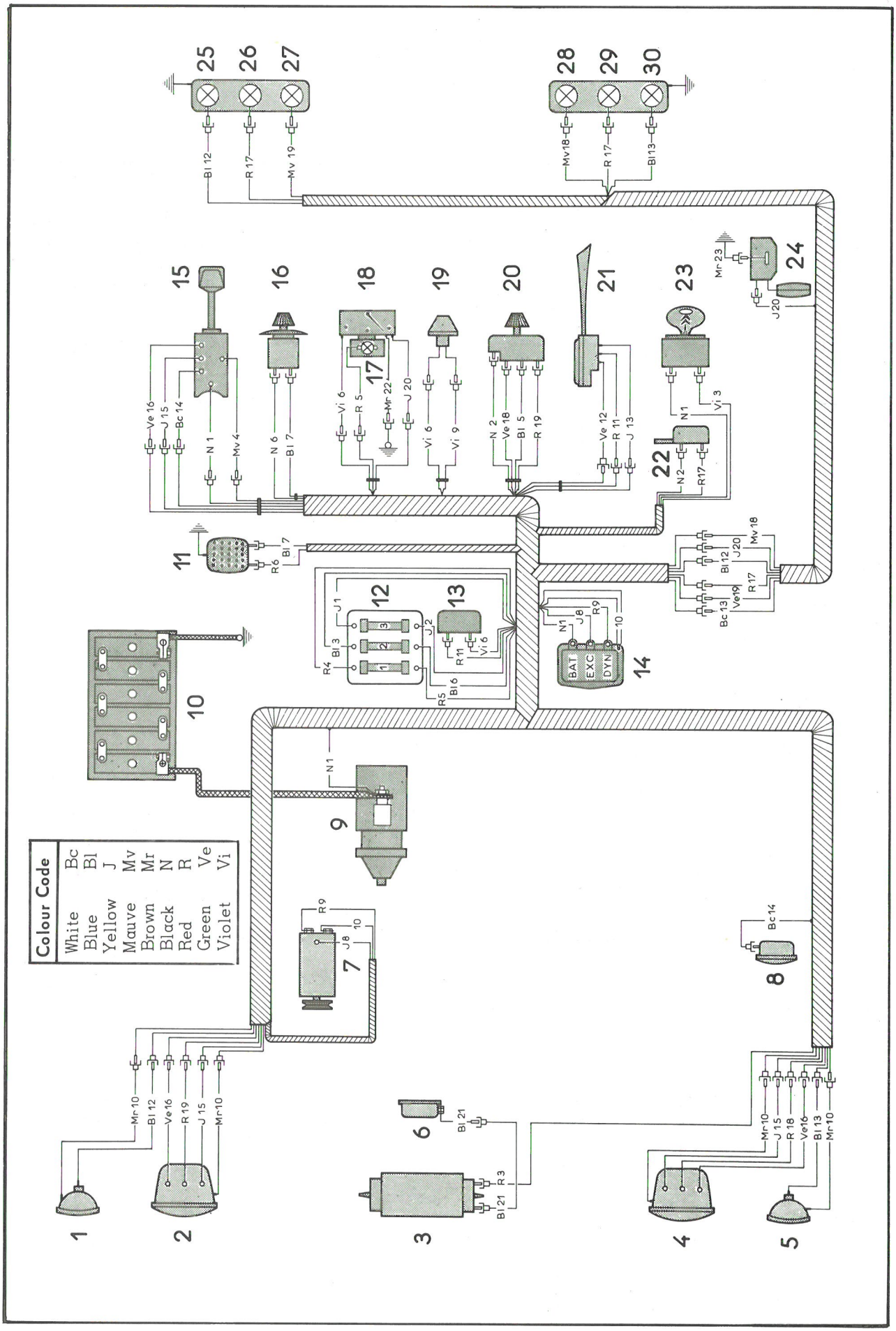

CIRCUIT DIAGRAM

P.T.O.

CIRCUIT DIAGRAM

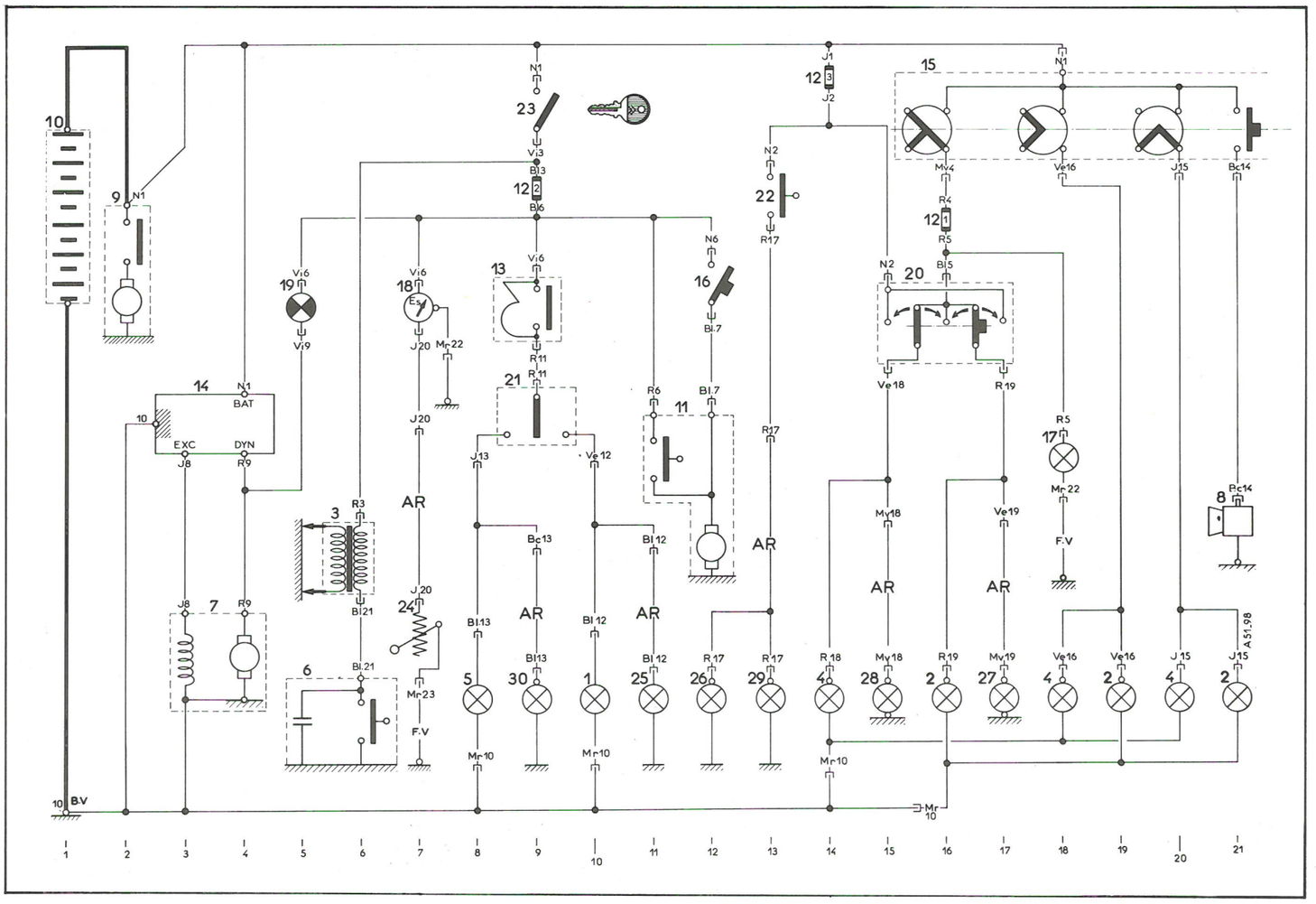

IDENTIFICATION OF PARTS

Ref.	Description	Position	Ref.	Description	Position
1	Direction indicator lamp, front right-hand	10	14	Regulator	3 - 4
2	Headlamp front, right-hand		15	Lighting and horn switch	16 to 21
	- Main beam	21	16	Windscreen wiper motor	12
	- Dipped beam	19	17	Dashboard lighting	18
	- Sidelamp	16	18	Petrol gauge	7
3	Ignition coil	6	19	Ignition warning lamp	5
4	Headlamp left-hand		20	Parking lamp switch	15 to 17
	- Main beam	20	21	Direction indicator switch	9
	- Dipped beam	18	22	Stop lamps switch	13
	- Sidelamp	14	23	Lighting switch	9
5	Direction indicator lamp, front, left-hand	8	24	Gauge rheostat	7
6	Distributor	6	25	Indicator lamp, rear, right-hand	11
7	Dynamo	3 -4	26	Stop lamp right-hand	12
8	Horn	21	27	Tail-lamp right-hand	17
9	Starter	2	28	Tail-lamp left-hand	15
10	Battery	1	29	Stop lamp left-hand	13
11	Windscreen wiper motor	11 - 12	30	Direction indicator lamp left-hand	9
12	Fuse box	16-9- 14			
13	Flasher unit	9			

IDENTIFICATION OF HARNESSES

Without mark Front harness

AR. Rear harness

F.V Jumper lead

TABLE OF BULBS

Description	Quantity	Base	Type	Voltage	Power	French standard ref.
Headlamps, Dipped/ Main beam	2	P.45 t.41	Selective Yellow	12 V	40/45 W	R.136-15
Direction indicator lamps Stop lamps	6	BA.15 s	Large balloon	12 V	15 W	R.136-09
Side lamps and tail-lamps Dashboard lighting	5	BA. 9 s		12 V	4 W	R.136-33
Interior lamp	1	BA.15 s		12 V	7 W	R.136-08
Ignition warning lamp	1	BA.9 s		12 V	1.2 W	R.136-04

TABLE OF FUSES

Supply	Amp.	Colour	Units protected
Horns and lighting switch	10 A	Red	Parking lamp switch Number plate lamp Dashboard lamp
Ignition switch	16 A	Blue	Voltage regulator Windscreen wiper Petrol gauge Direction indicator lamp switch Heating « FR - 20 » switch
« + » Battery	10 A	Yellow	Stop lamps Parking lamps switch——Parking lamps (right or left)
« + » Battery	16 A	Green	Heating system « FR - 20 »

WIRING DIAGRAM

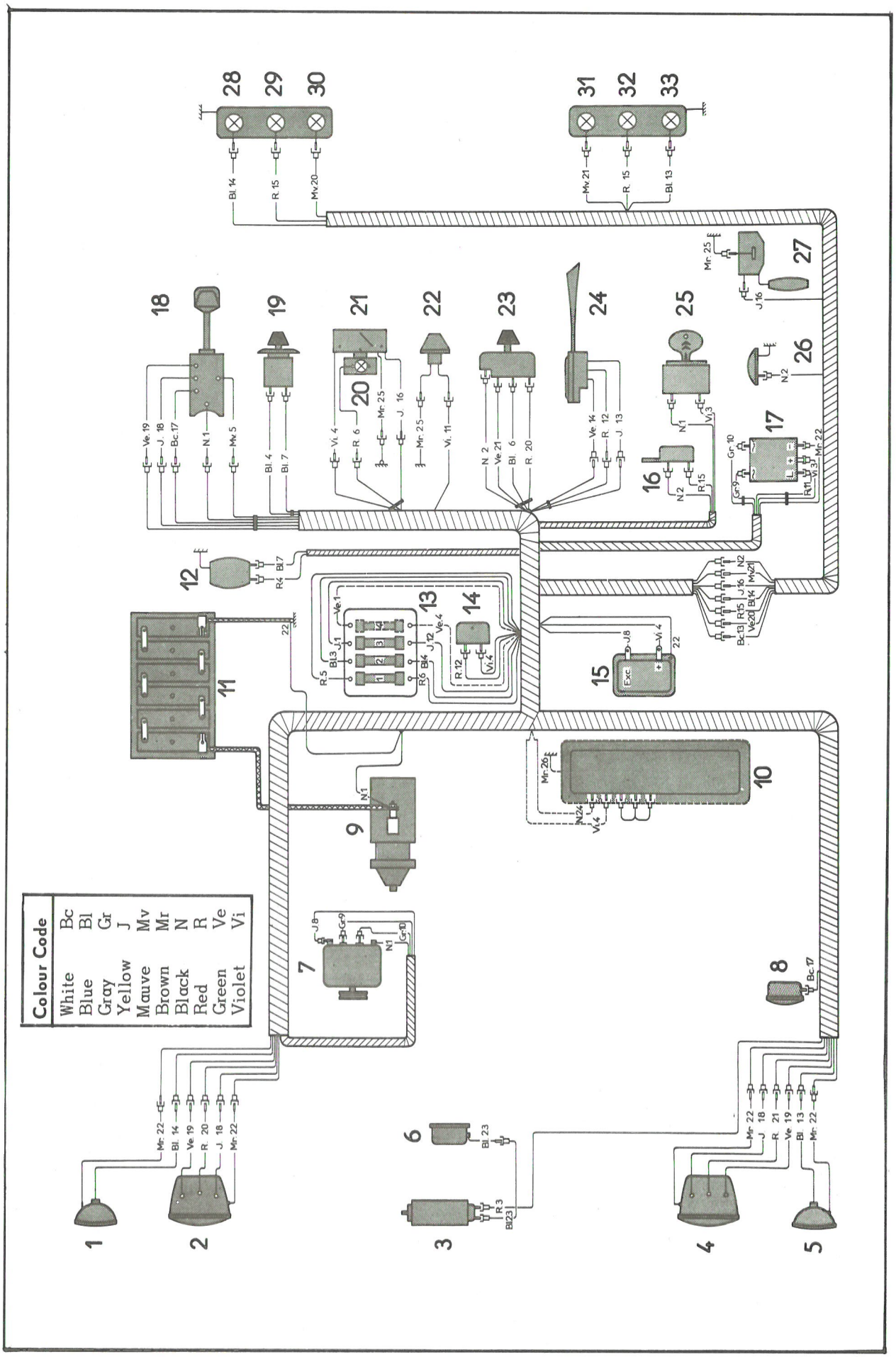

CIRCUIT DIAGRAM

P.T.O.

CIRCUIT DIAGRAM

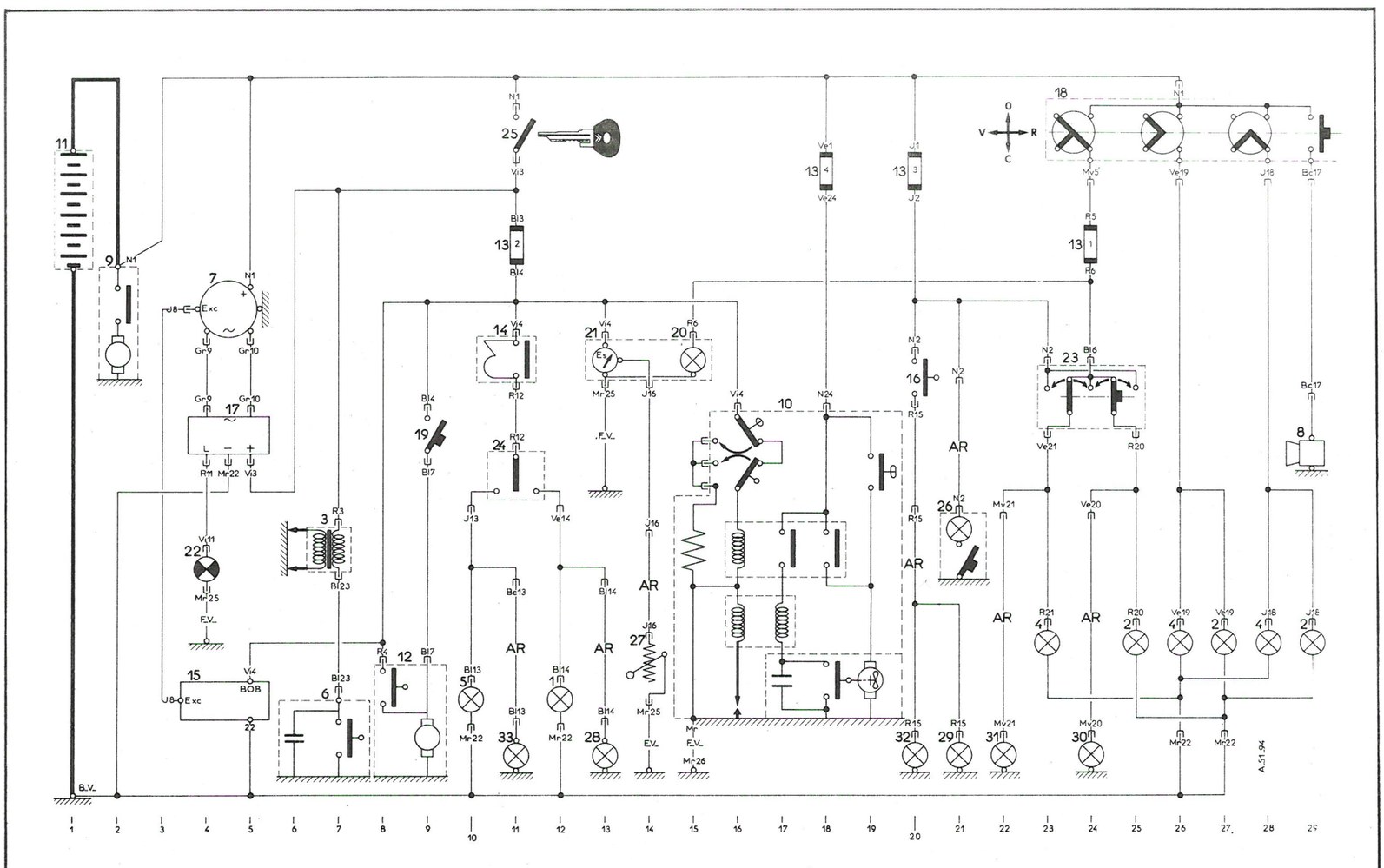

IDENTIFICATION OF PARTS

Ref.	Description	Position	Ref.	Description	Position
1	Direction indicator lamp, front right-hand	12	15	Voltage regulator	4 - 5
2	Headlamp right-hand		16	Stop switch	20
	- Main beam	29	17	Ignition warning lamp relay	5
	- Dipped beam	27	18	Lighting and horn switch	14 to 29
	- Sidelamp	25	19	Windscreen wiper switch	9
3	Ignition coil	7	20	Dashboard lighting	15
4	Headlamp left-hand		21	Petrol gauge	13
	- Main beam	28	22	Ignition warning lamp	4
	- Dipped beam	26	23	Parking lamp switch	23 to 25
	- Sidelamp	23	24	Indicator lamp switch	11
5	Direction indicator lamp, front, left-hand	10	25	Ignition switch	11
6	Distributor	7	26	Interior lamp (*P.A.*)	21
7	Alternator	4	27	Petrol gauge rheostat	14
8	Horn	29	28	Right-hand rear direction indicator	13
9	Starter	2	29	Stop lamp right-hand	21
10	- 20 Heating system (*GURTNER*)	15 to 19	30	Tail-lamp right-hand	24
11	Battery	1	31	Tail-lamp left-hand	22
12	Windscreen wiper motor	8 - 9	32	Stop lamp left-hand	20
13	Fuse box	11 - 18 - 20 - 20	33	Direction indicator lamp, rear left-hand	11
14	Flasher unit	11			

IDENTIFICATION OF HARNESSES

Without mark Front harness

AR. Rear harness

F.V Jumper lead

TABLE OF BULBS

Description	Quantity	Base	Type	Voltage	Power	French Standard Ref.
Headlamps, Dipped/ Main beam	2	P. 45 t. 41	Selective yellow	12 V	40/45 W	R. 136-15
Direction indicator lamp Stop lamps	6	BA. 15 s	Pear shaped	12 V	21 W	R. 136-12
Sidelamps	4	BA. 9 s		12 V	4 W	R. 136-33
Interior lamp	1	BA. 15 s		12 V	7 W	R. 136-08
Dashboard lighting	1	BA. 9 s		12 V	2 W	R. 136-34
Oil pressure warning lamp	1	BA. 9 s		12 V	1,2 W	R. 136-04

TABLE OF FUSES

Supply	Calibre	Colour	Units protected
Lighting switch	16 A	Red	Dashboard lighting Number plate lamp Parking lamp switch → Sidelamps and tail lamps
Ignition switch	16 A	Blue	Regulator Flasher unit → Inverser → Direction indicators Petrol gauge
« + » Battery	16 A	Yellow	Stop switch → Stoplamps Parking switch → Sidelamps and tail lamps Interior lamp
Spare	16 A		

WIRING DIAGRAM

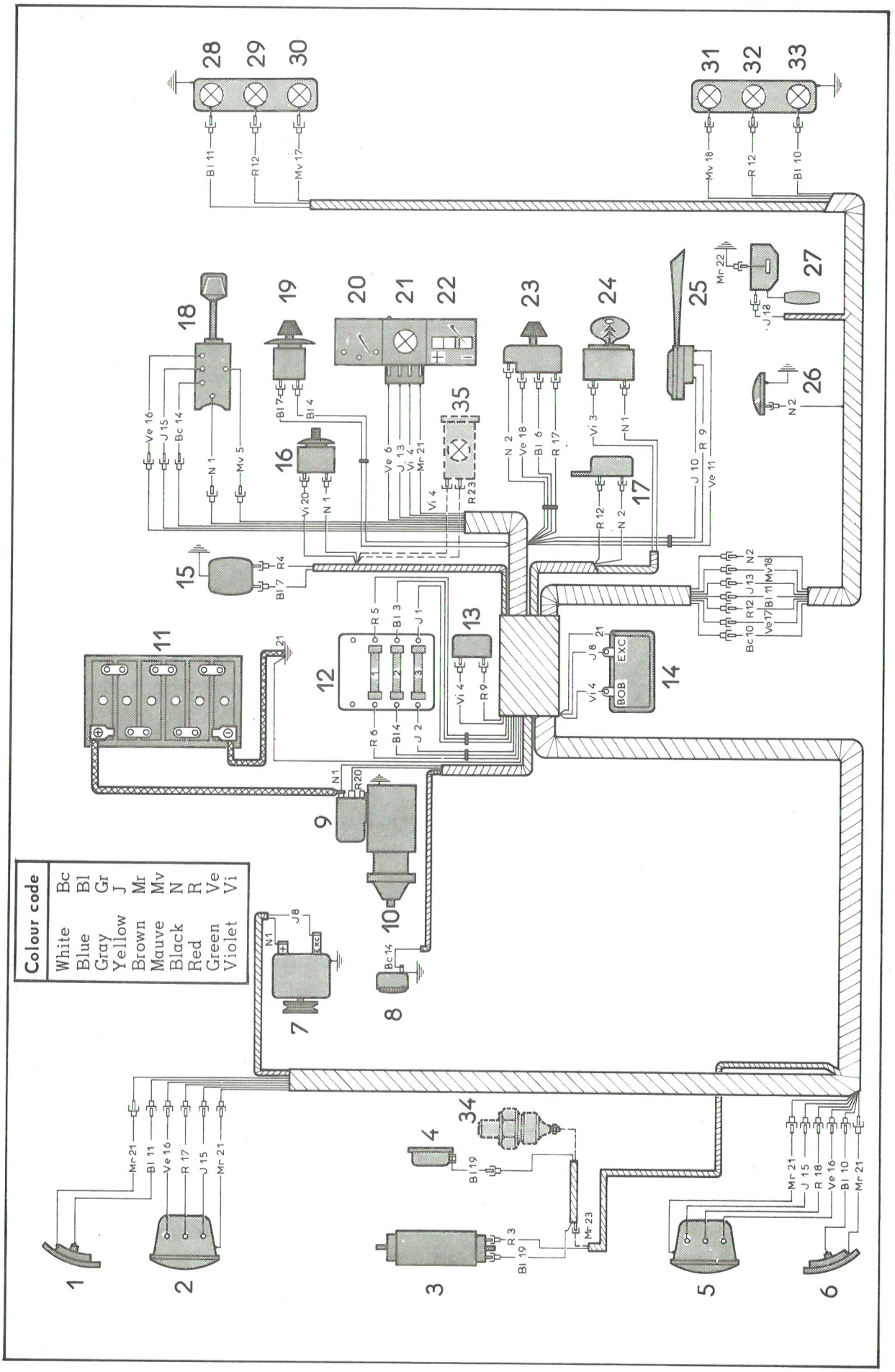

CIRCUIT DIAGRAM

P.T.O.

CIRCUIT DIAGRAM

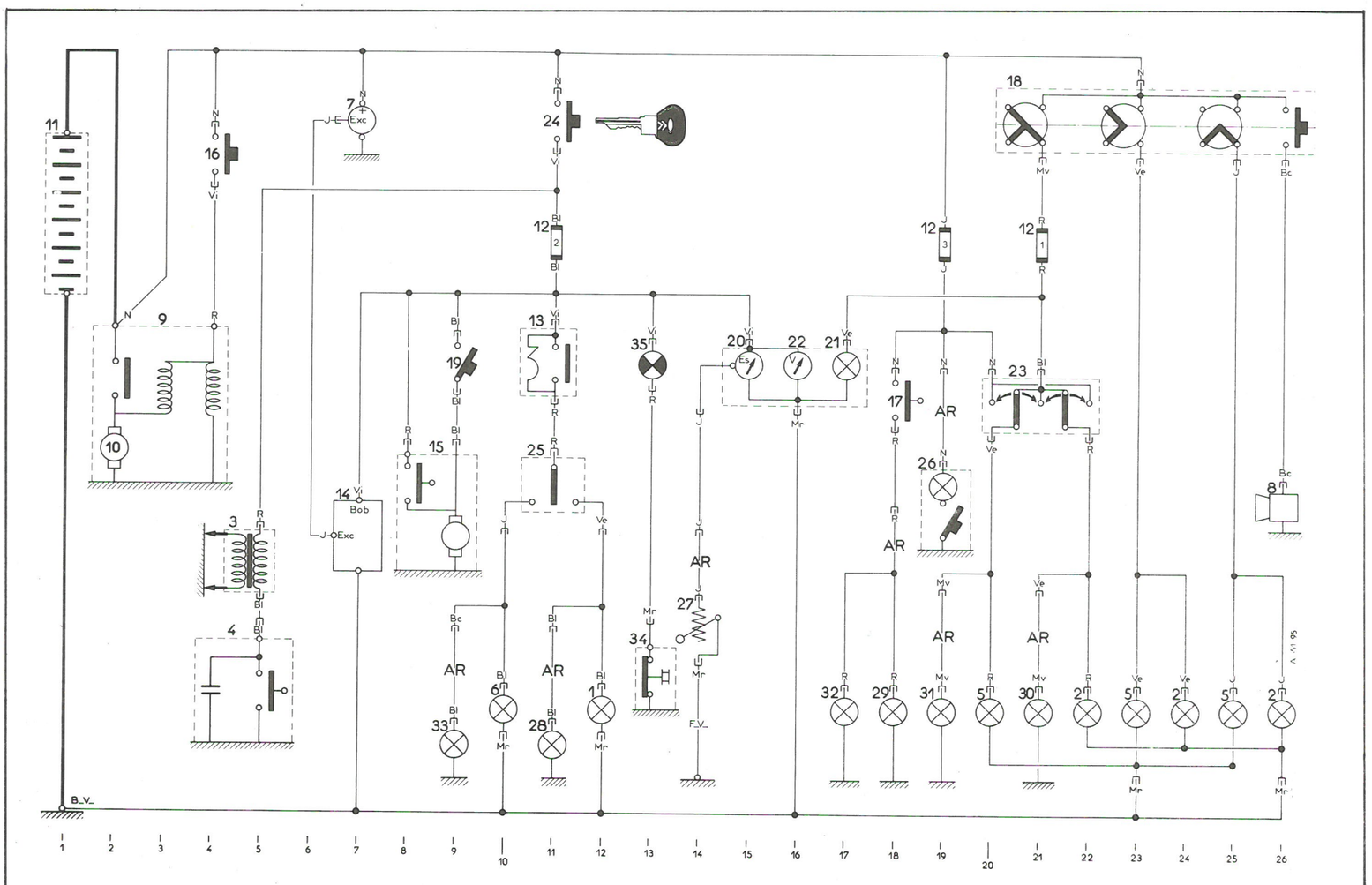

IDENTIFICATION OF PARTS

Ref.	Description and Position	Ref.	Description and Position
1	Direction indicator lamp, front, right-hand 12	16	Starter switch 4
2	Headlamp right-hand :	17	Stop lamp switch 18
	- Main beam 26	18	Lighting and horn switch ..... 21 to 26
	- Dipped beam 24	19	Windscreen wiper switch 9
	- Sidelamp 22	20	Petrol gauge 15
3	Ignition coil 5	21	Dashboard lighting 17
4	Distributor 5	22	Thermal voltmeter 16
5	Headlamp left-hand :	23	Parking lamp switch ..... 20 to 22
	- Main beam 25	24	Lighting switch 11
	- Dipped beam 23	25	Direction indicator switch 11
	- Sidelamp 20	26	Interior lamp 19
6	Direction indicator lamp left-hand 10	27	Petrol gauge rheostat 14
7	Alternator 7	28	Direction indicator lamp, rear, right-hand 11
8	Horn 26	29	Stop lamp right-hand 18
9	Starter solenoid ..... 2 to 4	30	Tail-lamp right-hand 21
10	Starter motor 2	31	Tail-lamp left-hand 19
11	Battery 1	32	Stop lamp left-hand 17
12	Fuse box 21-19- 11	33	Direction indicator lamp, rear, right-hand 9
13	Flasher unit 11	34	Engine oil pressure switch 13
14	Voltage regulator 7	35	Oil pressure warning lamp 13
15	Windscreen wiper motor ..... 8 - 9		

IDENTIFICATION OF HARNESSES

Without mark : Front main harness
AR : Rear harness

F.V. : Jumper lead

TABLE OF BULBS

Description	Quantity	Base	Type	Voltage	Power	French standard ref.
Headlamps, Main / Dipped beam	2	P.45t 41	Selective yellow	12 V	45/40 W	R.136-15
Direction indicators lamp stop lamp	6	BA. 15 s	Pear shaped	12 V	21 W	R.136-12
Sidelamps	4	BA. 9 s		12 V	4 W	R.136-33
Interior lamp	1	BA. 15 s		12 V	7 W	R.136-08
Dashboard lighting	1	BA. 9 s		12 V	2 W	R.136-34
Oil pressure warning lamp	1	BA. 9 s		12 V	1.2 W	R.136-04

TABLE OF FUSES

Supply	calibre	Colour	Units protected
« + » Battery terminal	10 A	Yellow	Switch → Stop lamps Interior lamp
Ignition switch	16 A	Blue	Voltage regulator (« + » terminal) Switch → Windscreen wiper motor Flasher unit → Inverser switch → Direc. indicators Oil pressure warning lamp Indicator → Petrol gauge rheostat Thermal voltmeter
Lighting switch (Mauve)	10 A	Green	Dashboard lighting Left-hand sidelamp and tail-lamp
	10 A	Red	Right-hand sidelamp and tail-lamp

WIRING DIAGRAM

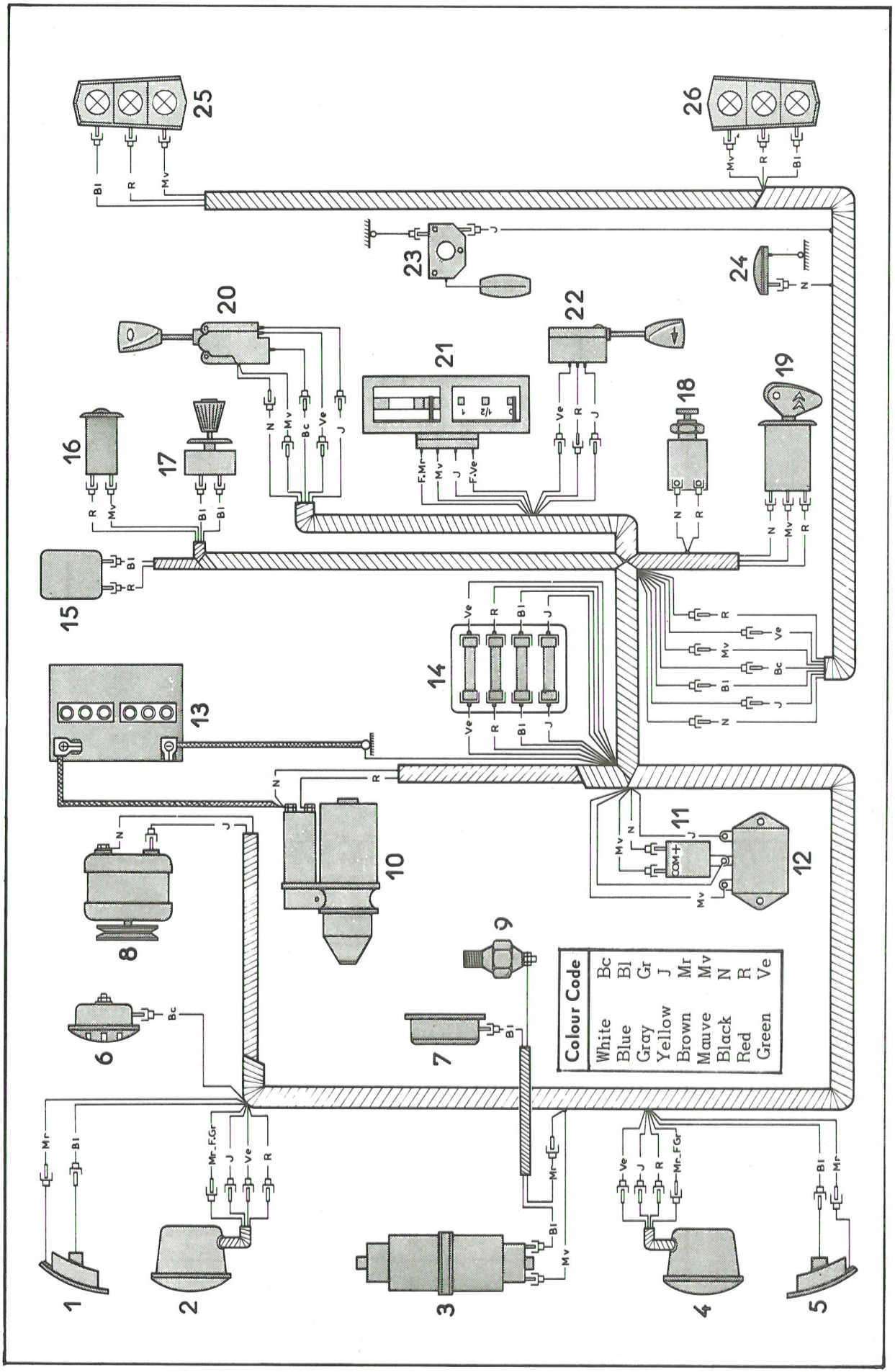

CIRCUIT DIAGRAM

P.T.O.

CIRCUIT DIAGRAM

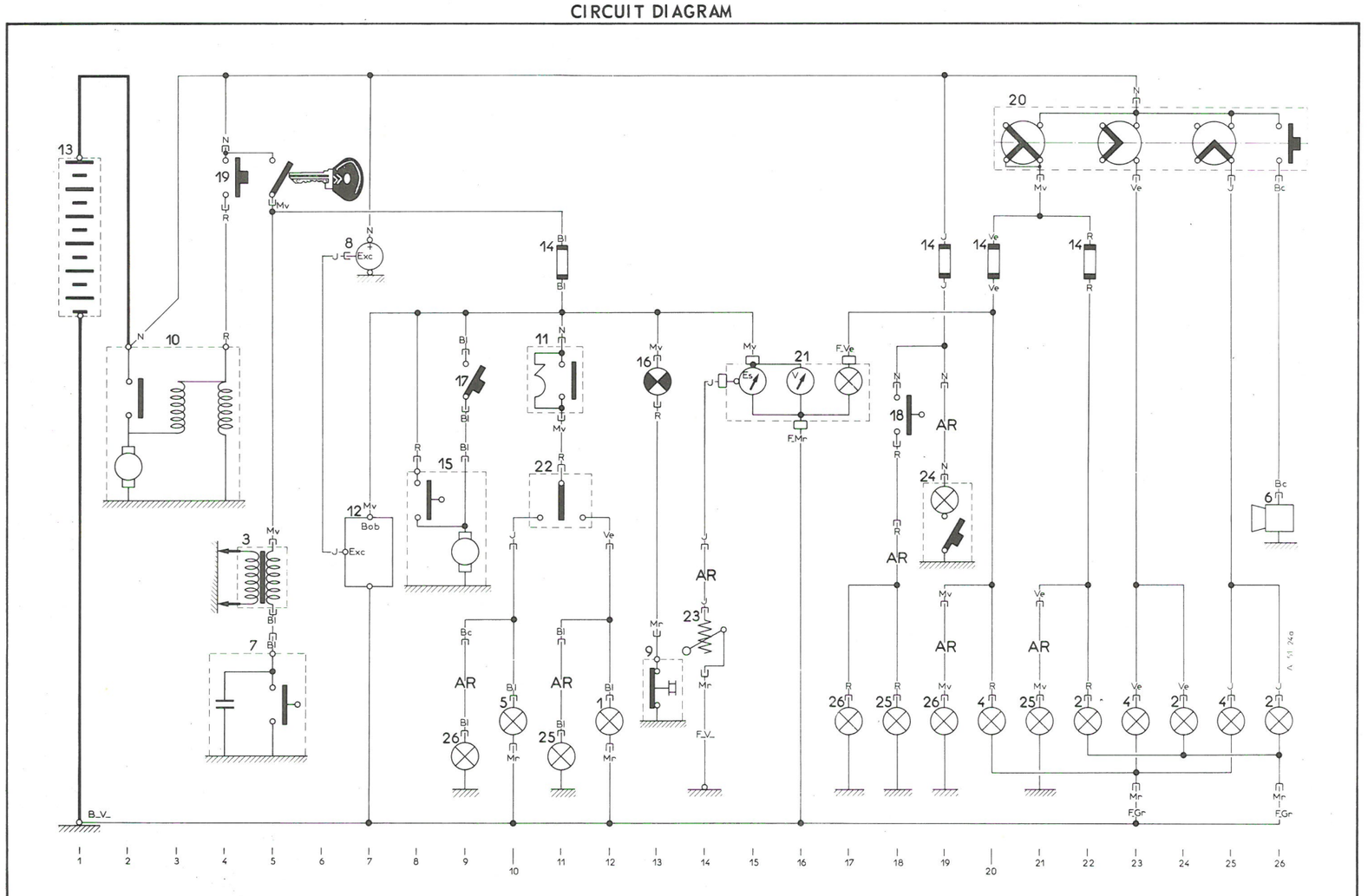

IDENTIFICATION QF PARTS

Ref.	Description	Position	Ref.	Description	Position
1	Direction indicator lamp, front right-hand	12	13	Battery	1
2	Headlamp right-hand		14	Fuse box	11 - 19 - 20 - 22
	- Main beam	26	15	Windscreen wiper motor	9
	- Dipped beam	24	16	Oil pressure warning lamp (Dyane 6)	13
	- Sidelamp	22	17	Windscreen wiper switch	9
3	Ignition coil	5	18	Brake lamp switch	18
4	Headlamp left-hand		19	Anti-theft ignition starter switch	4 - 5
	- Main beam	25	20	Horn and lighting switch	21 to 26
	- Dipped beam	23	21	Dashboard lighting	17
	- Sidelamp	20		- Thermal voltmeter and petrol gauge	16 - 15
5	Direction indicator lamp, front left-hand	10	22	Direction indicator switch	11
6	Horn	26	23	Petrol gauge rheostat	14
7	Distributor	5	24	Interior lamp	19
8	Alternator	7	25	Rear lamp cluster right-hand : tail-lamp	21
9	Engine oil pressure switch (Dyane 6)	13		- Direction indicator and stop lamps	11- 18
10	Starter	3	26	Lamp cluster rear, left-hand : tail-lamp	19
11	Flasher unit	11		- Direction indicator and stop lamps	9-17
12	Voltage regulator	7			

IDENTIFICATION OF HARNESSES

Without mark	Front harness
AR.	Rear harness
F.V.	Jumper lead

TABLE OF BULBS

Description	Quantity	Base	Voltage	Power	French standard	International type
Main or dipped beams	2	P. 45 t 41	12 V	45/40 W	R. 136-15	
Front and rear direction indicators Stop lamps	4 2	BA. 15 s/19	12 V	21 W	R. 136-12	P. 25/1
Side and tail lamps	4	BA. 9 s	12 V	4 W	R. 136-33	T. 8/4
Interior lamp	1	BA. 15 s	12 V	7 W	R. 136-08	
Dashboard lighting	1	BA. 9 s	12 V	2 W	R. 136-34	T. 8/2
Oil pressure warning lamp Hazard warning lamp Nivocode warning lamp *9/1976* →	1 1 1	BA. 9 s	12 V	4 W	R. 136-33	T. 8/4

TABLE OF FUSES

Supply	Calibre	Colour	Units protected
Lighting switch	10 A	Green	L.H. side and tail lamps Dashboard lighting } → *9/1976*
Lighting switch	10 A	Red	R.H. side and tail lamps → *9/1976*
			Side and tail lamps, L.H. and R.H. side Dashboard lighting } *9/1976* →
" + " battery	10 A	Yellow	Interior lamp Stop lamps Hazard warning device Hazard warning lamp Nivocode warning lamp *9/1976* →
" + " battery (when switching on the ignition)	16 A	Blue	Voltage regulator Windscreen wiper motor Front and rear direction indicators Oil pressure warning lamp *(Dyane 6)* Voltmeter and fuel gauge sender unit

A. 51-108 a

WIRING DIAGRAM

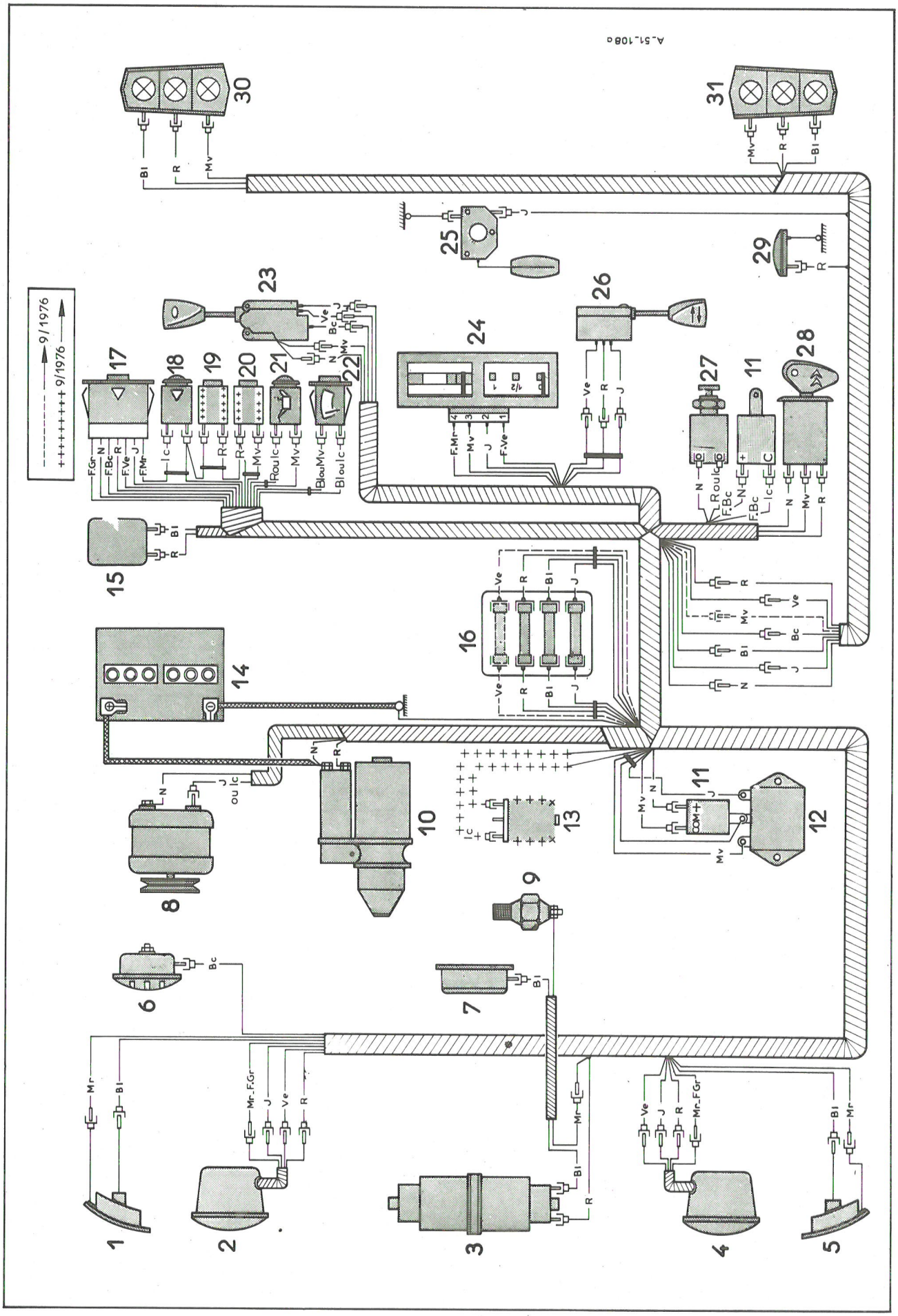

CIRCUIT DIAGRAM

P.T.O.

A. 51-107 b

CIRCUIT DIAGRAM

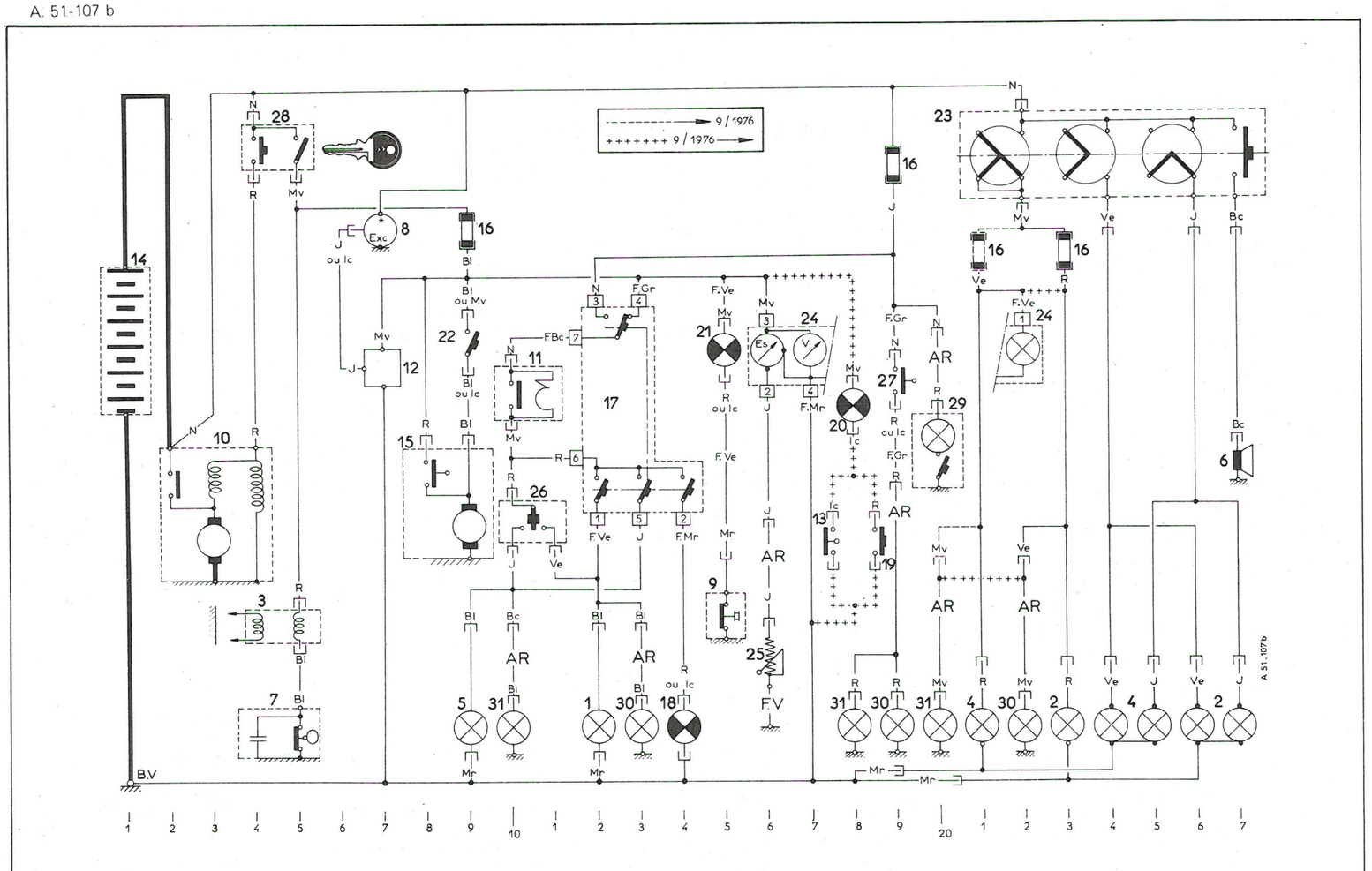

IDENTIFICATION OF PARTS

Ident. mark	Description and Position	Ident. mark	Description and Position
1	Front direction indicator, R.H. side 12	18	Hazard warning lamp 14
2	Headlamp, R.H. side :	19	Test-button for Nivocode warning lamp 18
	– Main beam 27	20	Nivocode warning lamp 18
	– Dipped beam 26	21	Oil pressure warning lamp 15
	– Side lamp 23	22	Windscreen wiper switch 9
3	Ignition coil 4-5	23	Lighting switch ..... 21 to 27
4	Headlamp, L.H. side :	24	Dashboard :
	– Main beam 25		– Dashboard lighting 22
	– Dipped beam 24		– Thermal voltmeter 17
	– Side lamp 21		– Petrol gauge sender unit 16
5	Front direction indicator, L.H. side 9	25	Petrol gauge rheostat 16
6	Horn 27	26	Direction indicator switch 10-11
7	Distributor 4-5	27	Stop lamp switch 19
8	Alternator 7	28	Anti-theft ignition switch 4-5
9	Engine oil pressure switch *(Dyane 6)* 15	29	Interior lamp 20
10	Starter ..... 2 to 4	30	Rear lamp cluster, R.H. side :
11	Flasher unit *(on scuttle panel, at engine end → 9/75)* 10-11		– Direction indicator 13
			– Stop lamp 19
12	Voltage regulator 7		– Tail lamp 22
13	Switch for brake fluid level on the reservoir 17	31	Rear lamp cluster, L.H. side :
14	Battery 1		– Direction indicator 10
15	Windscreen wiper motor 8-9		– Stop lamp 18
16	Fuse box 9-19-21-23		– Tail lamp 20
17	Hazard warning switch ..... 12 to 14		

IDENTIFICATION OF HARNESSES

Without identification mark	Front harness	**F.V.**	Flying lead
AR	Rear harness		

TABLE OF BULBS

Description	Quantity	Base	Voltage	Power	French standard	International type
Main or dipped beams	2	P. 45 t 41	12 V	45/40 W	R. 136-15	
Front and rear direction indicators	4	BA. 15 s/19	12 V	21 W	R. 136-12	P. 25/1
Stop and tail lamps	2	BAY. 15 d/19	12 V	21/5 W	R. 136-12	P. 25/2
Front side lamps	2	BA. 9 s	12 V	4 W	R. 136-33	T. 8/4
Number plate lamp	1	BA. 9 s	12 V	4 W	R. 136-33	T. 8/4
Interior lamp	1	BA. 15 s	12 V	7 W	R. 136-08	
Oil pressure warning lamp Hazard warning lamp Nivocode warning lamp	1 1 1	BA. 9 s	12 V	4 W	R. 136-33	T. 8/4
Warning lamps for : – Direction indicators – Headlamps	 1 1	BA. 9 s	12 V	4 W	R. 136-33	T. 8/4
Dashboard lighting	1	BA. 9 s	12 V	2 W	R. 136-34	T. 8/2

TABLE OF FUSES

Supply	Calibre	Colour	Units protected
" + " battery (when switching on the ignition)	16 A	Blue	Windscreen wiper Voltage regulator Warning lamps for oil pressure and Nivocode Voltmeter and fuel gauge sender unit
" + " battery	10 A	Yellow	Stop lamps Interior lighting Hazard warning device
Lighting switch	10 A	Red	Dashboard lighting Side and tail lamps Number plate lamp

A. 51-120

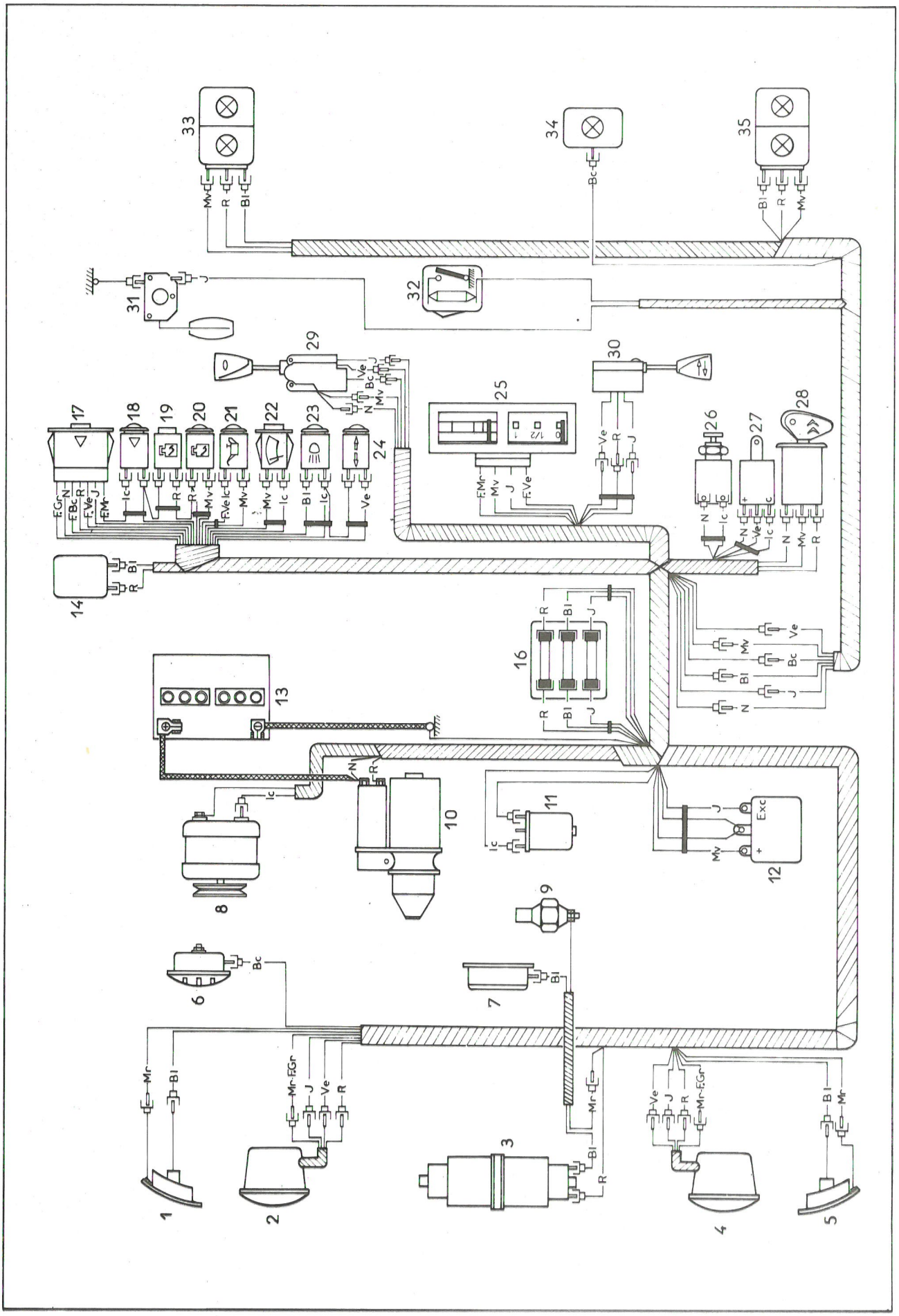

WIRING DIAGRAM

CIRCUIT DIAGRAM

P.T.O.

A. 51-122

CIRCUIT DIAGRAM

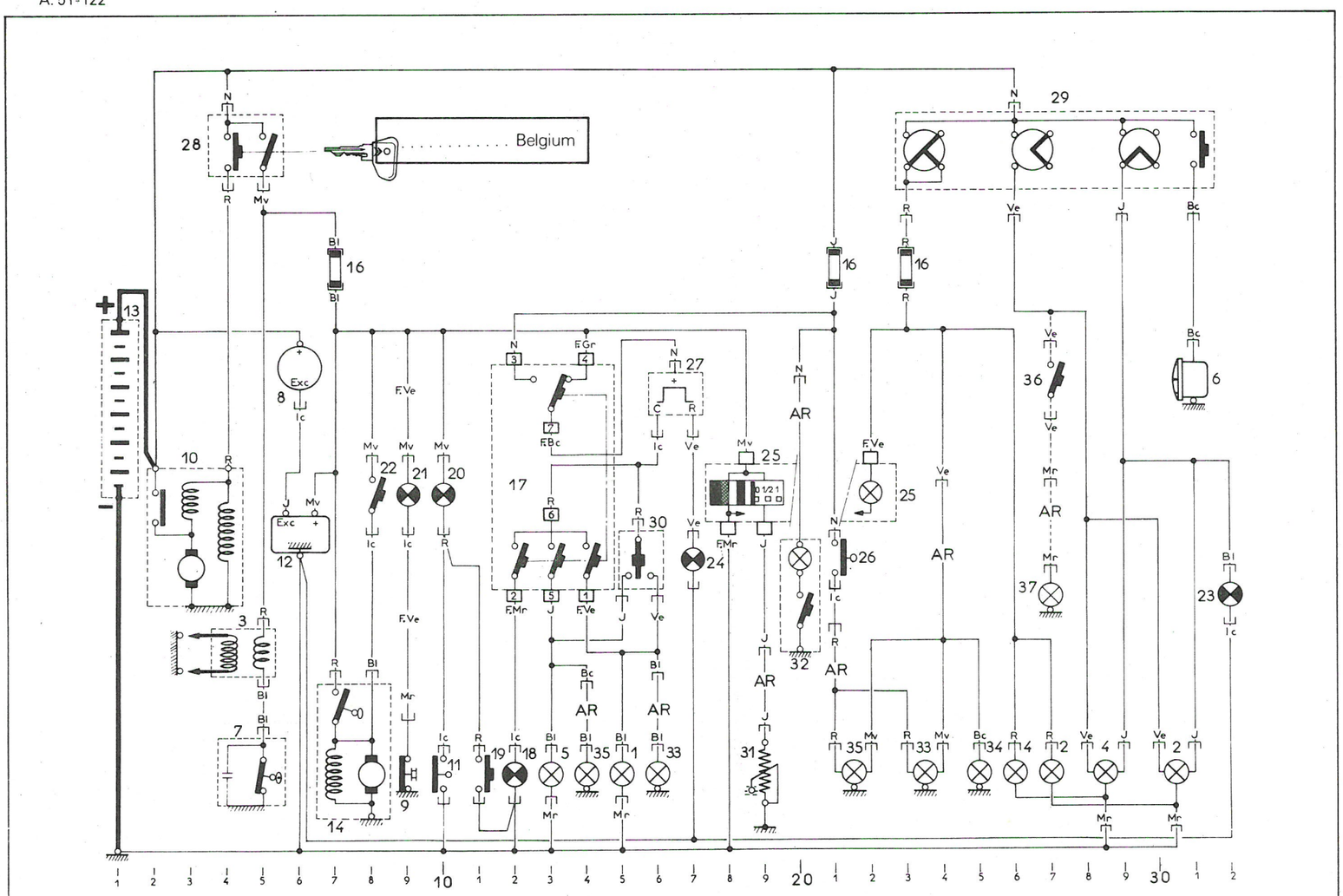

IDENTIFICATION OF PARTS

Ident. mark	Description and Position	Ident. mark	Description and Position
1	Front direction indicator, R.H. side 15	21	Oil pressure warning lamp 9
2	Main beam, R.H. side 31	22	Windscreen wiper switch 8
	Dipped beam, R.H. side 30	23	Headlamp warning lamp 32
	Front side lamp, R.H. side 27	24	Direction indicator warning lamp 17
3	Ignition coil 4-5	25	Dashboard :
4	Main beam, L.H. side 29		– Dashboard lighting 22
	Dipped beam, L.H. side 28		– Thermal voltmeter 18
	Front side lamp, L.H. side 26		– Petrol gauge sender unit 19
5	Front direction indicator, L.H. side 13	26	Stop lamp switch 21
6	Horn 31	27	Flasher unit 16-17
7	Distributor 4-5	28	Anti-theft ignition switch 4-5
8	Alternator 6	29	Lighting switch ..... 23 to 31
9	Engine oil pressure switch 9	30	Direction indicator switch 15-16
10	Starter ..... 2 to 4	31	Petrol gauge rheostat 19
11	Switch for brake fluid level on reservoir 10	32	Interior lamp 20
12	Voltage regulator 6	33	Stop and tail lamps, R.H. side 23-24
13	Battery 1		Rear direction indicator, R.H. side 16
14	Windscreen wiper motor 7-8	34	Number plate lamp 25
16	Fuse box 7-21-23	35	Stop and tail lamps, L.H. side 21-22
17	Hazard warning switch ..... 12 to 14	36	Switch for rear fog lamps *(Belgium)* 27
18	Hazard warning lamp 12	37	Rear fog lamps *(Belgium)* 27
19	Test-button for Nivocode warning lamp 11		
20	Nivocode warning lamp 10		

IDENTIFICATION OF HARNESSES

Without identification mark	Front harness	**AR**	Rear harness

The diagrams for Dyane and Acadiane vehicles are grouped in the same operation. The rear harnesses are the only ones that differ. The diagram given here is that of the Acadiane. For the Dyane rear harness see Operation AY. 510-00 e.

TABLE OF BULBS ON DYANE

Description	Quantity	Base	International type	Voltage	Power
Main and dipped beams	2	P.45 t.41	E. 2	12 V	45/40 W
Front and rear direction indicators Stoplamps	4 2	BA. 15 s/19	P. 25/1	12 V	21 W
Side and tail lamps Oil pressure warning lamp Hazard warning indicator lamp Nivocode warning lamp Direction indicator warning lamp Main beam indicator lamp	4 1 1 1 1 1	BA. 9 s	T. 8/4	12 V	4 W
Choke indicator lamp	1	Wedge base	dia. = 5 mm	12 V	1.2 W
Dashboard lighting	1	BA. 9 s	T. 8/2	12 V	2 W
Indicator lighting	1	BA. 15 s		12 V	7 W

TABLE OF BULBS ON ACADIANE

Description	Quantity	Base	International type	Voltage	Power
Main and dipped beams	2	P.45 t.41	E. 2	12 V	45/40 W
Front and rear direction indicators	4	BA. 15 s/19	P. 25/1	12 V	21 W
Stop lamps and tail lamps	2	BAY.15 d/19	P. 25/2	12 V	21/5 W
Side lamps Number plate lighting Oil pressure warning lamp Hazard warning indicator lamp Nivocode warning lamp Direction indicator warning lamp Main beam indicator lamp	2 1 1 1 1 1 1	BA. 9 s	T. 8/4	12 V	4 W
Choke indicator lamp	1	Wedge base	dia. = 5 mm	12 V	1.2 W
Dashboard lighting	1	BA. 9 s	T. 8/2	12 V	2 W
Interior lighting	1	BA. 15 s		12 V	7 W

Supplement No. 2 to Manual 816-2 (ADD)

WIRING DIAGRAM

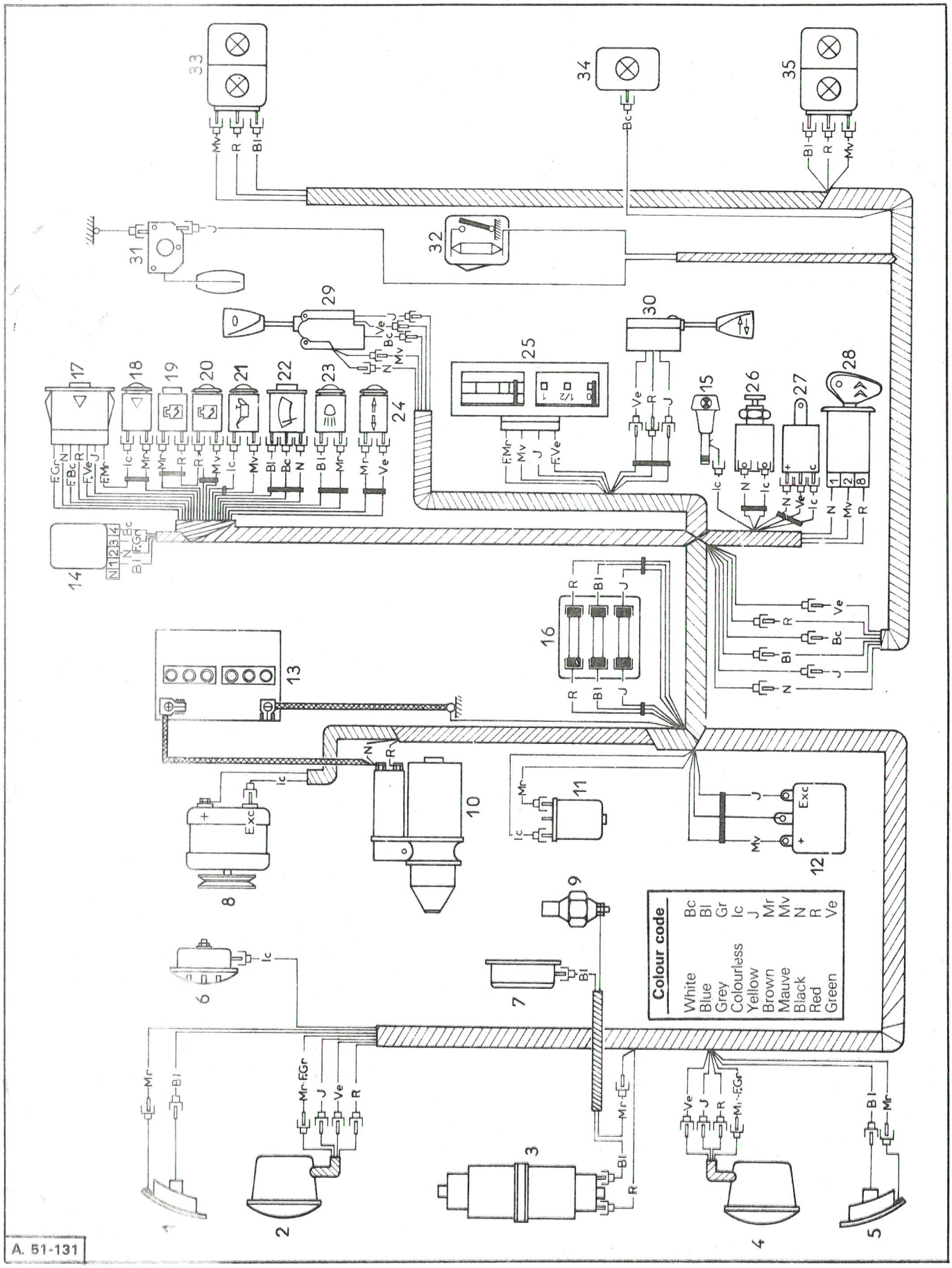

CIRCUIT DIAGRAM

P.T.O.

TABLE OF FUSES

Supply	Calibre	Colour	Units protected
« + » battery (When switching on the ignition)	16 A	Blue	Windscreen wiper Voltage regulator Oil pressure and Nivocode warning lamps Direction indicators and warning lamp Voltmeter and fuel gauge sender unit Choke indicator lamp
« + » battery	10 A	Yellow	Stop lamp Interior lamp Hazard warning lamps
Lighting switch	10 A	Red	Dashboard lighting Side and tail lamps Number plate lighting (Acadiane)

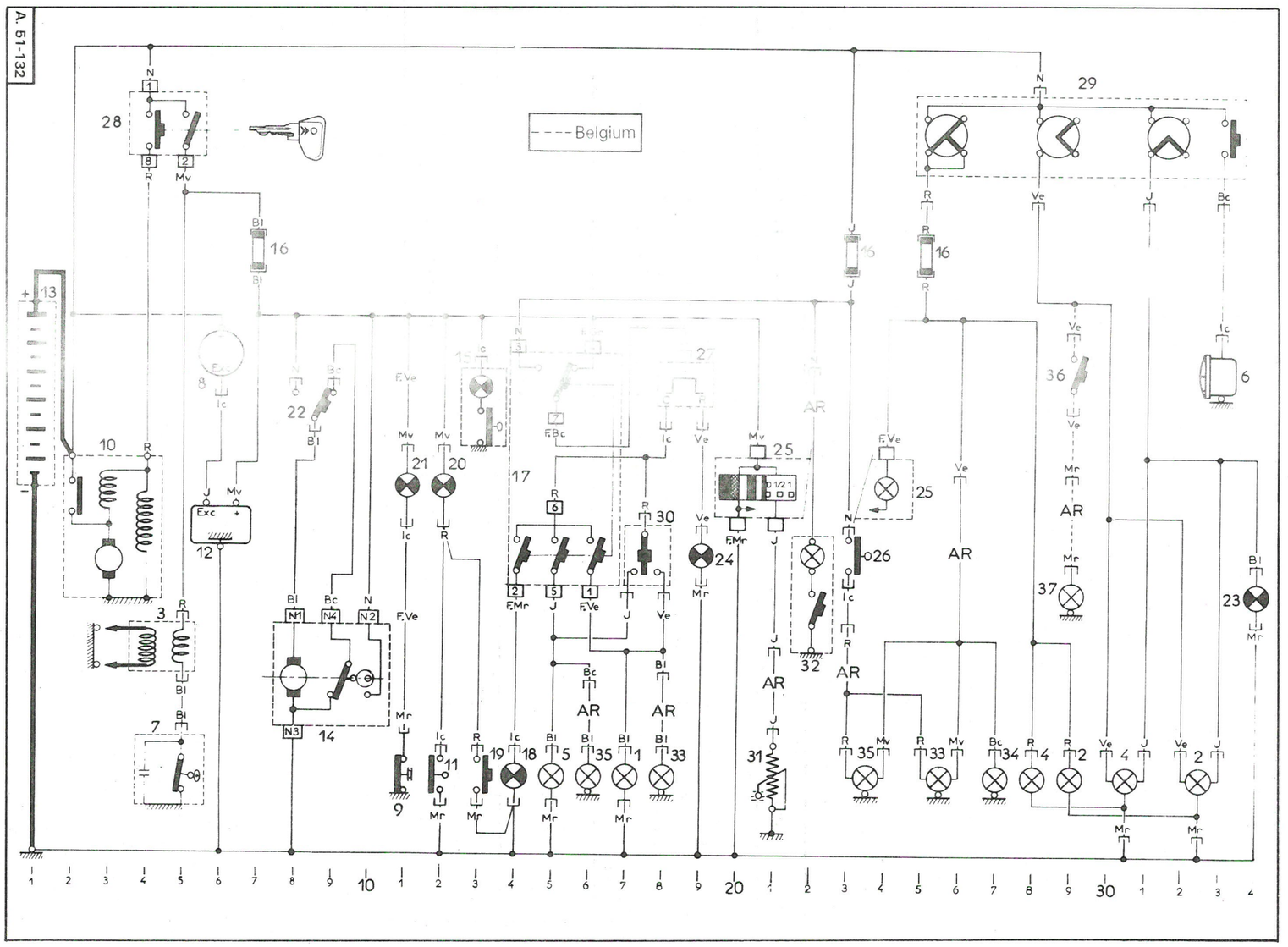

IDENTIFICATION OF PARTS

Ident. mark	Description ..... Position	Ident. mark	Description ..... Position
1	Front direction indicator, R.H. side 17	21	Engine oil pressure warning lamp 11
2	Headlamp, R.H. side : - Main beam 33	22	Windscreen wiper switch ..... 8 - 9
	- Dipped beam 32	23	Main beam indicator lamp (depending on model) 34
	- Front side lamp 29	24	Direction indicator warning lamp (depending on model) 19
3	Ignition coil ..... 4 - 5	25	Dashboard :
4	Headlamp, L.H. side : - Main beam 31		- Lighitng 24
	- Dipped beam 30		- Thermal voltmeter 20
	- Front side lamp 28		- Fuel gauge sender unit 21
5	Front direction indicator, L.H. side 15	26	Stoplamp switch 23
6	Horn 33	27	Flasher unit ..... 18 - 19
7	Distributor ..... 4 - 5	28	Anti-theft ignition switch ..... 4 - 5
8	Alternator 6	29	Lighting switch and horn ..... 25 to 33
9	Engine oil pressure switch 11	30	Direction indicator switch ..... 17 - 18
10	Starter ..... 2 to 4	31	Petrol gauge rheostat 21
11	Level switch on brake fluid reservoir 12	32	Interior lamp 22
12	Voltage regulator ..... 6 - 7	33	Rear lamp cluster, R.H. side :
13	Battery 1		- Stoplamp and side lamp ..... 25 - 26
14	Windscreen wiper motor ..... 8 to 10		- Direction indicator 18
15	Choke control with built-in indicator lamp 13	34	Number plate lighting (Acadiane) 27
16	Fuse box ..... 7 - 23 - 25	35	Rear lamp cluster, L.H. side :
17	Switch for hazard warning device ..... 14 to 16		- Stoplamp and tail lamp ..... 23 - 24
18	Hazard warning indicator lamp 14		- Direction indicator 16
19	Test-button for brake fluid warning lamp 13	*(36)*	Switch for rear fog lamp *(Belguim)* 29
20	Brake fluid level warning lamp 12	*(37)*	Rear fog lamps *(Belguim)* 29

IDENTIFICATION OF HARNESSES

Without ident. mark	Front harness	**F.V**	Flying lead
		AR	Rear Harness

TABLE OF BULBS

Description	Quantity	Base	Voltage	Power	French standard	International type
Main or dipped beams	2	P. 45 t 41	12 V	45/40 W	R. 136-15	
Front and rear direction indicators	4	BA. 15 s/19	12 V	21 W	R. 136-12	P. 25/1
Front side lamp Number plate lamp	2 2	BA. 15 s/19	12 V	5 W	R. 136-13	R. 19/5
Stop and tail lamps	2	BAY. 15 d/19	12 V	21/5 W	R. 136-12	P. 25/2
Interior lamp	1	Festoon	12 V	5 W	R. 136-14	C. 11
Dashboard lighting	1	BA. 9 s	12 V	2 W	R. 136-34	T. 8/2
Oil pressure warning lamp Hazard warning lamp Nivocode warning lamp	1 1 1	BA. 9 s	12 V	4 W	R. 136-33	T. 8/4

TABLE OF FUSES

Supply	Calibre	Colour	Units protected
" + " battery	16 A	Blue	Regulator Windscreen wiper/washer Oil pressure warning lamp Thermal voltmeter - gauge sender unit Front and rear direction indicators Hazard warning lamp Accessory terminal → 9/1975
" + " battery	16 A	Yellow	Stop lamps Interior lamp Nivocode warning lamp (hydraulic level in the reservoir)
Lighting switch	10 A	Green	Dashboard lighting Side and tail lamps, R.H. side Number plate lamp } → *9/1976*
Lighting switch	10 A	Red	Side and tail lamps, L.H. side → *9/1976*
			Side and tail lamps, L.H. and R.H. side Dashboard lighting Number plate lamp } *9/1976* →

A. 51-109 a

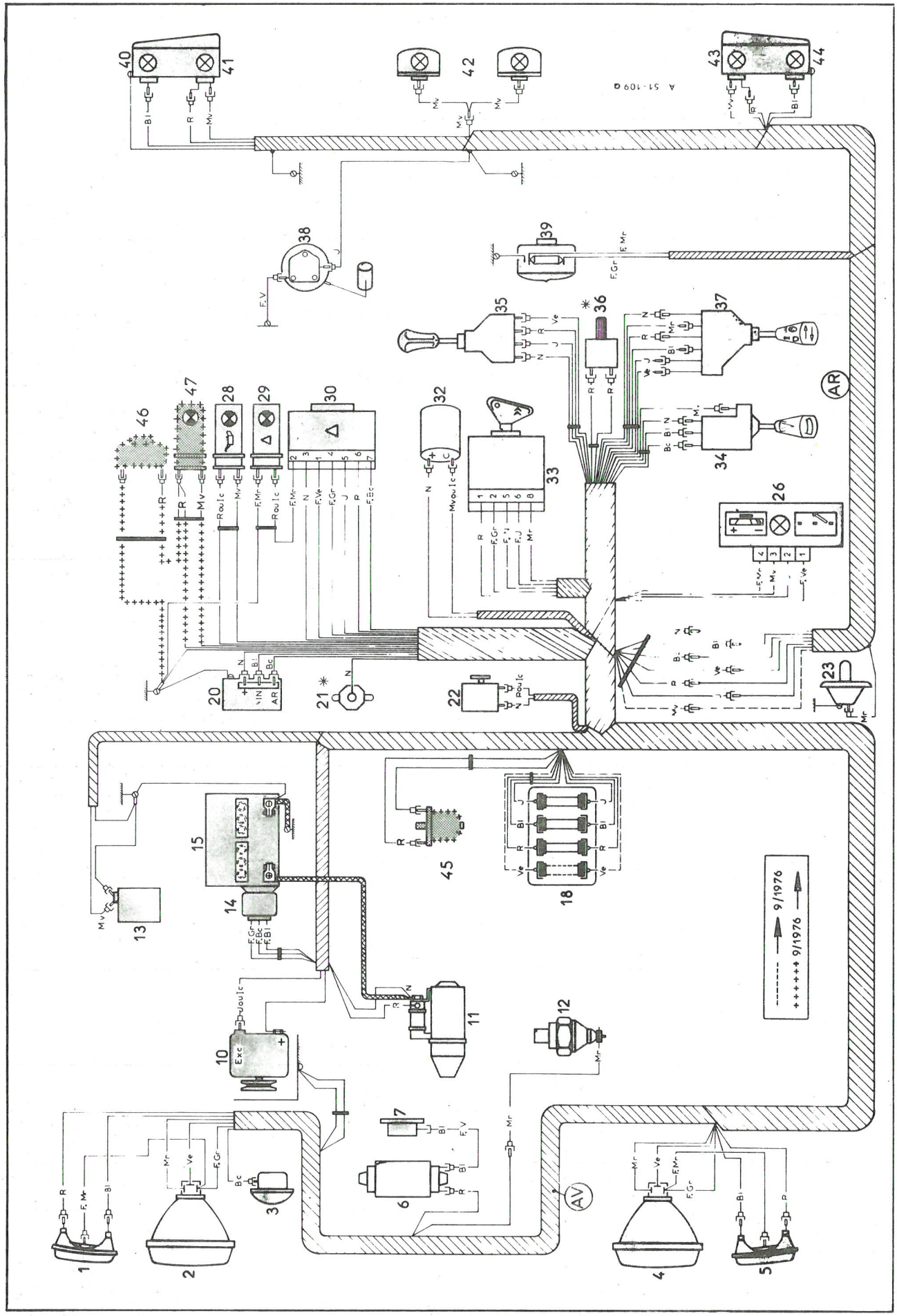

CIRCUIT DIAGRAM

P.T.O.

CIRCUIT DIAGRAM

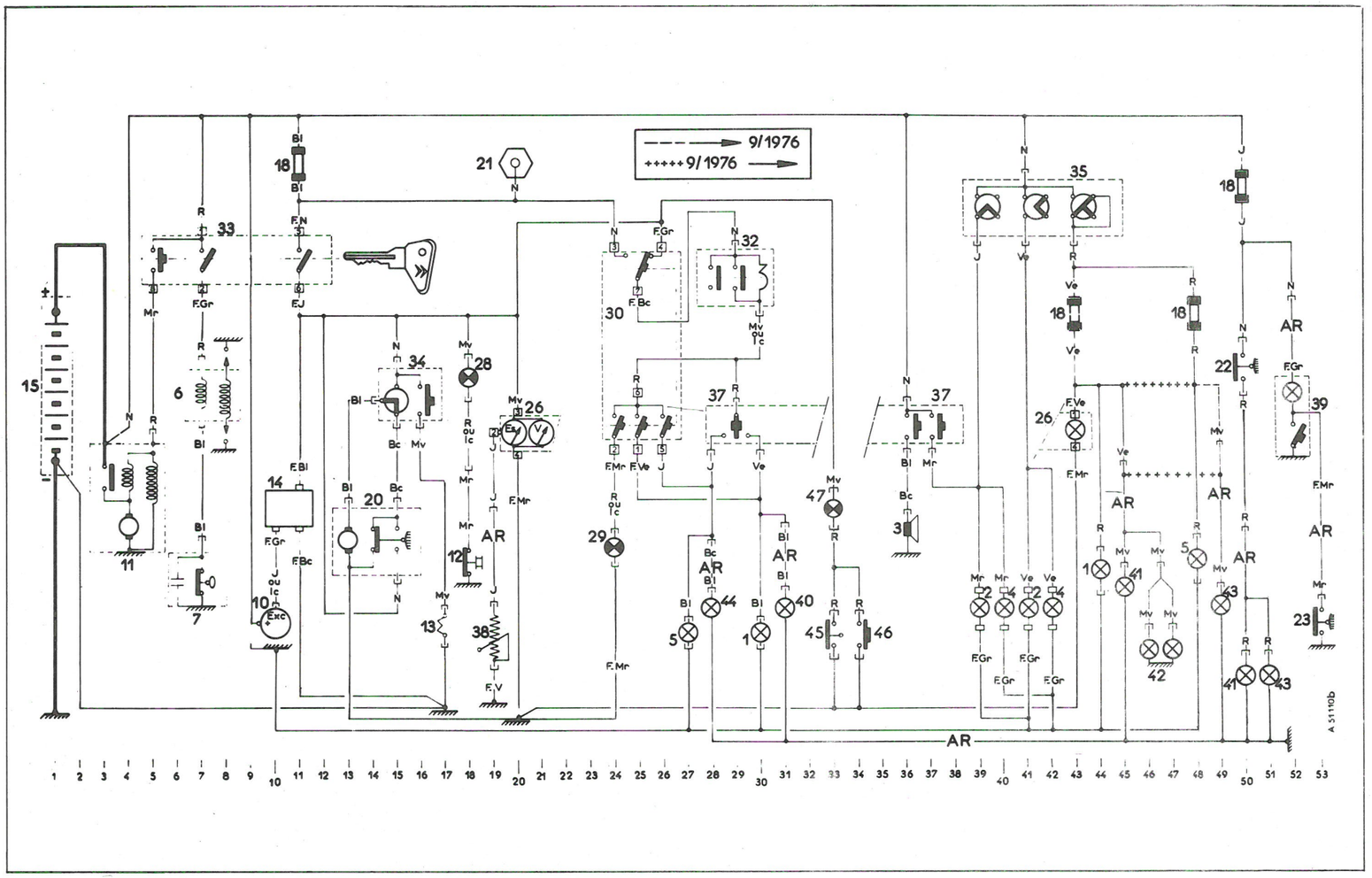

IDENTIFICATION OF PARTS

Ident. mark	Description and Position	Ident. mark	Description and Position
1	Direction indicator and front side lamp cluster, R.H. side :	23	Door lighting switch 53
	– Direction indicator 30	26	Voltmeter-petrol gauge sender unit 20-21-43
	– Front side lamp 44	28	Oil pressure warning lamp 18
2	Headlamp, R.H. side :	29	Hazard warning lamp 24
	– Main beam 39	30	Hazard warning switch ..... 24 to 26
	– Dipped beam 41	32	Flasher unit 29-30
3	Horn 36	33	Anti-theft ignition switch 5-11
4	Headlamp, L.H. side :	34	Windscreen wiper/washer switch 15-16
	– Main beam 40	35	Lighting switch ..... 39 to 44
	– Dipped beam 42	36	Dashboard lighting rheostat ⟶ *9/1975*
5	Direction indicator and front side lamp, L.H. side :	37	Switch for direction indicators, horn and flashers ..... 29 to 37
	– Direction indicator 27	38	Petrol gauge rheostat 19
	– Front side lamp 48	39	Interior lamp 52
6	Ignition coil 7-8	40	Rear direction indicator, R.H. side 31
7	Distributor 6-7	41	Stop and tail lamps, R.H. side :
10	Alternator 20		– Stop lamp 50
11	Starter ..... 3 to 5		– Tail lamp 45
12	Engine oil pressure switch 18	42	Number plate lamp 46-47
13	Windscreen washer pump 17	43	Stop and tail lamps, L.H. side
14	Regulator 20-21		– Stop lamp 51
15	Battery 1		– Tail lamp 49
18	Fuse box 11-43-48-50	44	Rear direction indicator, L.H. side 28
20	Windscreen wiper motor ..... 13 to 15	45	Switch on Nivocode 33
21	Accessory terminal *9/1975* 20	46	Push-button checking the Nivocode warning lamp . 34
22	Stop lamp switch 50	47	Nivocode warning lamp 33

IDENTIFICATION OF HARNESSES

Without identification mark	Front harness	**F.V.**	Flying lead
AR	Rear harness		

TABLE OF BULBS

Description	Quantity	Base	Type	Voltage	Power	French Standard Ref.
Headlamps, Dipped/ Main beam	2	P. 45 t. 41	Selective yellow	12 V	45/40 W	R. 136-15
Direction indicator lamp	4	BA. 15 s or BA. 15s/19	Large Balloon Pear shaped	12 V 12 V	15 W 21 W	R. 136-09 R. 136-12
Front sidelamp Number plate lamp	3	BA. 9 s		12 V	4 W	R. 136-33
Tail lamp and Stop lamp	2	BAY.15d/19 or BAY.15d/19	Large Balloon Pear shaped	12 V 12 V	18/4 W 21/5 W	R. 136-11 R. 136-12
Ignition warning lamp	1	BA. 9 s		12 V	1,2 W	R. 136-04
Dashboard lighting	1	BA. 9 s	Low Brilliance	12 V	2 W	R. 136-04
Oil pressure warning lamp	1	BA. 9 s		12 V	2 W	R. 136-34

TABLE OF FUSES

Current supply	FUSES		Equipment protected
	Capacity	Colour	
Lighting and horn switch	16 A	Red	Parking lamp switch Dashboard lighting Number plate lamp
Lighting switch	16 A	Blue	Windscreen wiper motor Petrol gauge Voltage regulator Flasher unit
Positive battery terminal	16 A	Yellow	Stop lamps and stop switch Parking lamps, right and left-hand
Spare	16 A		

WIRING DIAGRAM

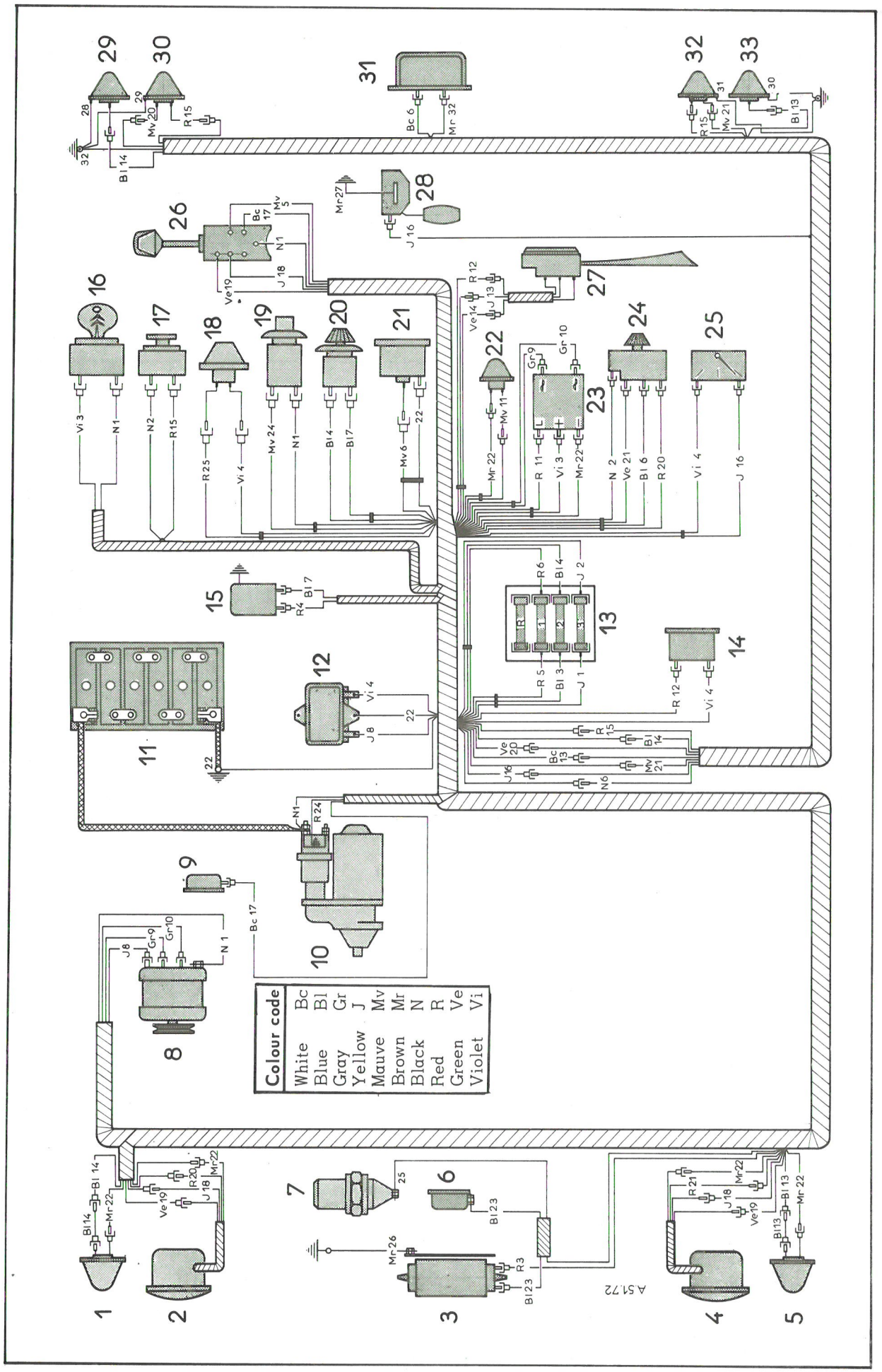

CIRCUIT DIAGRAM

P.T.O.

CIRCUIT DIAGRAM

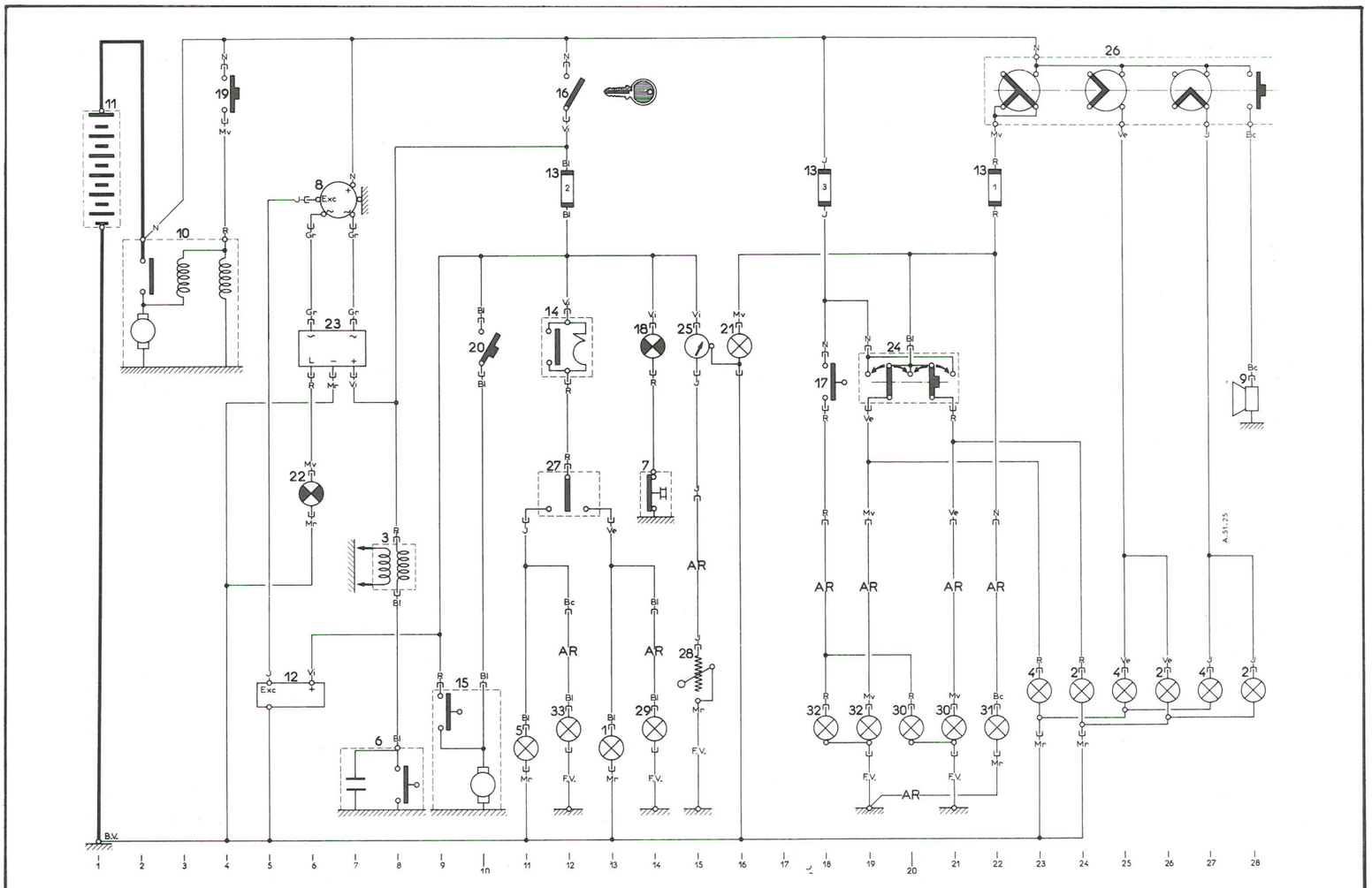

IDENTIFICATION OF PARTS

Ref.	Description and Position	Ref.	Description and Position
1	Direction indicator lamp, front, right-hand 13	16	Ignition switch 12
2	Headlamp right-hamd :	17	Stop switch 18
	- Main beam 28	18	Oil pressure warning lamp 14
	- Dipped lamp 26	19	Starter switch 4
	- Sidelamp 24	20	Windscreen wiper switch 10
3	Ignition coil 8	21	Dashboard lighting 16
4	Headlamp left-hand :	22	Ignition warning lamp 6
	- Main beam 27	23	Ignition warning lamp relay 6
	- Dipped beam 25	24	Parking lamp switch 20
	- Sidelamp 23	25	Petrol gauge 15
5	Direction indicator lamp, front, left-hand 11	26	Horn and lighting switch ..... 22 to 28
6	Distributor 8	27	Direction indicator inverser 12
7	Oil pressure switch 14	28	Gauge rheostat 15
8	Alternator 7	29	Direction indicator lamp, rear, right-hand 14
9	Horn 28	30	Tail-lamp right-hand 21
10	Starter 3		and Stop lamp 20
11	Battery 1	31	Number plate lamp 22
12	Voltage regulator ..... 5 - 6	32	Tail-lamp left-hand 19
13	Fuse box 12-18-22		and Stop lamp 18
14	Flasher unit 12	33	Direction indicator lamp, rear, left-hand 12
15	Windscreen wiper motor ..... 9 - 10		

TABLE OF BULBS

Description	Quantity	Base	Type	Voltage	Power	French standard ref.
Headlamps , Main and dipped beams	2	P. 45 t 41	selective yellow	24 V	55/ 50 W	R.136-15
Direction indicator lamps	4	BA. 15 s	Pear shaped	24 V	21 W	R.136-12
Sidelamps Number plate lamp	4	BA. 9 s	T 8/4	24 V	5 W	R.136-33
Tail lamps Brake lamps	2	BAY 15d/19	P 25/2	24 V	21/5 W	R.136-12
Dashboard lighting Oil pressure warning lamp	2	BA. 9 s	T 8/2	24 V	3 W	R.136-04

TABLE OF FUSES

Supply	Calibre	Colour	Units protected
« + » Battery	10 A	Yellow	Brake lamp contact maker Parking lights ⟶ Sidelamps and tail lamps switch
Ignition switch	10 A	Blue	Voltage regulator (+ terminal) Instrument panel (voltmeter petrol gauge) Switch ⟶ Windscreen wiper motor Oil pressure warning lamp Flasher unit ⟶ Direction indicators
Lighting switch (Mauve)	10 A	Red	Speedometer lamp Number plate lamp Parking lamp switch⟶ Sidelamps and tail lamps

WIRING DIAGRAM

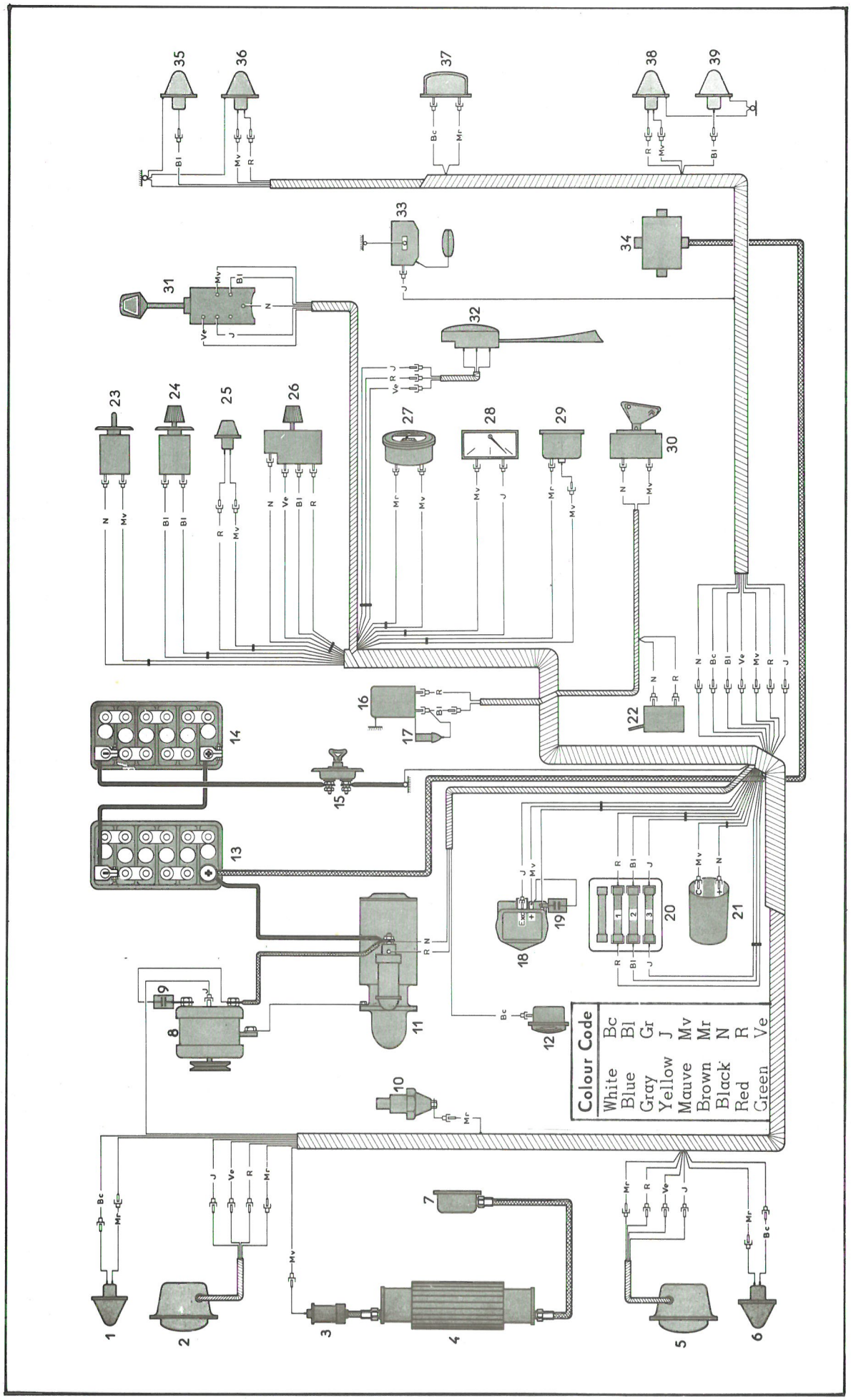

CIRCUIT DIAGRAM

P.T.O.

CIRCUIT DIAGRAM

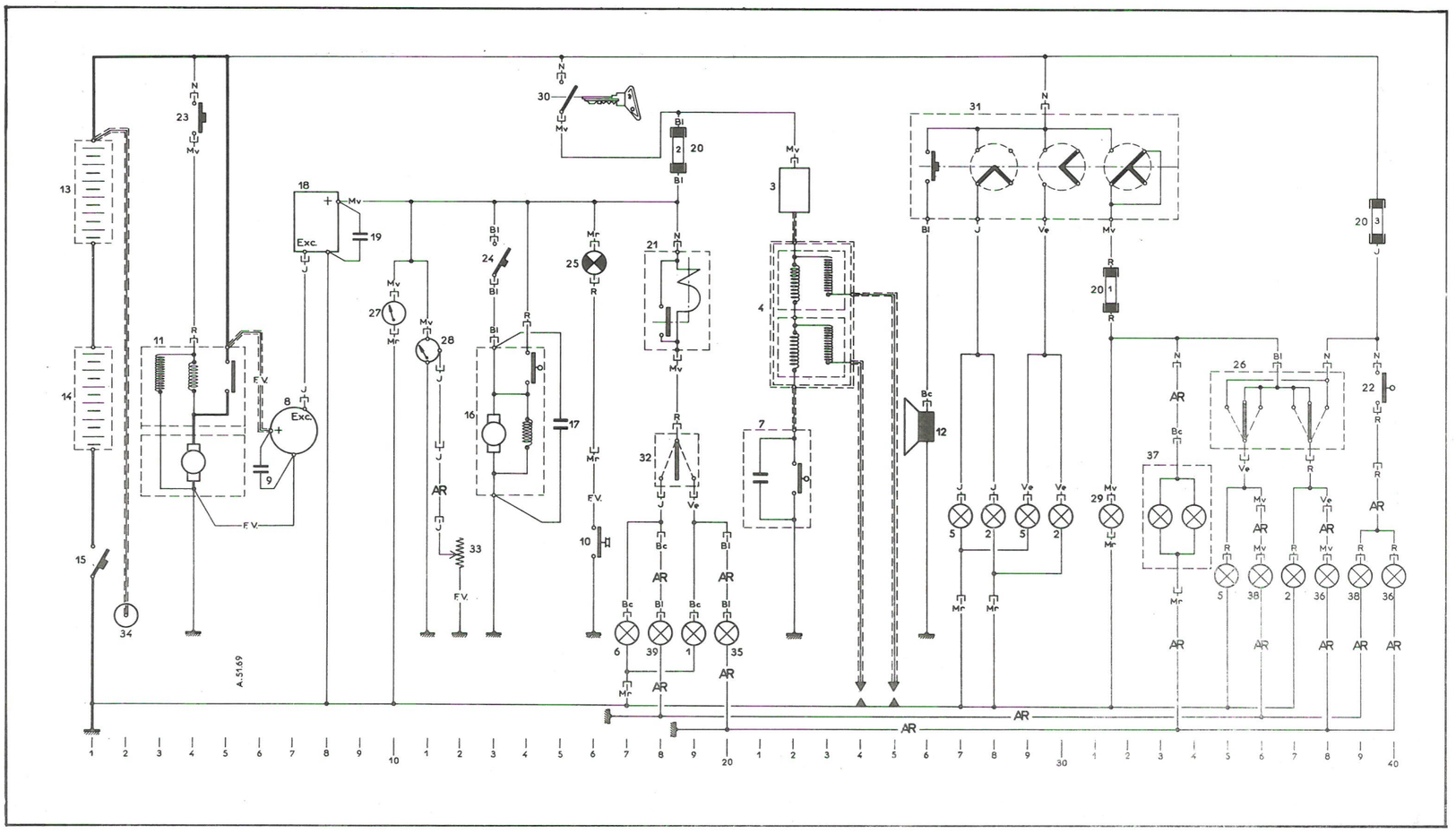

IDENTIFICATION OF PARTS

Ref.	Description	Position
1	Direction indicator lamp, front, right-hand	19
2	Headlamp right-hand	
	- Main beam	28
	- Dipped beam	30
	- Sidelamp	37
3	Primary coil filter	22
4	Ignition coils	23
5	Headlamp left-hand	
	- Main beam	27
	- Dipped beam	29
	- Sidelamp	35
6	Direction indicator lamp, front, left-hand	17
7	Distributor	22
8	Alternator	7
9	Spark capacitor	6
10	Oil pressure switch	16
11	Starter	4
12	Horn	26
13	12 V battery	1
14	12 V battery	1
15	Battery cut-out switch	1
16	Windscreen wiper motor	13
17	Spark capacitor	15

Ref.	Description	Position
18	Voltage regulator	8
19	Spark capacitor	9
20	Fuse box	19 - 31 - 40
21	Flasher unit	19
22	Stop switch	40
23	Starter switch	4
24	Windscreen wiper switch	13
25	Oil pressure warning lamp	16
26	Parking lamp switch	37
27	Thermal voltmeter	10
28	Petrol gauge	11
29	Speedometer lamp	31
30	Ignition switch	15
31	Lighting switch	27 to 33
32	Direction indicator switch	18
33	Petrol gauge rheostat	12
34	Junction box	2
35	Direction indicator lamp, rear, right-hand	20
36	Right-hand tail-lamp and stop lamp	38 - 40
37	Number plate lamp	33
38	Left-hand tail-lamp and stop lamp	36 - 39
39	Direction indicator lamp, rear, left-hand	18

IDENTIFICATION OF HARNESSES

Without mark : Front harness

Sheathed wiring ═══

F.V. Jumper lead

AR. Rear harness

Protected unit : framed in ─·─·─·─·─

TABLE OF BULBS

Description	Quantity	Base	Voltage	Power	French standard	International type
Main or dipped beams	2	P. 45 t 41	12 V	45/40 W	R. 136-15	
Front and rear direction indicators	4	BA 15 s/19	12 V	21 W	R. 136-12	P. 25/1
Front side lamps Number plate lamp	2 1	BA 9 s	12 V	4 W	R. 136-32	T. 8/4
Stop and tail lamps	2	BAY. 15 d/19	12 V	21/5 W	R. 136-12	P. 25/2
Dashboard lamp	1	BA. 9 s	12 V	2 W	R. 136-34	T. 8/2
Oil pressure warning lamp Hazard warning lamp	1 1	BA. 9 s	12 V	4 W	R. 136-33	T. 8/4
Voltmeter lighting	1	Wedge-base dia. 10	12 V	3 W		

TABLE OF FUSES

Supply	Calibre	Colour	Units protected
" + " battery (when switching on the ignition)	16 A	Blue	Voltage regulator Petrol gauge sender unit Thermal voltmeter Windscreen washer pump Windscreen wiper Oil pressure warning lamp Front and rear direction indicators *(without hazard warning device)*
" + " battery	10 A	Yellow	Stop lamps Front and rear hazard warning device Hazard warning lamp
Lighting switch	10 A	Green	Side and tail lamps, L.H. side *9/1976*
Lighting switch	10 A	Red	Speedometer lighting Voltmeter lighting Number plate lamp Side and tail lamps, R.H. side Side and tail lamps, L.H. side *9/1976*

A. 51.116

WIRING DIAGRAM

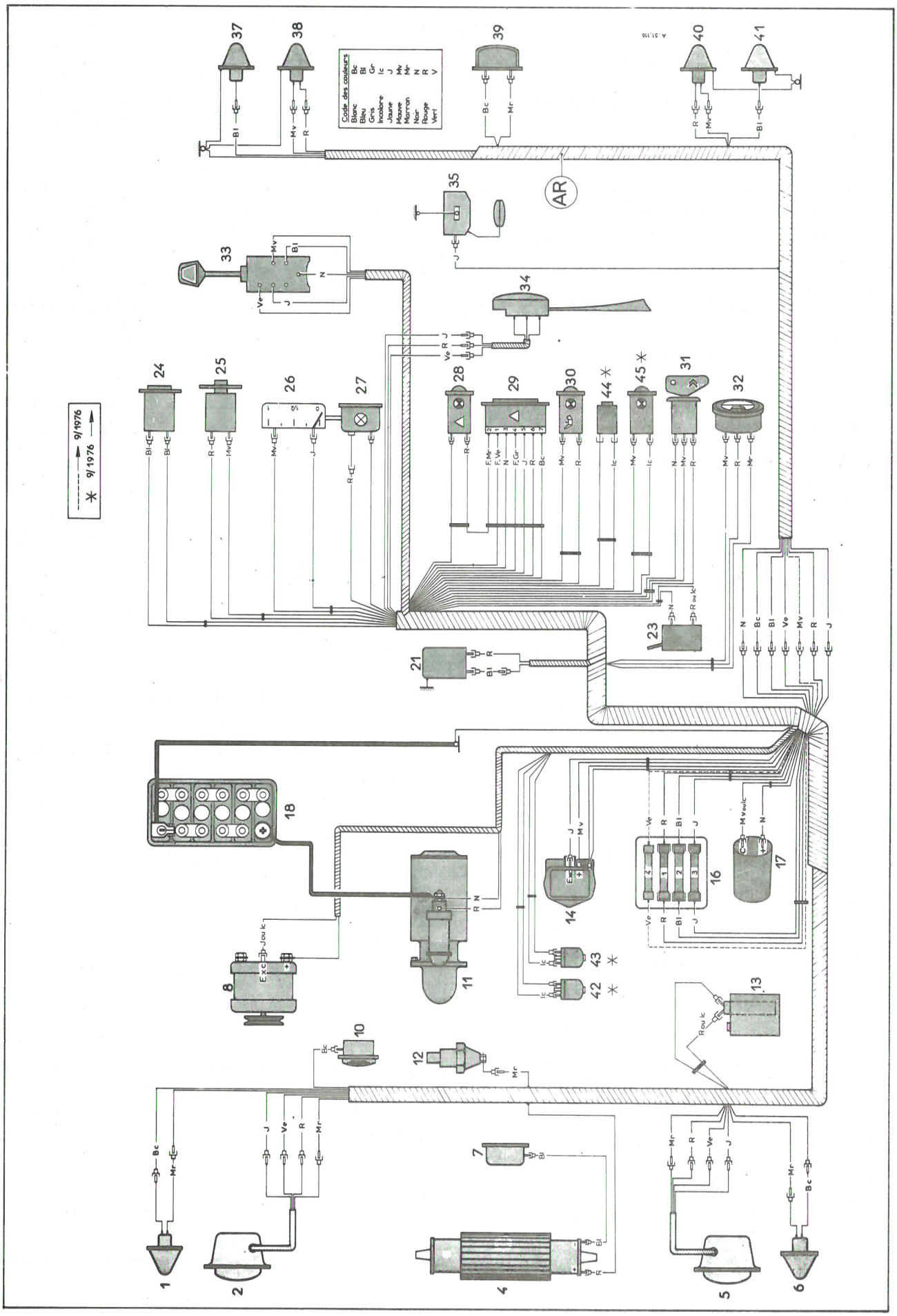

CIRCUIT DIAGRAM

P.T.O.

CIRCUIT DIAGRAM

A. 51-117 a

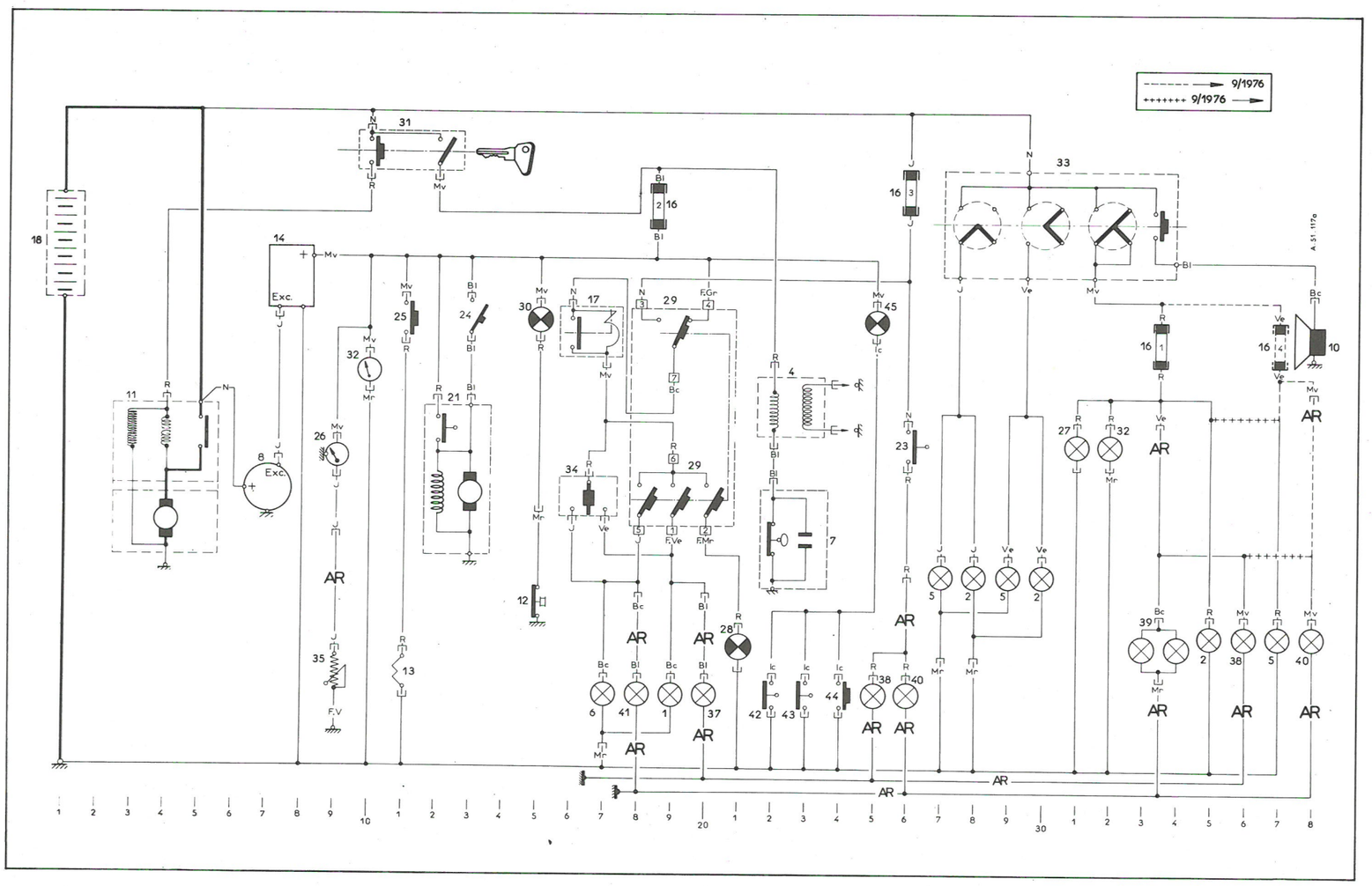

IDENTIFICATION OF PARTS

Ident. mark	Description and Position	Ident. mark	Description and Position
1	Front direction indicator, R.H. side 19	25	Windscreen washer control 11
2	Headlamp, R.H. side :	26	Petrol gauge sender unit 9
	– Main beam 28	27	Speedometer lighting 31
	– Dipped beam 30	28	Hazard warning lamp 21
	– Side lamp 35	29	Hazard warning switch ..... 18 to 20
4	Ignition coil 22-23	30	Oil pressure warning lamp 15
5	Headlamp, L.H. side :	31	Anti-theft ignition switch ..... 10 to 12
	– Main beam 27	32	Thermal voltmeter and lighting 10-32
	– Dipped beam 29	33	Lighting switch ..... 28 to 33
	– Side lamp 37	34	Direction indicator switch 16-17
6	Front direction indicator, L.H. side 17	35	Petrol gauge rheostat 9
7	Distributor 22-23	37	Rear direction indicator, R.H. side 20
8	Alternator 7	38	Stop and tail lamp, R.H. side :
10	Horn 38		– Stop lamp 25
11	Starter ..... 3 to 5		– Tail lamp 36
12	Engine oil pressure switch 15	39	Number plate lamp 33-34
13	Windscreen washer pump 11	40	Stop and tail lamp, L.H. side :
14	Voltage regulator 7-8		– Stop lamp 26
16	Fuse box 19-26-34-37		– Tail lamp 38
17	Flasher unit 16-17	41	Rear direction indicator, L.H. side 18
18	Battery 1	42	Switch on reservoir for front brake fluid level 22
21	Windscreen wiper motor 12-13	43	Switch on reservoir for rear brake fluid level 23
23	Stop lamp switch 26	44	Test-button for Nivocode warning lamp 24
24	Windscreen wiper switch 13	45	Nivocode warning lamp 25

IDENTIFICATION OF HARNESSES

Without identification mark	Front harness	**F.V.**	Flying lead
AR	Rear harness		

TABLE OF BULBS

Description	Quantity	Base	Voltage	Power	French standard	International type
Main or dipped beams	2	P. 45 t 41	12 V	45/40 W	R. 136-15	
Front and rear direction indicators	4	BA. 15 s/19	12 V	21 W	R. 136-12	P. 25/1
Front side lamps Number plate lamp	2 1	BA. 9 s	12 V	4 W	R. 136-32	T. 8/4
Stop and tail lamps	2	BAY. 15 d/19	12 V	21/5 W	R. 136-12	P. 25/2
Dashboard lighting and warning lamps	5	Wedge base dia. 5	12 V	1.2 W		
Switches on warning lamps (not removable)	2	"Luciole" type	12 V	1 W		

TABLE OF FUSES

Supply	Calibre	Colour	Units protected
" + " battery (when switching on the ignition)	16 A	Blue	Voltage regulator Petrol gauge sender unit Battery charge warning lamp Windscreen washer pump Windscreen wiper Oil pressure warning lamp Brake fluid level warning lamp
" + " battery	10 A	Yellow	Stop lamps Front and rear direction indicators Hazard warning device
Lighting switch	10 A	Red	Speedometer lighting Side lamp warning lamp Number plate lamp Side and tail lamps

WIRING DIAGRAM

A. 51-121

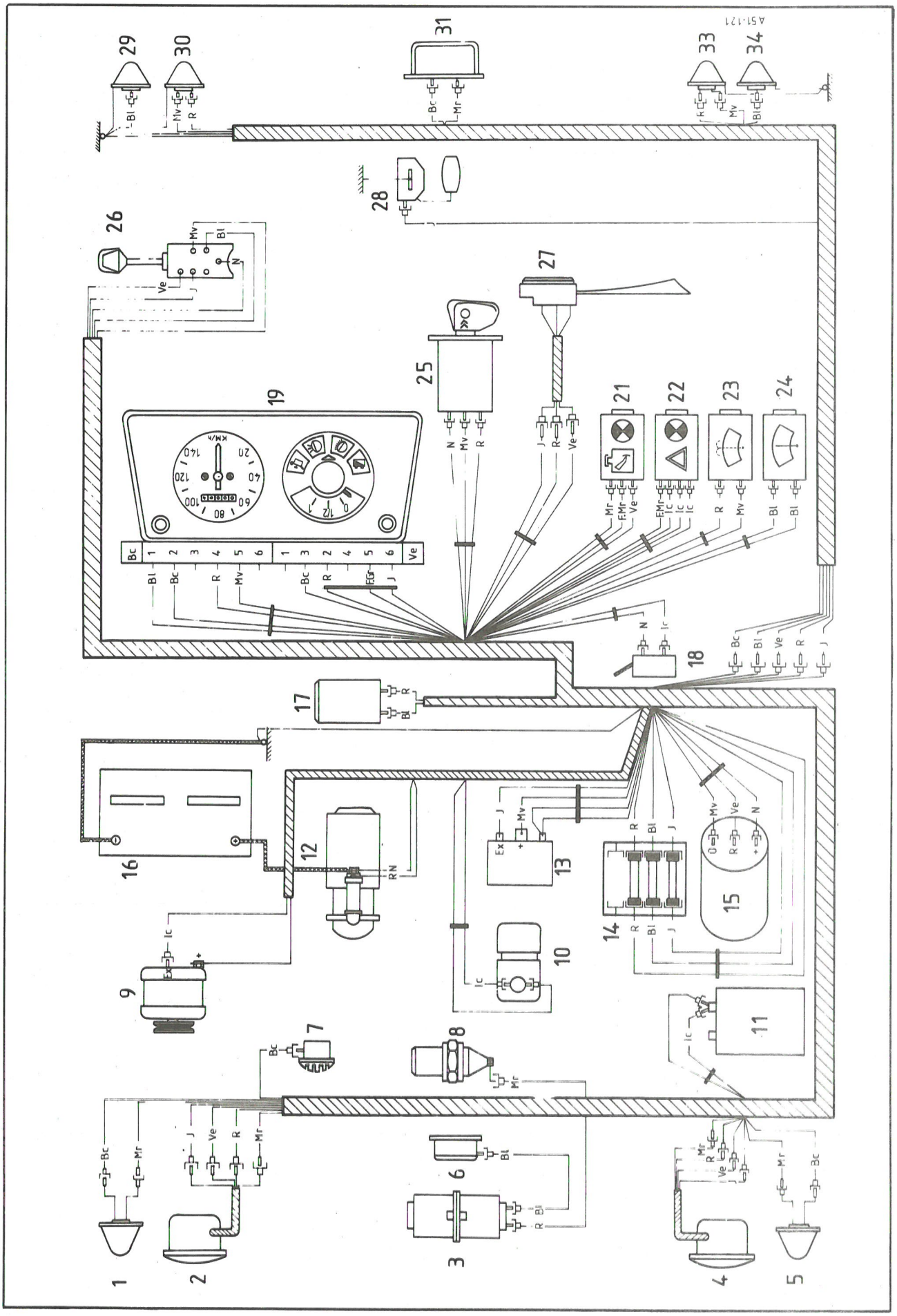

CIRCUIT DIAGRAM

P.T.O.

CIRCUIT DIAGRAM

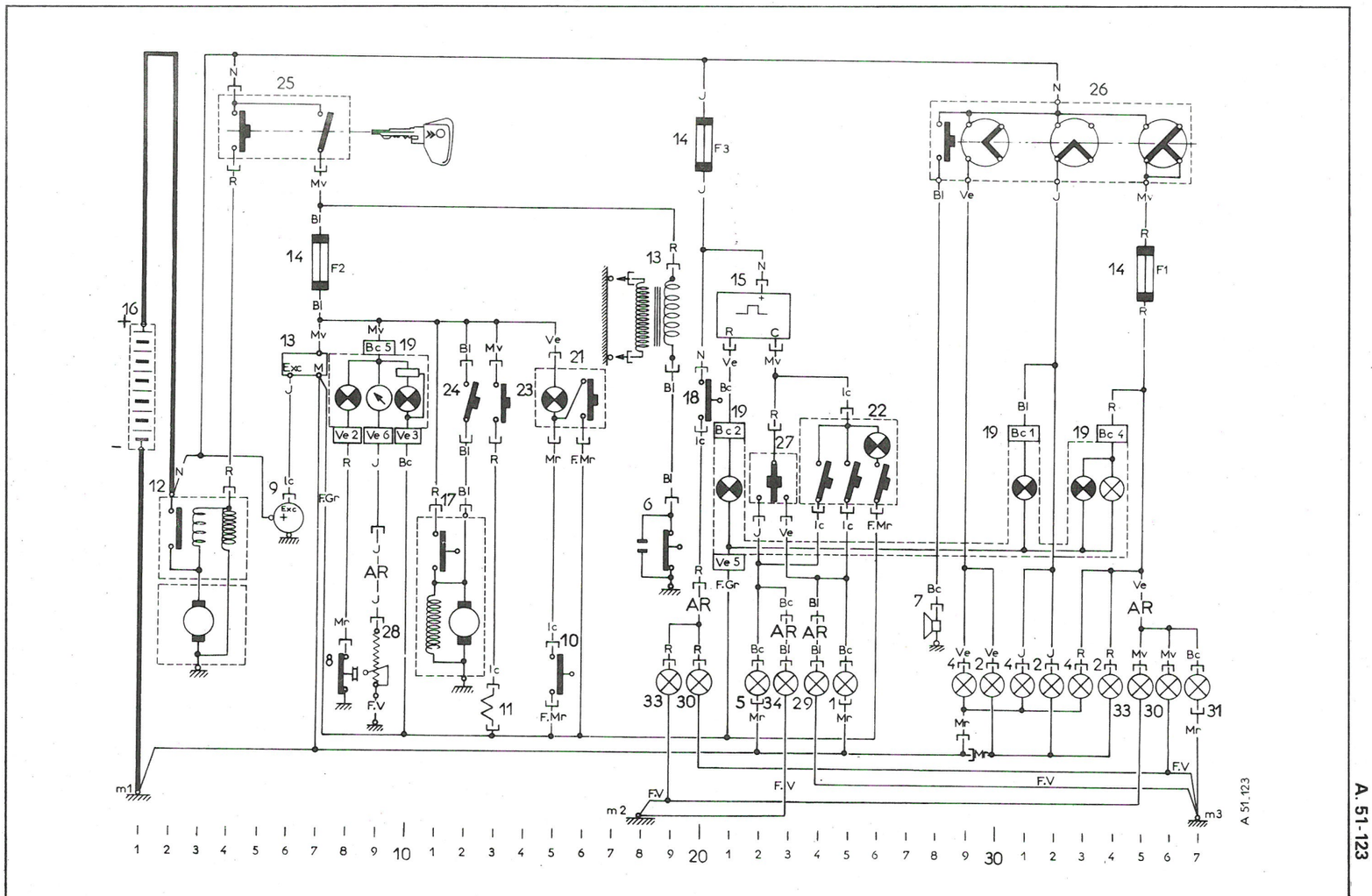

IDENTIFICATION OF PARTS

Ident. mark	Description and Position	Ident. mark	Description and Position
1	Front direction indicator, R.H. side 25	19	Dashboard :
2	Headlamp, R.H. side :		– Side lamp warning lamp 33
	– Main beam 32		– Oil pressure warning lamp 8
	– Dipped beam 30		– Petrol gauge sender unit 9
	– Side lamp 34		– Battery charge warning lamp 10
3	Ignition coil 18-19		– Direction indicator warning lamp 21
4	Headlamp, L.H. side :		– Main beam warning lamp 31
	– Main beam 31		– Dashboard lighting 34
	– Dipped beam 29	21	Nivocode warning lamp and test-button 15-16
	– Side lamp 33	22	Hazard warning switch and warning lamp ... 24 to 26
5	Front direction indicator, L.H. side 22	23	Windscreen washer control 13
6	Distributor 18-19	24	Windscreen wiper switch 12
7	Horn 28	25	Anti-theft ignition switch ..... 4 to 7
8	Engine oil pressure switch 8	26	Lighting and horn switch ..... 28 to 35
9	Alternator 6	27	Direction indicator switch ..... 22 to 23
10	Nicovode switch 15	28	Petrol gauge rheostat 9
11	Windscreen washer pump 13	29	Rear direction indicator, R.H. side 24
12	Starter ..... 2 to 4	30	Stop and tail lamp, R.H. side :
13	Voltage regulator 6-7		– Stop lamp 20
14	Fuse box 7-20-35		– Tail lamp 36
15	Flasher unit ..... 21 to 23	31	Number plate lamp 37
16	Battery 1	33	Stop and tail lamp, L.H. side :
17	Windscreen wiper motor 11-12		– Stop lamp 19
18	Stop switch 20		– Tail lamp 35
			Rear direction indicator, L.H. side 23

IDENTIFICATION OF EARTH POINTS

m1	Earth point on gearbox	**m3**	Rear earth point, R.H. side, on chassis
m2	Rear earth point, L.H. side, on chassis		

IDENTIFICATION OF HARNESSES

Without identification mark :	Front harness	**F.V.**	Flying lead
AR	Rear harness		

TABLE OF BULBS

Description	Quantity	Base	Voltage	Power	French standard	International type
Main or dipped beams	2	P.45 t.41	12 V	45/40 W	R. 136-15	
Front and rear direction indicators	4	BA. 15s/19	12 V	21 W	R. 136-12	P. 25/1
Front side lamps Number plate lamp	2 1	BA. 9 s	12 V	4 W	R. 136-32	T. 8/4
Stop and tail lamps	2	BAY. 15d/19	12 V	21/5 W	R. 136-12	P. 25/2
Choke indicator lamp Dashboard lighting and warning lamps	1 5	Wedge base dia. 5 mm	12 V	1.2 W		
Switches on warning lamps (not removable)	2	« Luciole » type	12 V	1 W		

TABLE OF FUSES

Supply	Calibre	Colour	Units protected
« + » battery (When switching on -the ignition)	16 A	Blue	Voltage regulator Petrol gauge sender unit Battery charge warning lamp Windscreen washer pump Windscreen wiper Oil pressure warning lamp Brake fluid level warning lamp Choke indicator lamp
« + » battery	10 A	Yellow	Stoplamps Front and rear direction indicators Hazard warning device
Lighting switch	10 A	Red	Speedometer lighting Sidelamp warning lamp Number plate lamp Side and tail lamps

WIRING DIAGRAM

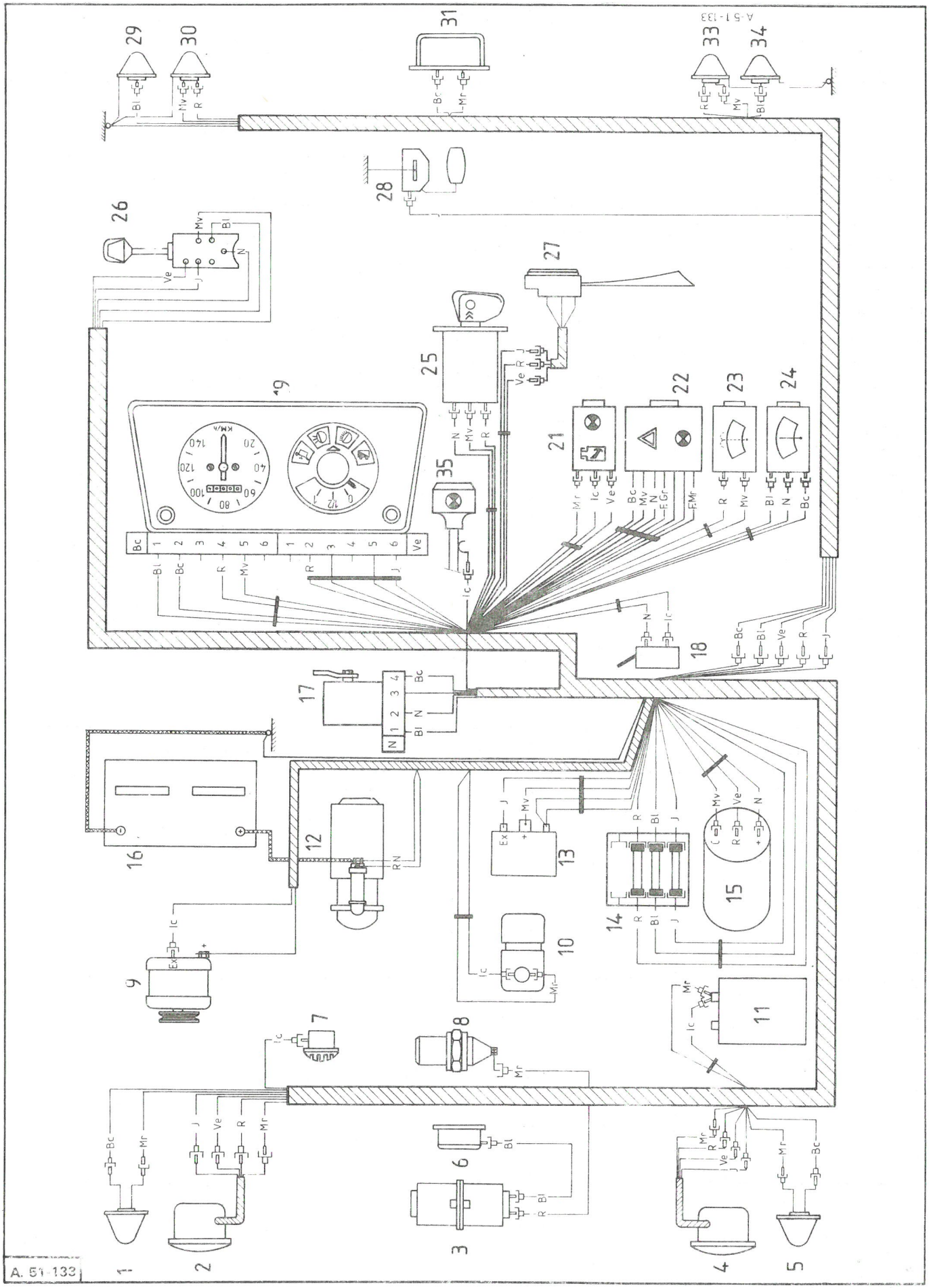

CIRCUIT DIAGRAM

P.T.O.

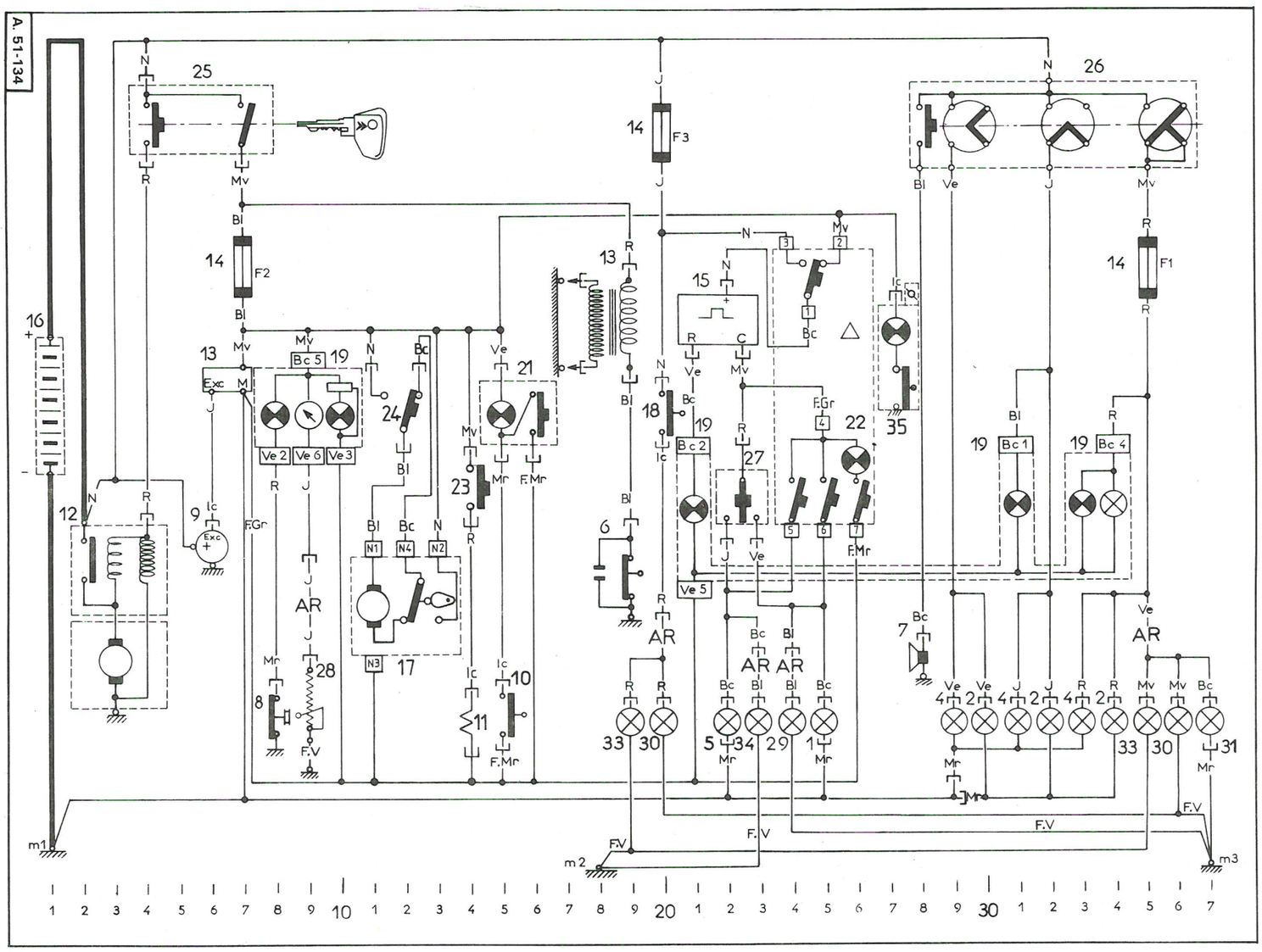

IDENTIFICATION OF PARTS

Ident. mark	Désignation and Position	Ident. mark	Description and Position
1	Front direction indicator, R.H. side 25		- Side lamp warning lamp 33
2	Headlamp, R.H. side :		- Oil pressure warning lamp 8
	- Main beam 32		- Petrol gauge sender unit 9
	- Dipped beam 30		- Battery charge warning lamp 10
	- Side lamp 34		- Direction indicator warning lamp 21
3	Ignition coil ..... 18 - 19		- Main beam warning lamp 31
4	Headlamp, L.H. side :		- Dashboard lighting 34
	- Main beam 31	21	Brake fluid level warning lamp and test-button ..... 15 - 16
	- Dipped beam 29	22	Hazard warning switch and warning lamp ..... 24 to 26
	- Side lamp 33	23	Windscreen washer control 13
5	Front direction indicator, L.H. side 22	24	Windscreen wiper switch 12
6	Distributor ..... 18 - 19	25	Anti-theft ignition switch ..... 4 to 7
7	Horn 28	26	Lighting and horn switch ..... 28 to 35
8	Engine oil pressure switch 8	27	Direction indicator switch ..... 22 to 23
9	Alternator 6	28	Petrol gauge rheostat 9
10	Brake fluid level switch 15	29	Rear direction indicator, R.H. side 24
11	Windscreen washer pump 13	30	Stop and tail lamp, R.H. side :
12	Starter ..... 2 to 4		- Stop lamp 20
13	Voltage regulator ..... 6 - 7		- Tail lamp 36
14	Fuse box ..... 7 - 20 - 35	31	Number plate lamp 37
15	Flasher unit ..... 21 to 23	33	Stop and tail lamp, L.H. side :
16	Battery 1		- Stop lamp 19
17	Windscreen wiper motor ..... 11 - 12		- Tail lamp 35
18	Stop switch 20	34	Rear direction indicator, L.H. side 23
19	Dashboard :	35	Choke indicator lamp 27

IDENTIFICATION OF EARTH POINTS

m1 m2	Earth point on gearbox Rear earth point, L.H. side, on chassis	m3	Rear earth point, R.H. side, on chassis

IDENTIFICATION OF HARNESSES

Without identification mark : **AR**	Front harness Rear harness	**FV**	Flying lead

REMOVING AND FITTING THE DYNAMO (6 volts)

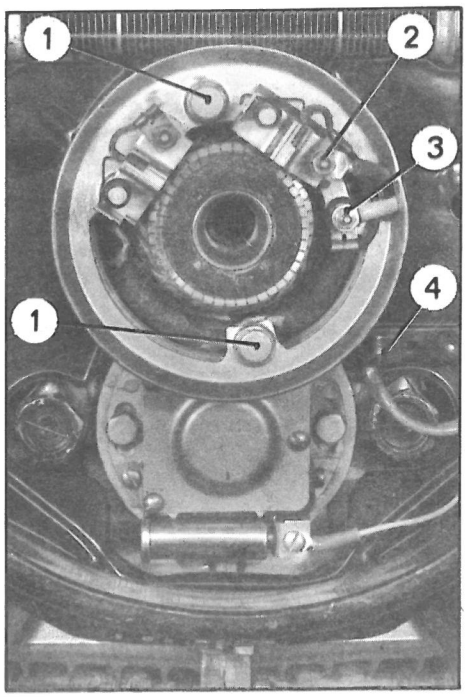

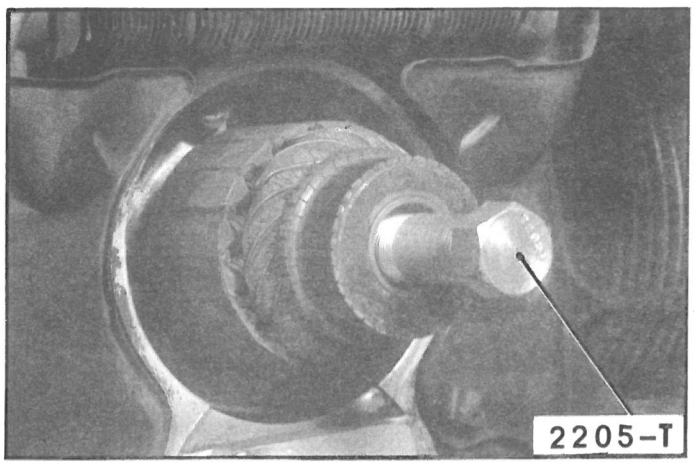

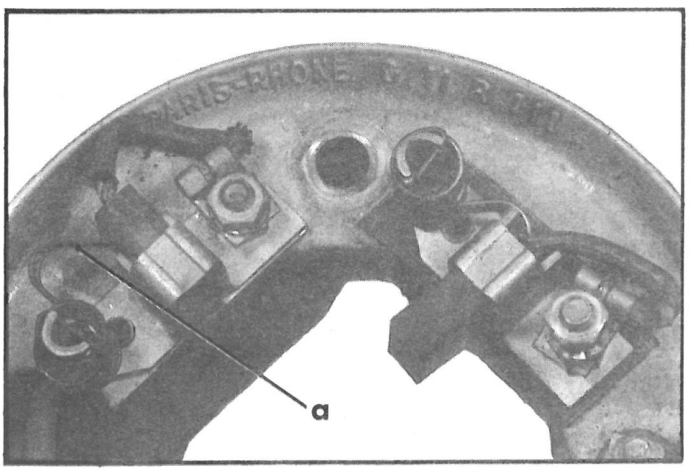

REMOVAL

1. Disconnect the negative lead from the battery (use the battery terminal extractor 2200-T, if necessary).
2. Remove the grilles (inner and outer) *(if need be).*
3. Remove the fan *(see relevant operation)*
4. Disconnect :
   - the charging lead (red) from the terminal (2),
   - the excitation lead (yellow) from the terminal (3).
5. Remove the two screws (1) securing the dynamo.
6. Disengage the dynamo body from the bore of the crankcase, without pulling on brush holder, in order not to disturb the leads.
7. Remove the armature from the crankshaft using extractor 2205-T.

FITTING

8. Remove the grease from the tappered bore in the armature and from the crankshaft journal. Ensure that the bore in which the dynamo is to be inserted in the crankcase is clean.
9. Set the armature on the crankshaft.
10. Hold the brushes in a raised position, using their springs, as shown at « a ».
11. Lightly grease the bore of the crankcase (TOTAL MULTIS).Insert body of dynamo in the bore of the engine crankcase. Insure that the insulators are in position on the two screws (1). Start these screws by hand, then tighten to between 5 to 8 mΛN (0.5 to 0.8 m.kg)

    NOTE : *Do not over-tighten in order to avoid risk of breaking the brush holder cover bosses.*
12. Bring the brushes into contact with the armature.
13. Connect the leads to the terminals (2) and (3). Fit a shakeproof washer and tighten the nuts. Check that the leads are firmly held by the lug (4) and pressed close to the front face of the crankcase and the dynamo body.
14. Fit the fan : *(see relevant operation).*
15. Fit the grilles (inner and outer) *(as applicable).*
16. Connect the negative lead to the battery.

OVERHAULING AN ALTERNATOR

MAKE	REFERENCE	VEHICLE	« Production » fitting dates. Notes
DUCELLIER	7522 B	AK	*3/1966 → 5/1968*
	7542 A	AYA 3 Dyane 6 AYM Méhari	*1/1968 → 9/1968* *8/1968 → 7/1969*
	Same as 7522 B, but also fitted with two alternative plug points for ignition warning lamp relay.		
	7542 G	AYA 3 Dyane 6	FR - 20 Heating
	Same as 7542 A but 320 W instead of 260 W		
	7534 A	AY Dyane 4 AYB Dyane 6 AK AYCA Méhari	*3/1968 → 2/1970* *9/1968 → 2/1970* *5/1968 → 7/1970* *7/1969 →*
	7532 A	AZA 2 (2 CV 4) AZKA (2 CV 6) AY Dyane AYCB Dyane 6 AK AZU	*2/1970 →* *2/1970 →* *2/1970 →* *2/1970 →* *7/1970 →* *7/1972 →*
	Same as 7534 A, but not fitted with alternative plug points		Power 400 W
PARIS - RHONE	A 11 M 4	AY Dyane 4 AYB Dyane 6 AYCA Méhari AK	*3/1968 → 2/1970* *9/1968 → 2/1970* *9/1969 → 9/1973* *5/1968 → 7/1970*
	A 11 M 6	AZA 2 (2 CV 4) AZKA (2 CV 6) AZU AY Dyane AYCB Dyane 6 AK	*2/1970 → 9/1973* *2/1970 → 9/1973* *7/1972 → 9/1973* *2/1970 → 9/1973* *2/1970 → 9/1973* *7/1970 → 9/1973*
	Same as A 11 M 4, but not fitted with alternative plug points		
	A 11 M 11	AYCA Mehari	*9/1973 →*
	A 11 M 12	AZA 2 (2 CV 4) AZKA (2 CV 6) AZU AY Dyane AYCB Dyane AK	*9/1973 →* *9/1973 →* *9/1973 →* *9/1973 →* *9/1973 →* *9/1973 →*
	Same as A 11 M 11, but not fitted with alternative plug points		
PARIS - RHONE (24 VOLTS)	A 11 M 9	AYCA Mehari	*→ 3/1974*
	A 11 M 13	**MILITARY TYPE**	*3/1974 →*

P.T.O.

OVERHAULING AN ALTERNATOR

STRIPPING.

1. Remove the pulley. Hold the pulley in a vice, by means of an old belt. *Never tighten it directly in jaws of vice, even if the latter is equipped with grippers.* Unscrew the nut and remove the pulley, noting the position of the washers and distance piece. Remove the key.
2. Remove the tie-rods and disconnect the rear bearing and the stator from the rotor, and the front bearing assembly, after noting the position of the various units in relation to each other. Disconnect the stator coil from the rear diode holder bearing.
3. Strip the rear bearing : terminals, fuses, brushes, brush holders.
   Do not attempt to extract diodes in order to renew them.
4. Clean carefully all parts except the factory lubricated bearings.

CHECKING.

5. Check the fuses *(ohmmeter or warning lamp).*
6. Check each diode *(warning lamp and 12 volt battery or ohmmeter).*
   Forward direction : *(warning lamp)* « + » terminal on the bearing (earth), « - » terminal on diode connecting lead « a », **lamp should light.**
   Reverse direction : *(warning lamp)* « - » terminal on the bearing (earth), « + » terminal on diode connector wire « a » : **the lamp should remain unlit.**
   The diode is cut off : the light remains unlit, and the ohmmeter shows ∞ in both directions.
   The diode is short-circuited : the warning lamp lights in both directions : ohmmeter reading is zero in both directions.
   In both cases, the diode support bearing or diode support must be renewed, according to the type of alternator.
7. Check the resistance of the coils *(ohmmeter)* :
   Rotor : approx. 7 Ω - Stator : approx. 0.3 Ω.
8. Check the insulation of the rotor and stator (use a 110 or 220 volt line-tester)
   Rotor : place one « feeler » on a rotor ring and another to the earth (rotorshaft) : **the lamp should not light.**
   Stator : place one « feeler » on a lead of the winding and another to the earth (casing) : **the lamp should not light.**
9. Insure that the rotor rings are in good condition. They should be smooth and with no trace of grease. Clean them with a cloth soaked in trichlorethylene, then polish with N° 600 fine abrasive paper.
10. Check the length of brushes. Ensure that they slide correctly in the brush holder.

ASSEMBLY.

11. Assemble the rear bearing : terminals, fuses.
12. Grease the bearings (if necessary).
13. Connect the stator coil leads to the rear bearing.
14. Connect the rotor and front bearing. Fit the stator and the rear bearing, respecting the positioning of the parts noted on stripping. Tighten the tie-rod nuts to 3 mW (0.3 m.kg). Fit them with LOCTITE GX. 01 459 01 A. Fit a shake proof washer.
15. Fit the pulley. Position the key, washers and distance piece in their correct locations.
    Hold the pulley, with a used belt, in vice as para. 1. Tighten the nut to 40 mW (4 m.kg).
16. Fit the brush-holder and brushes.

ALTERNATOR TYPE DUCELLIER 7542 A

2656

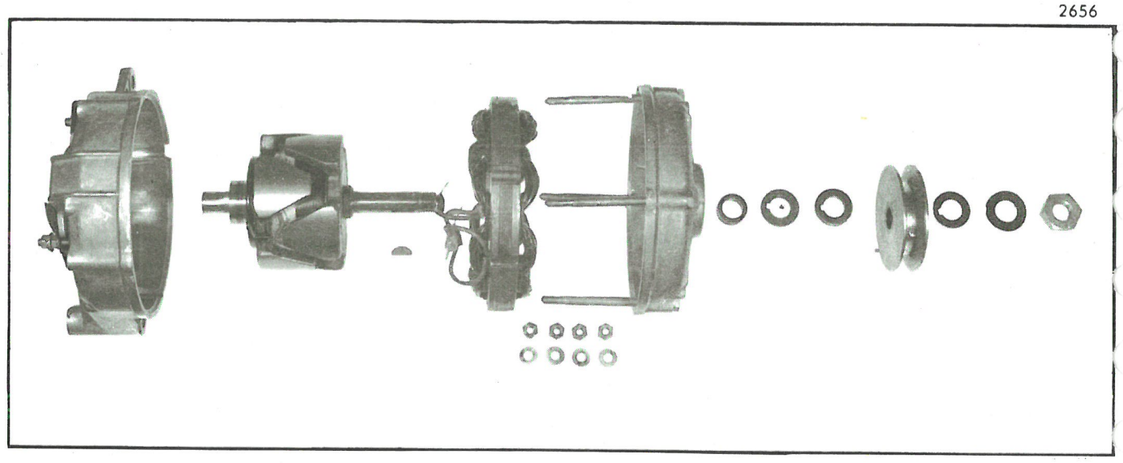

2652

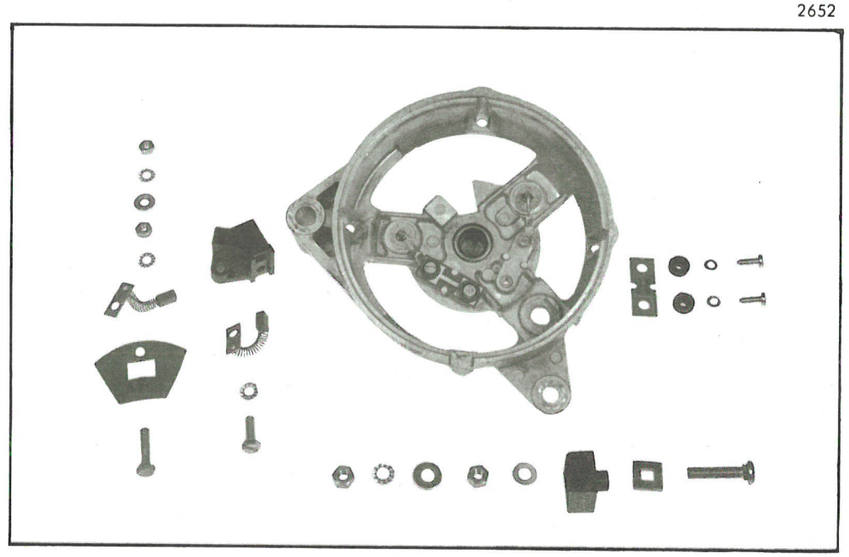

2455

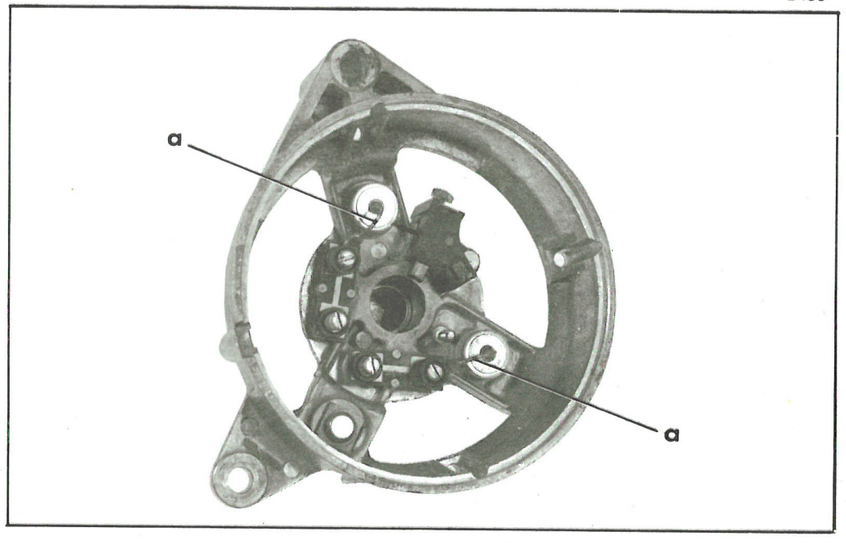

ALTERNATOR TYPE DUCELLIER 7532 or 7534

A. 53-32

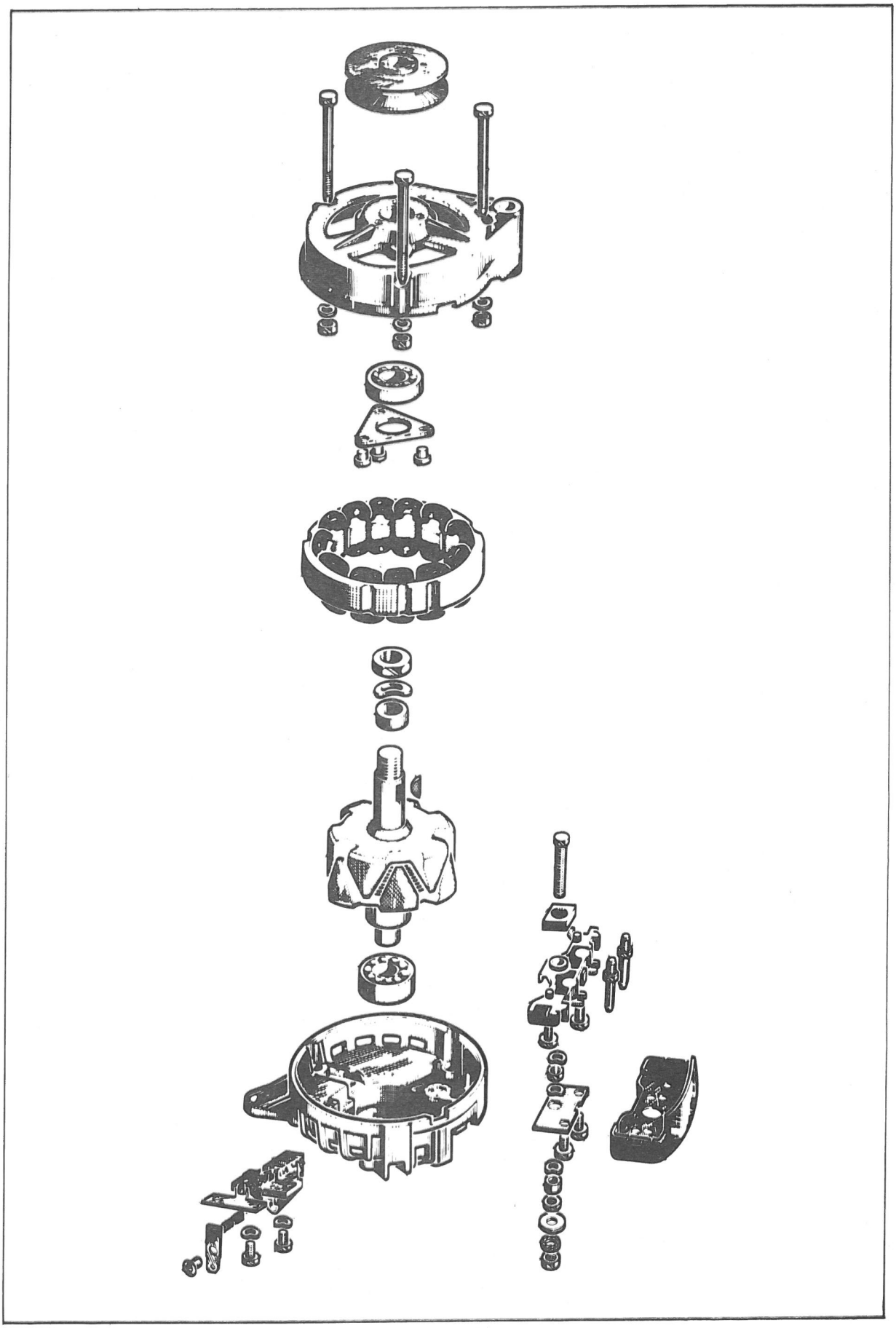

ALTERNATOR TYPE PARIS-RHONE A 11 - M 4

4400

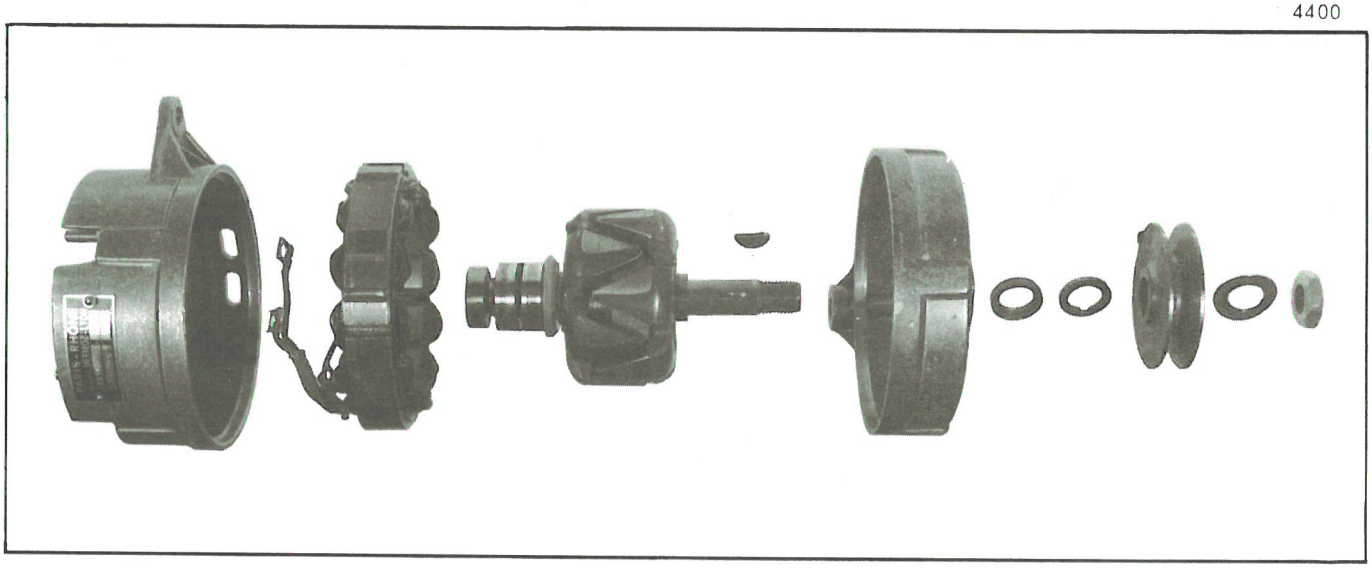

4399

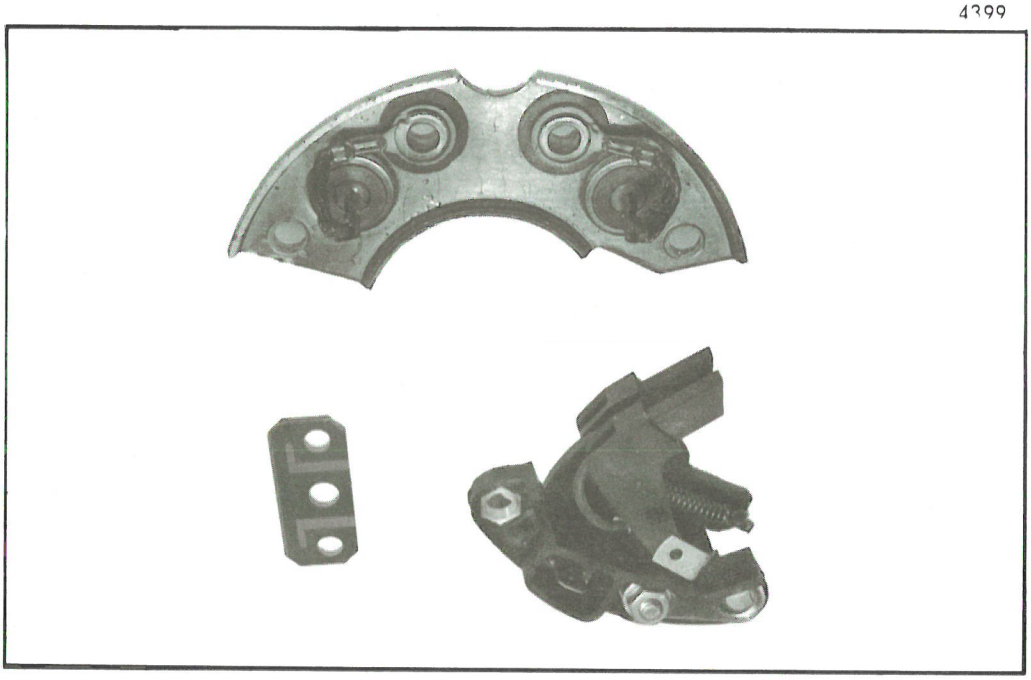

4499

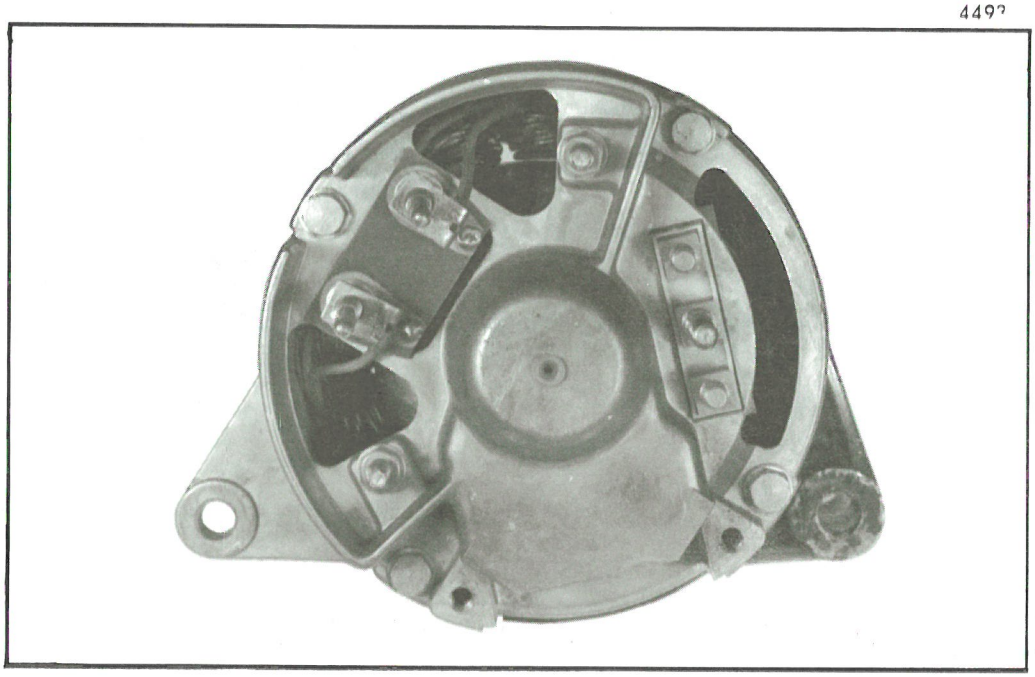

ALTERNATOR TYPE PARIS-RHONE A 11. M 11 or A 11. M 12

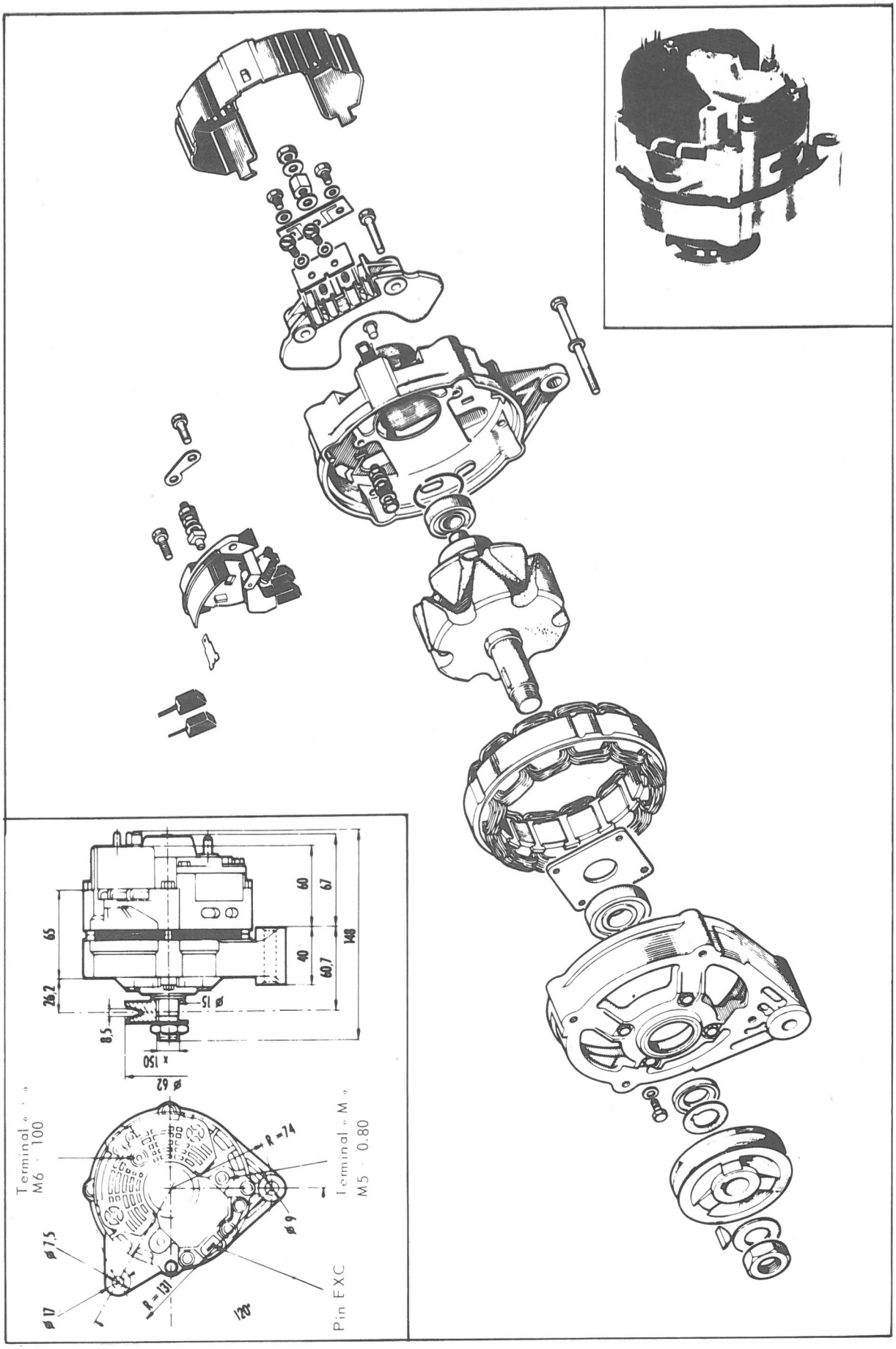

OVERHAULING A STARTER, DUCELLIER 6202 TYPE

5351

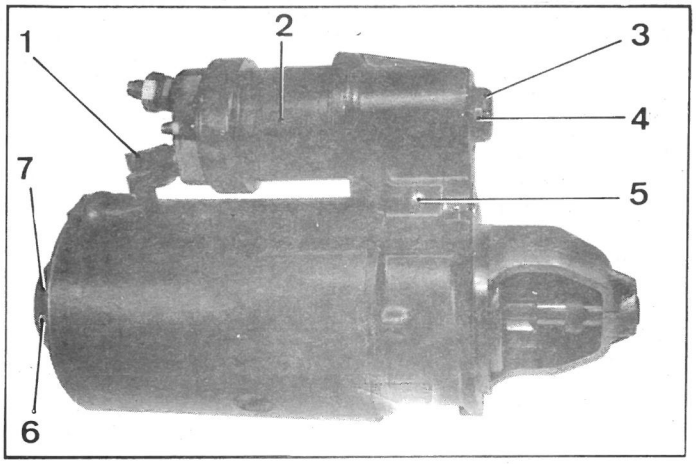

5347

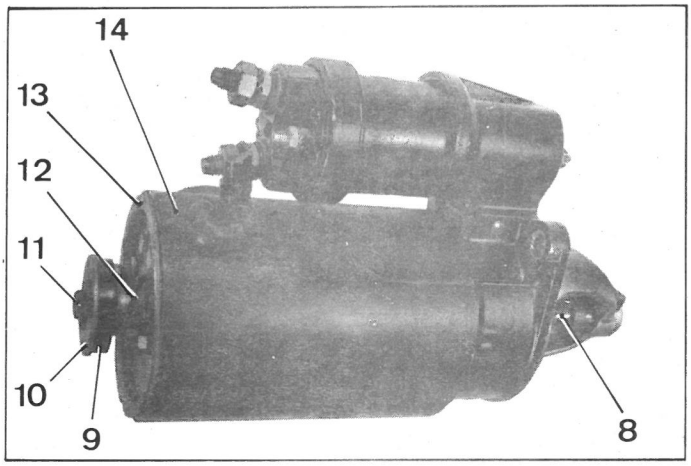

5344

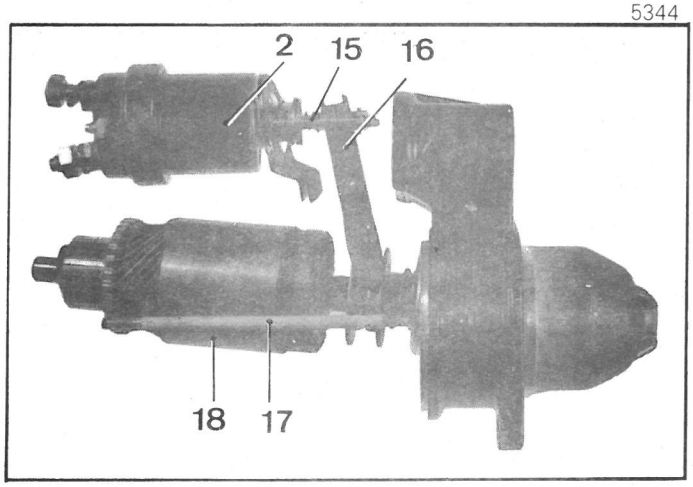

5341

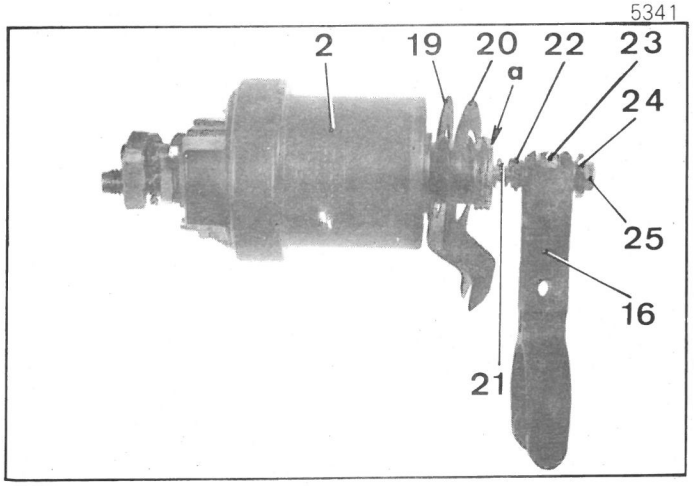

REMOVAL.

1. Disconnect the cable of the battery negative terminal.

2. Remove the starter.

3. Disconnect the lead (1) connecting the inductors.

4. Remove :

- the two bolts (6) securing rear bearing (13),
- the cover (7) of the rear bearing,
- the plastic plug (3).

5. Remove articulating pin (5) of the fork.

6. Maintain the driving pinion (8) using a screwdriver and loosen screw (11) (turning to the left). Remove tab washer (10).

7. Remove :

- friction washer (9),
- spring (12),
- rear bearing (13), by releasing the positive brush from its guide tube,
- the two nuts (4) holding solenoid (2).

8. Release housing (14) from the two coupling studs (17).

9. Remove :

- armature (18),
- solenoid (2) and fork (16).

10. Strip solenoid (2).

Remove :

- the two studs (15),
- screw (25) holding the solenoid core (2) using the two flats (a),
- insulating washer (22),
- "press-pahn" joint (20),
- deflector (19);
- adjustment screw (24),
- nut (23) of the fork.

5343

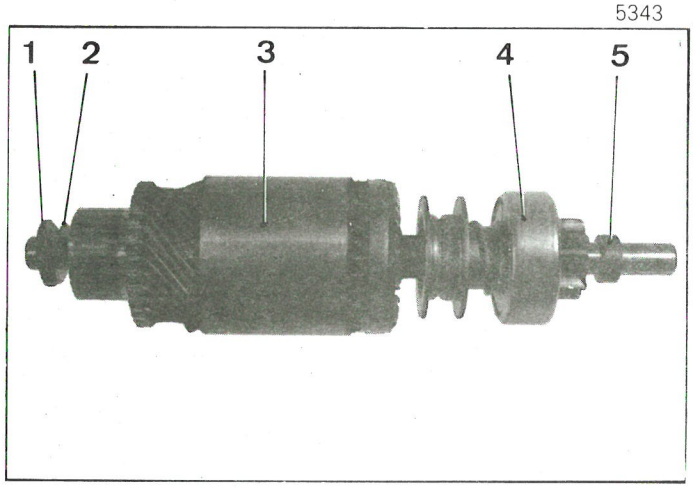

5345

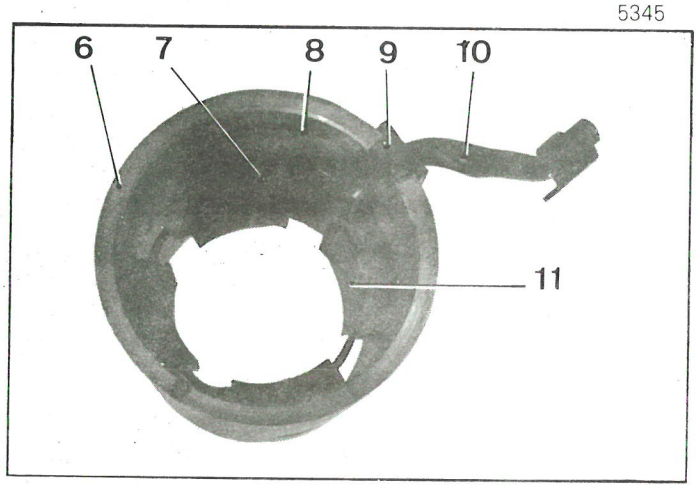

5346

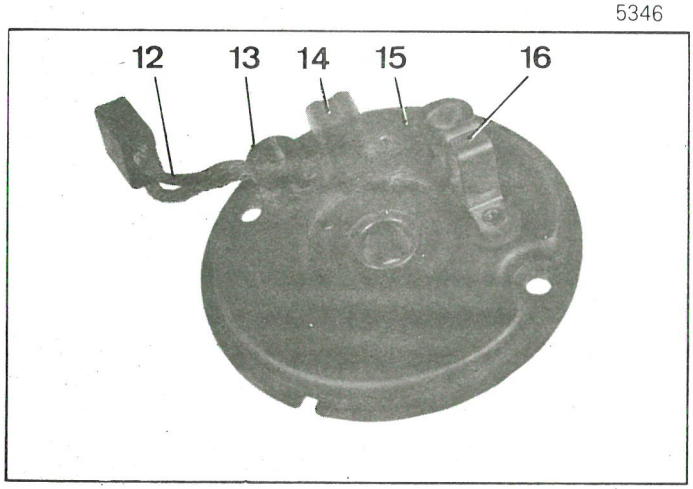

11. Strip armature (3).

Remove :
- celoron washer (1),
- steel washer (2).

Release thrust ring (5) towards the rear and remove :
- the spring,
- thrust ring (5),
- the driving pinion (4).

12. Strip frame (6).

Unweld :
- positive brush (7) (soldering iron),
- supply lead (10) of the inductors.

Remove guide (9).

Loosen the four screws securing the pole faces (11). Use a short screwdriver, holding it in place by means of a bench press.

Remove :
- the inductors,
- "press-pahn" joint (8).

13. Strip rear bearing (15).

Check the insulation of the positive brush-holder in relation to pole face (15) using a 110 or 220 volts indicator lamp.

If the indicator lamp lights up, the positive brush-holder (16) is not correctly insulated, and the rear bearing (15) should be replaced.

Unweld the negative brush (12) (soldering iron).

14. Clean the parts.

FITTING.

15. Check the armature shaft on two V-blocks or between centres. The maximum out-of-round tolerated is 0.15 mm.

16. Check the armature on a "growl" tester.

17. Rectify the commutator. Do not diminish the original diameter of 32 mm (1.25 in.) by more than 1 mm. Clean the commutator.

18. Check that the brushes are not worn and that they correctly slide. Replace them if the length is inferior to 8 mm (0.30 in.).

19. Check the winding of the solenoid using an ohmmeter connected between the terminal supplying the solenoid and the terminal supplying the inductors, marked "DEM". The resistance must be 0.5 Ω, if it is not, replace the solenoid.

5342

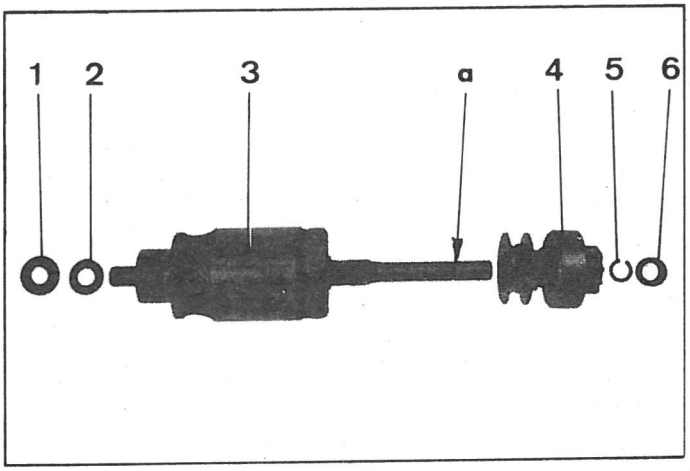

5343

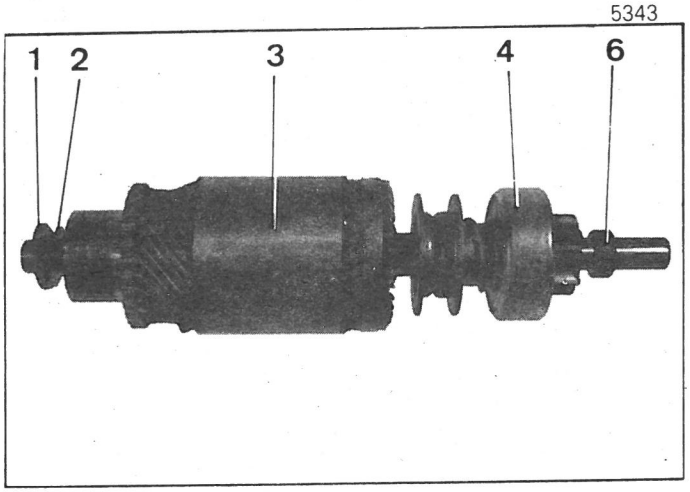

5340

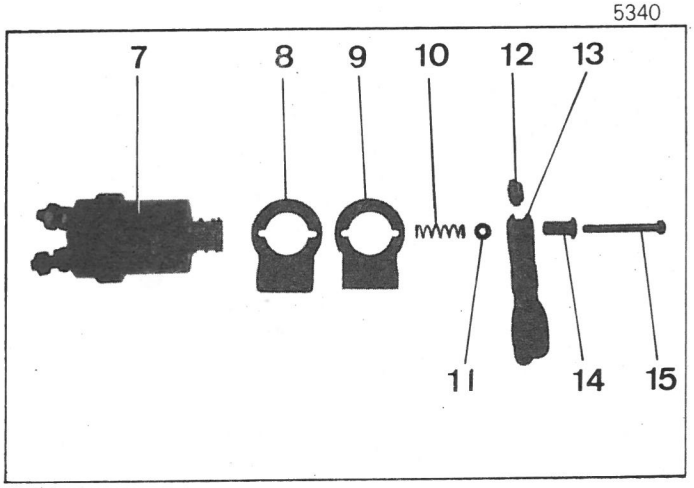

5341

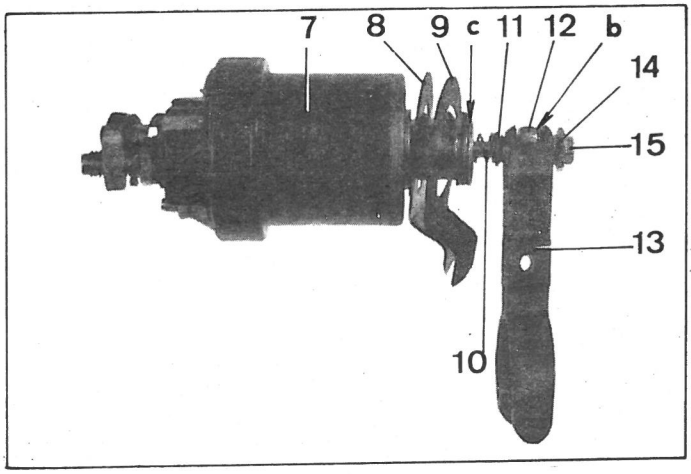

OPERATION No A. 533-3 : *Works on a starter.*

20. Prepare armature (3).

Position on the rear part of the armature shaft :

- steel washer (2),
- celoron washer (1),

previously oiled.

Oil the gutters (with very fluid oil) and position driving pinion (4).

Insert thrust ring (6) on the armature shaft and place spring (5) in groove (a).

Bring thrust ring (6) into contact with spring (5).

21. Prepare solenoid (7).

Fit :

- deflector (8),
- press-pahn joint (9), orientating them correctly,
- nut (12) in fork (13) orientating the face near slot (b) towards the front.

Tighten adjustment screw (14) in nut (12).
Engage screw (15) in adjustment screw (14) and fit :

- insulating washer (11),
- spring (10).

Then, screw the unit in the solenoid core (7). To do that, maintain solenoid core (7) by its two flats (a) and fully tighten screw (15), compressing return spring (10).

5345

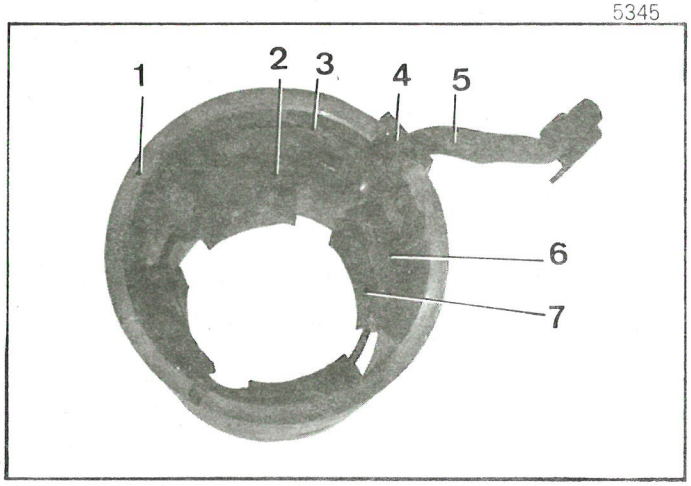

5346

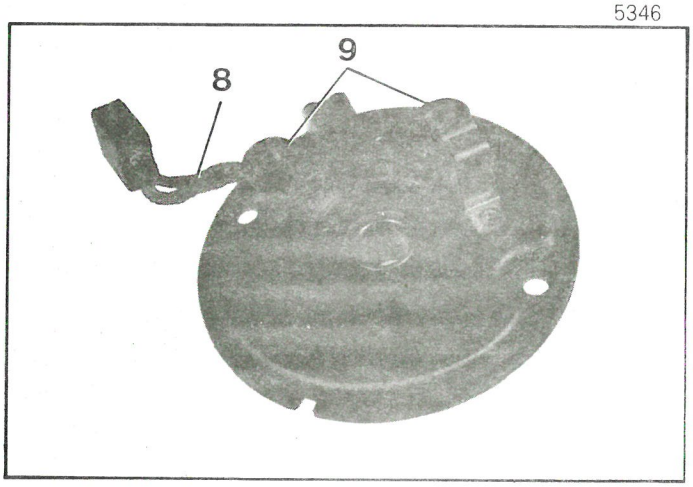

5344

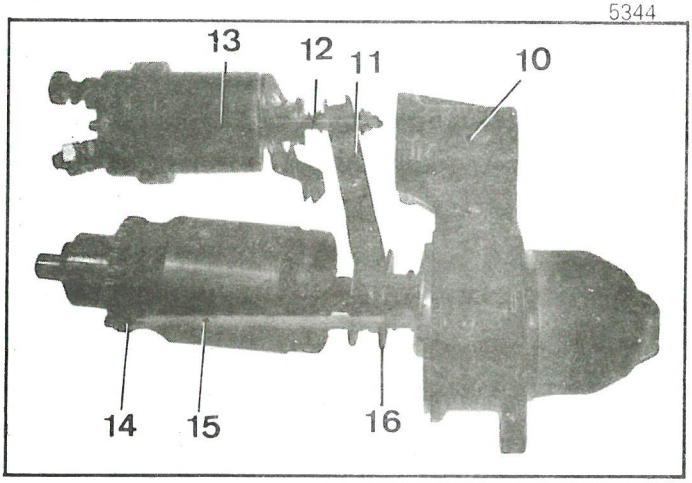

5347

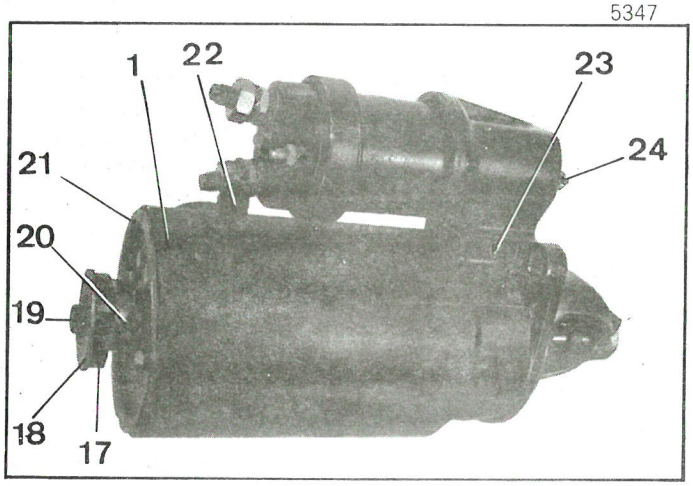

22. Prepare frame (1).

Place inductors (6) in frame (1) and fit pole faces (7). Maintain the pole faces using the four screws.
Place press-pahn joint (3) under two windings and at the connections of lead (5) supplying the inductors and positive wiper (2) so as to avoid a short-circuit.
Position the pole faces (7) longitudinally and block the retaining screws using a short screwdriver held in position with a bench press.
Fit rubber insulator (4) and lead (5).
Solder supply lead (5) and positive brush (2).

23. Prepare the rear bearing.

Solder negative brush (8).
Fit springs (9).

24. Screw the two studs (12) in solenoid (13) (the end with the shortest threads must be screwed in the solenoid).

25. Make sure that the coupling studs (14) are screwed fully in, and that the insulating sleeves (15) are correctly fitted. If necessary, soak them in hot water before fitting them on studs (14).

26. Position the armature in the starter nose (10).

27. Insert fork (11) in driving element (16) and insert both the solenoid (13) and the armature in starter nose (10).

28. Secure the solenoid by means of the two nuts (24) (spring washer).

29. Insert pin (23) in the articulating hole of fork (11) until both ends of the pin protrude from the two faces of the fork.

30. Insert frame (1) on the two coupling studs (14).

31. Bring rear bearing (21) on the armature shaft and fit positive brush (2) in its guide.
Insert the bearing until it comes in touch with frame (1).
Make sure that springs (9) are resting on the centre of negative brushes (8) and positive brushes (2).

32. Fit :
- spring (20),
- friction washer (17) previously oiled.

Push on friction washer (17) and compress spring (20). Tighten screw (19) (turning to the left), fitted with its tab washer (18).

33. Connect supply lead (22) of the inductors to terminal marked "DEM".

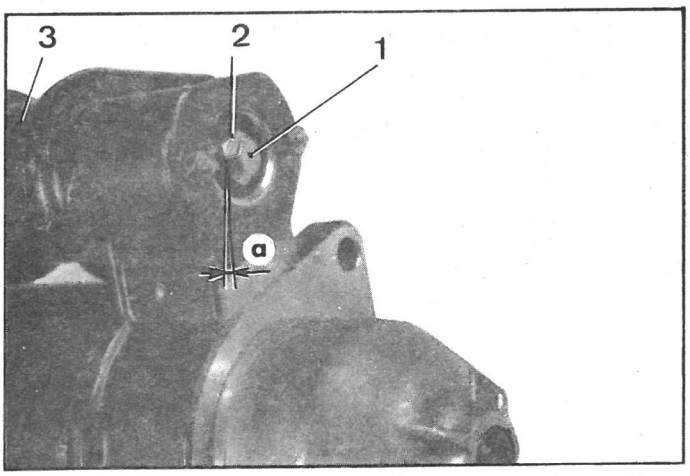

5351

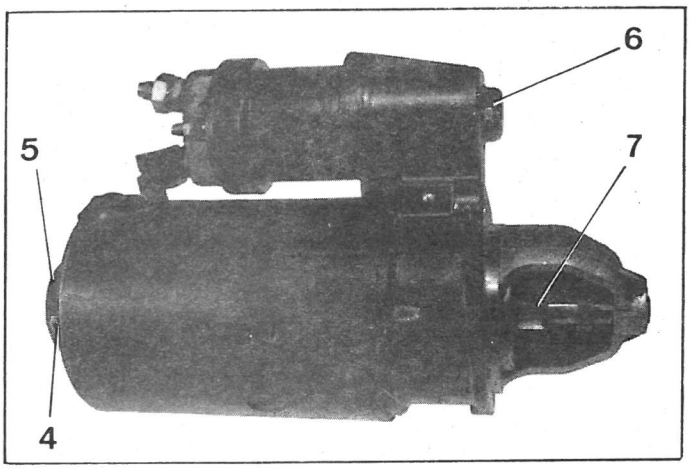

34. Fit cover (5).

35. Tighten the two nuts (4) (spring washer).

36. Adjust driving pinion (7).

Tighten adjustment screw (2) until free-play "a" comprised between adjustment screw (2) and retaining screw (1) is 0.5 mm max.

37. If necessary, modify the adjustment of the driving pinion (7).

38. Fit plastic plug (6) on the solenoïd.

39. Fit the starter on the car.

40. Connect the cable to the negative terminal of the battery.

OVERHAULING A STARTER, PARIS-RHONE D 8 E 99 or D 8 E 116

7226

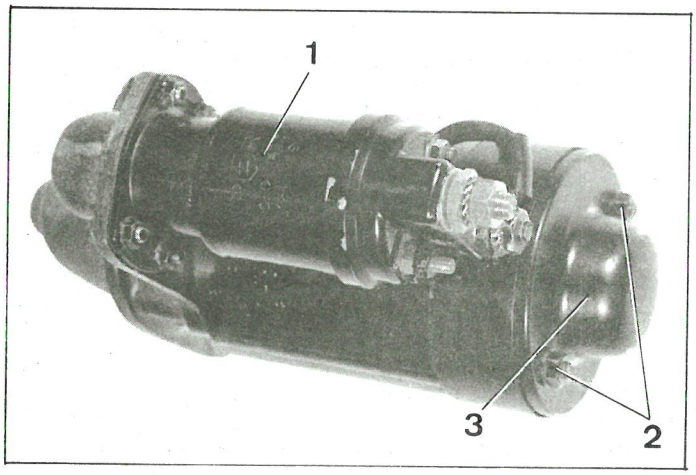

REMOVAL.

41. Disconnect the earth cable from the negative terminal of the battery.

42. Remove solenoid (1).

44. Remove :

- circle (4) and dust-seal (5) of inspection window (6) of the positive brush,
- the two nuts (2) securing the cover of the rear bearing,
- cover (3) of the rear bearing,
- spring (7) and articulating spindle (8) of the fork.

45. Maintain the driving pinion using a screwdriver. Remove screw (9) (turning to the left) and tab washer (10).

46. Remove :

- friction washer (11),
- spring (12),
- rear bearing (13) by releasing the positive brush from its bracket.

7169

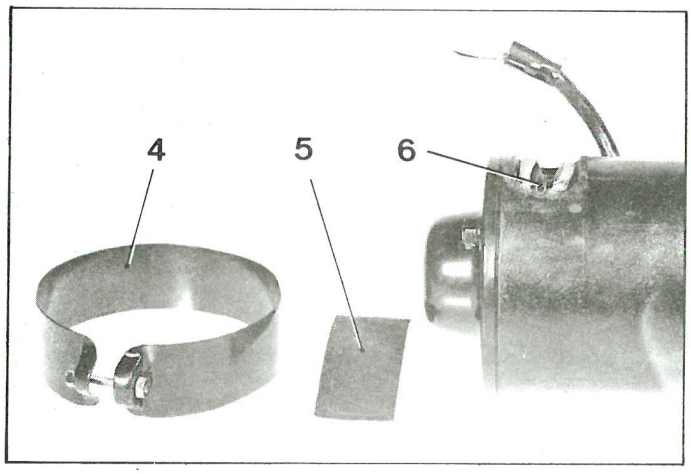

7168

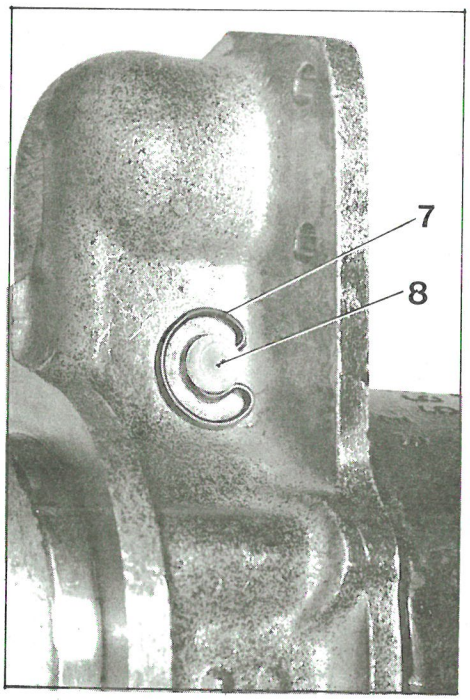

7170

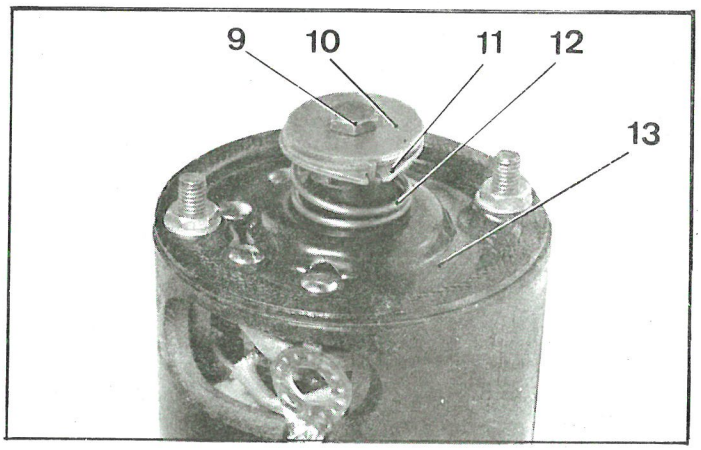

7171

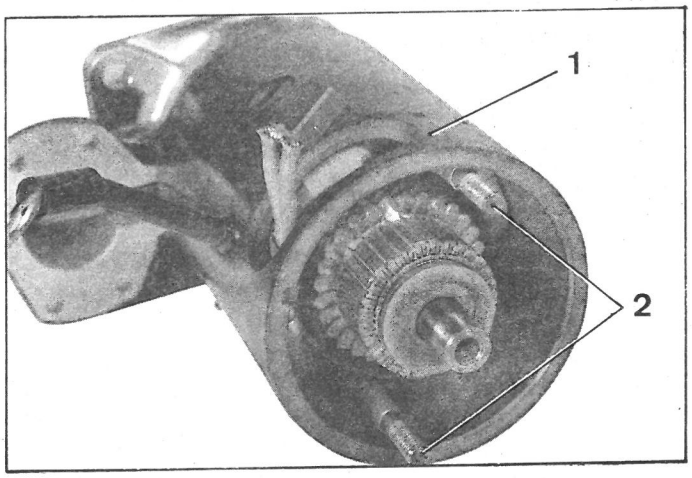

47. Release housing (1) from the two coupling studs (2).

48. Remove :

- armature (3),
- fork (4).

49. Strip armature (3) :

- celoron washer (5),
- steel washer (6).

Release thrust ring (8) towards the rear and remove :

- the spring,
- thrust ring (8),
- driving pinion (7).

50. Strip frame (9) :

Unweld supply lead of inductors (10).

Loosen the four securing screws of pole faces (11), using a short screwdriver held in position by means of a bench press.

Remove :

- the inductors,
- press-pahn joint (12),
- the rubber insulator.

Unweld positive brush (13).

7177

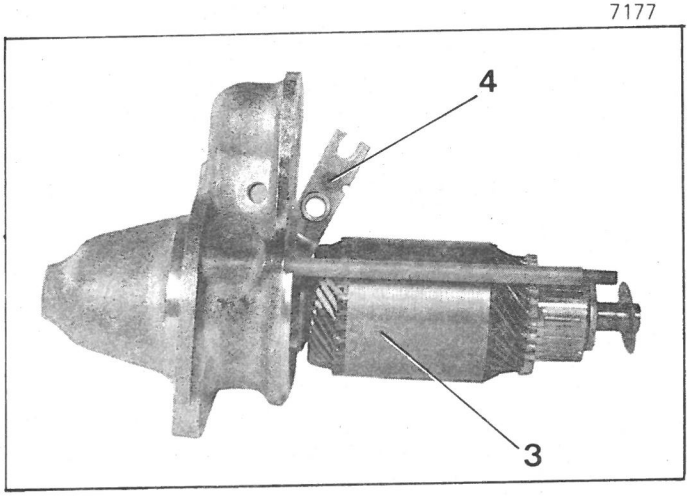

7174

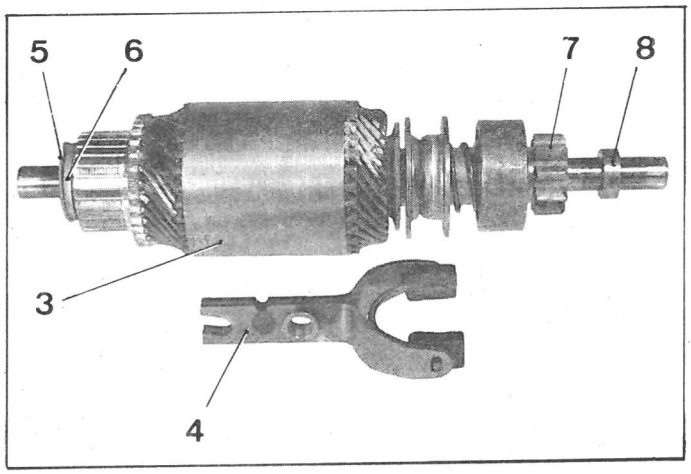

7172.

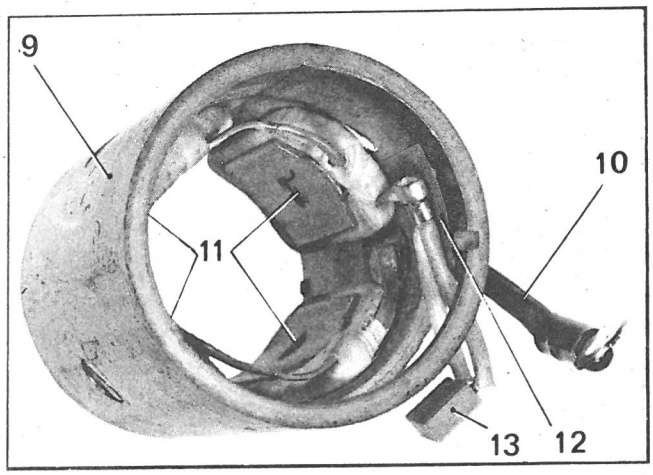

7173

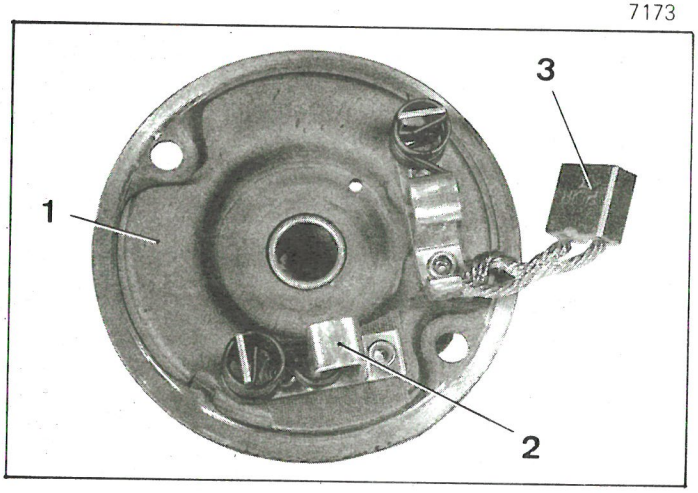

51. Strip rear bearing (1) :

Check the insulation of the positive brush-holder (2) in relation to pole face (1) using a 110 or 220 volts indicator lamp. If the lamp lights up, the positive brush-holder is not correctly insulated, and the rear bearing must be replaced.

Unweld negative brush (3) (soldering iron).

52. Clean the parts.

FITTING.

53. Check armature shaft (4) on two V-blocks or between centres.

The maximum out-of-round tolerated is 0.15 mm.

5342

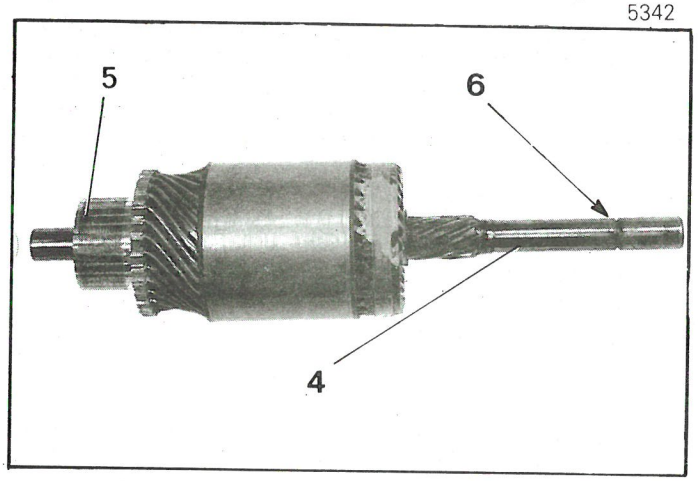

54. Check the armature on a "growl" tester.

55. Check the commutator. The maximum out-of-round tolerated is 0.07 mm. Check it, if necessary.

56. Rectifying the commutator :

Do not diminish the 36.5 mm. (1.43 in.) original diameter by more than 2 mm. Clean the commutator.

57. Check the wear of the brushes ; replace them when the length is inferior to 8 mm.

58. Check the resistance of the solenoid which must be 0.5 Ω approximately.

59. Check the solenoid contacts.

60. Prepare the armature :

Fit on the rear part of the armature shaft :

- steel washer (8),
- celoron washer (7),

both of them must be previously greased.

Oil the gutters (with very fluid oil) and fit driving pinion (9).

Insert thrust ring (11) on the armature shaft and fit stop spring (10) in groove (6).

Bring thrust ring (11) until it comes into contact with stop spring (10).

5342 (bis)

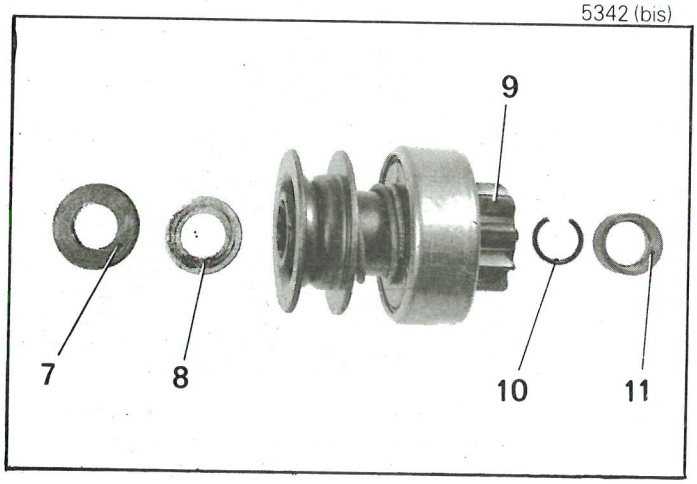

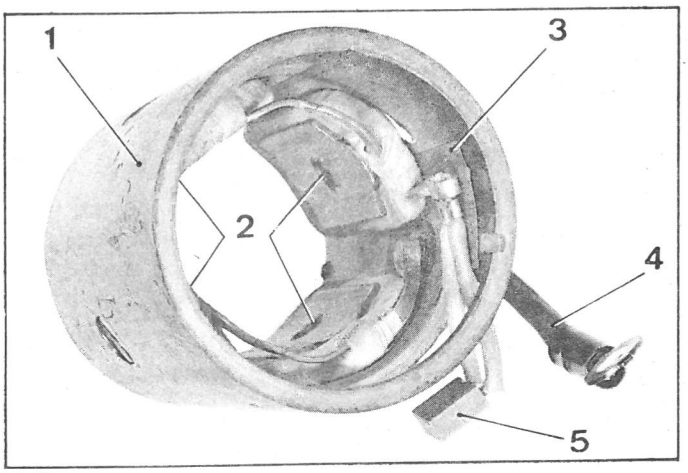

7172

61. Prepare frame (1) :

Fit the inductors in frame (1) and fit the pole faces. Hold the pole faces in position using the four screws (2).

Place press-pahn joint (3) under two windings and at the connections of lead (4) supplying the inductors and positive brush (5) so as to avoid a short-circuit.

Position the pole faces (7) longitudinally and block the retaining screws (2) using a short screwdriver held in position with a bench press.

Fit the rubber insulator and lead (4).

Solder supply lead (4) and leads of positive brush (5).

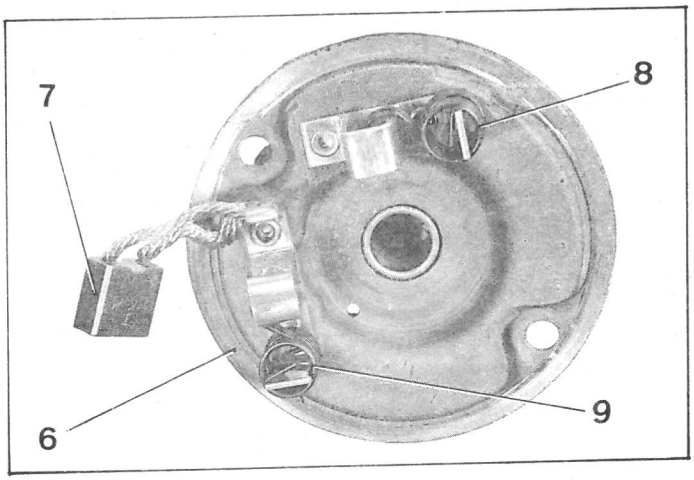

7173

62. Prepare rear bearing (6).

Solder the leads of negative brush (7).

Fit springs (8) and (9).

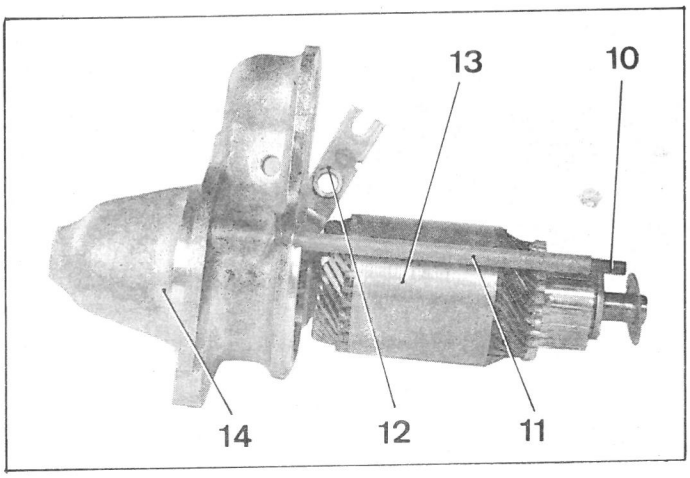

7177

63. Make sure that coupling studs (10) are screwed to the end, and that insulating sleeves (11) are correctly fitted.

If necessary, soak them in hot water before fitting them on studs (10).

64. Insert fork (12) in the driving element and insert armature (13) in starter nose (14).

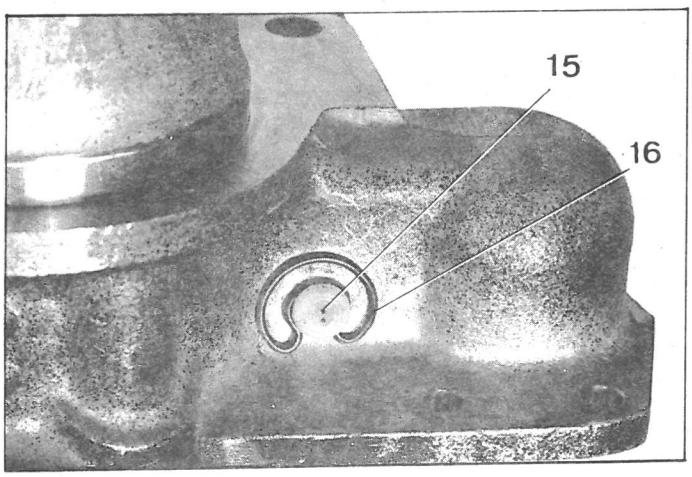

7168

65. Insert spindle (15) in the articulating hole of fork (12) and stop it using spring (16).

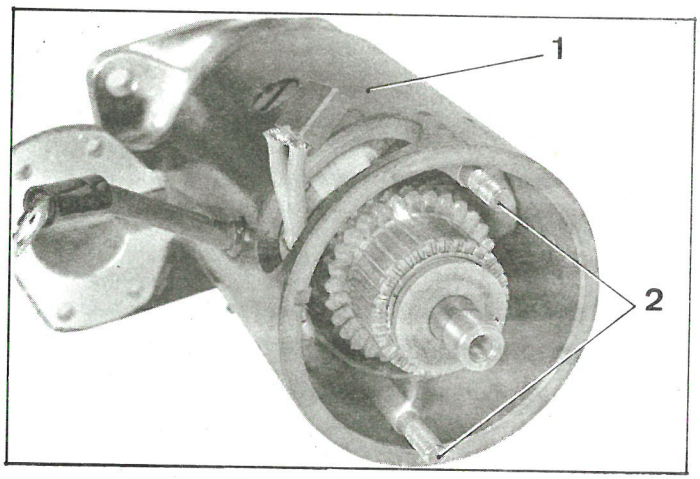

7171

66. Fit frame (1) on coupling studs (2).

67. Bring rear bearing (3) on the armature shaft and fit the positive brush in its guide.
Insert the bearing until it comes into contact with frame (1). Make sure that the springs rest on the centre of negative and positive brushes.

68. Fit :

- spring (4),
- friction washer (5) previously greased.

Push on friction washer (5) and compress spring (5).
Tighten screw (6) (turning to the left), fitted with its tab washer (7).

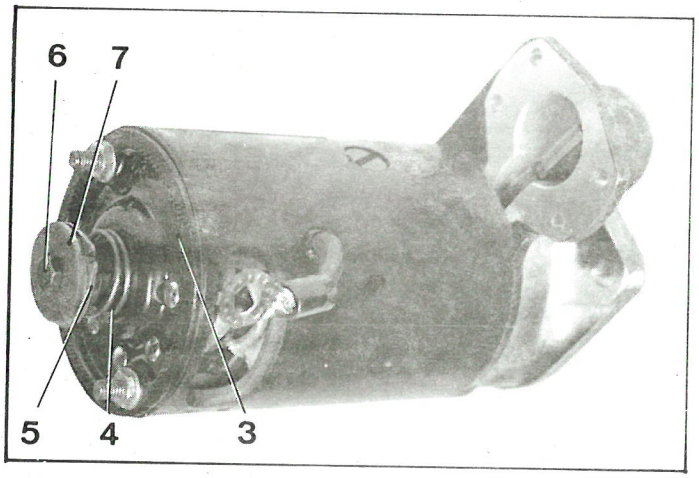

7170

69. Fit cover (12).

70. Fit paper gasket (9) and circle (10) of inspection window (11).

71. Tighten the two nuts (13) (spring washer).

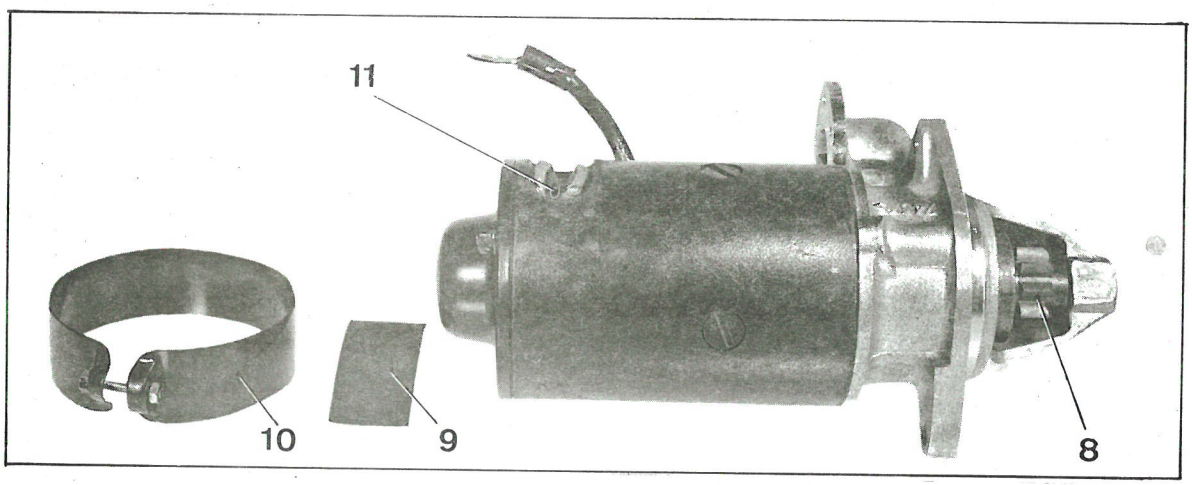

7169

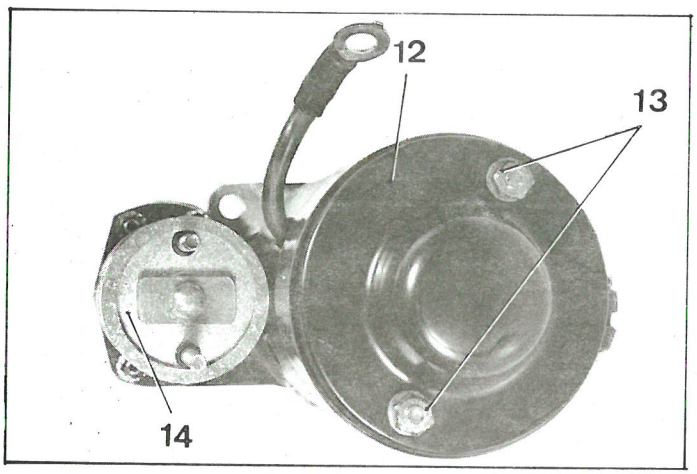

7165

72. Fit solenoid (14).

73. Adjust driving pinion (8).

74. Fit the rear cover of the solenoid.

75. Connect the supply lead of the inductors to the lower terminal of the solenoid.

76. Fit the starter on the vehicle.

77. Connect the earth cable to the negative terminal of the battery.

ADJUSTING THE HEADLAMPS.

4025

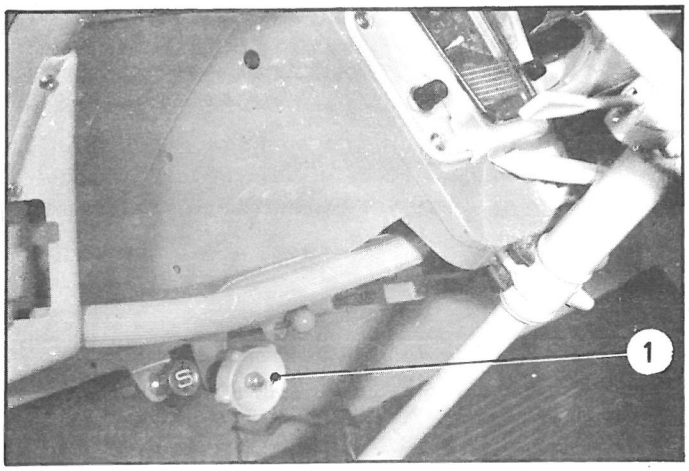

4405

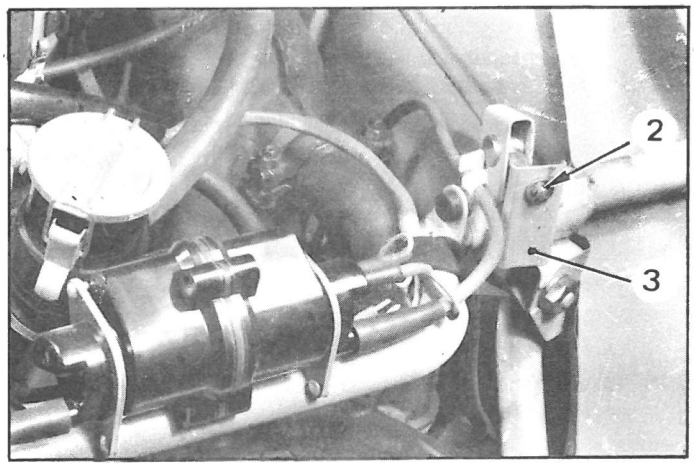

4735

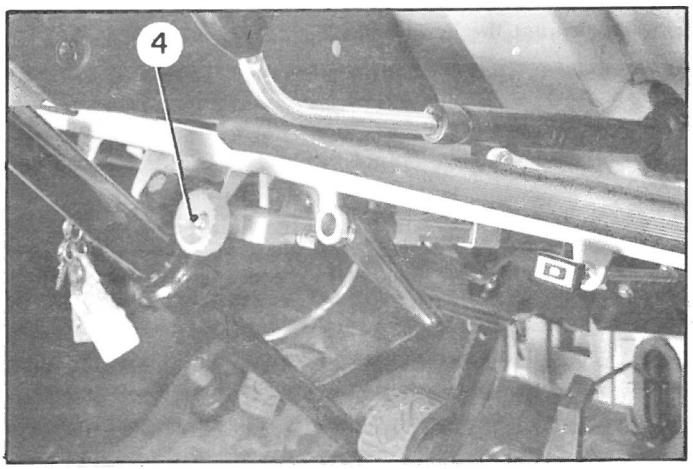

3928

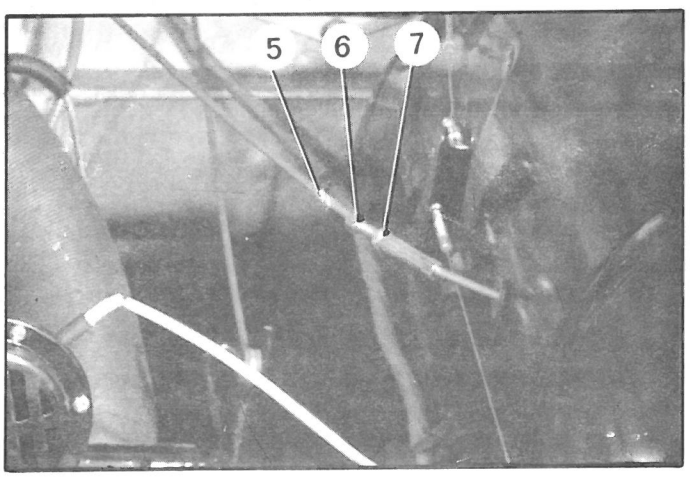

NOTE : A manual control is provided for correcting the headlamp setting according to the vehicle load. However, it is necessary to carry out an initial adjustment with the car in running order (vehicle empty except for the tool kit, the spare wheel and 5 litres (1 gallon) of petrol in the tank).

A. HEADLAMP CONTROL (RODS).
(AZ Vehicles)

1. **Check the lateral play of the manual control :**
If necessary, insert washers (2) until the clearance between the control lug (3) for headlamp bracket and the first washer is 0.5 mm (0.019 in).

2. **Adjust the headlamps :**
a) Put the vehicle on a flat horizontal ground.
b) Turn the control knob (1) from left to right as far as it will go.
Turn the knob from right to left by two and a half turns.
c) Make sure that the tyres are correctly inflated and the heights are correctly adjusted. The headlamp setting must be carried out using a « REGLOSCOPE », « REGLOLUX » or similar instrument.
Tighten nut with ball-joint of the headlamp bracket.
Check that the instrument and the vehicle are on the same level

B. HEADLAMP CONTROL (CABLES).
(AY Vehicles)

3. **Adjust the flexible cable of each headlamp :**
a) Make sure that the flexible cables (5) are not kinked.
b) Turn the control knob (4) clockwise until it locks.
c) Place the headlamp unit on its stop.
For that matter :
- Slacken the lock nut (7).
- Gradually unscrew tensioner (6) until the headlamp unit is fully in.
(To make sure that this operation has been correctly carried out, press the top of the headlamp unit).

4. **Adjust the headlamps :**
a) Place the vehicle on a flat horizontal ground, and make sure that the tyres are correctly inflated and the heights are correctly adjusted.
b) Make sure that the control knob (4) has been screwed fully in.
c) The headlamp setting must be carried out with an instrument like « REGLOSCOPE » or « REGLOLUX », by tightening the screws located under the headlamp flange :
- upper screw for height adjustment,
- lower screw for direction adjustment.

5151

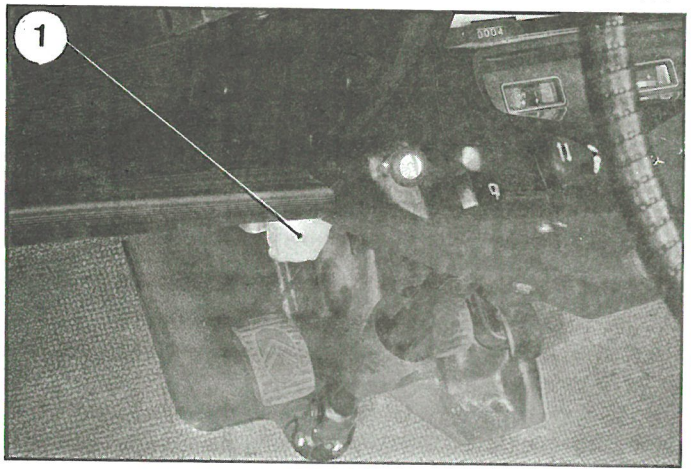

5134

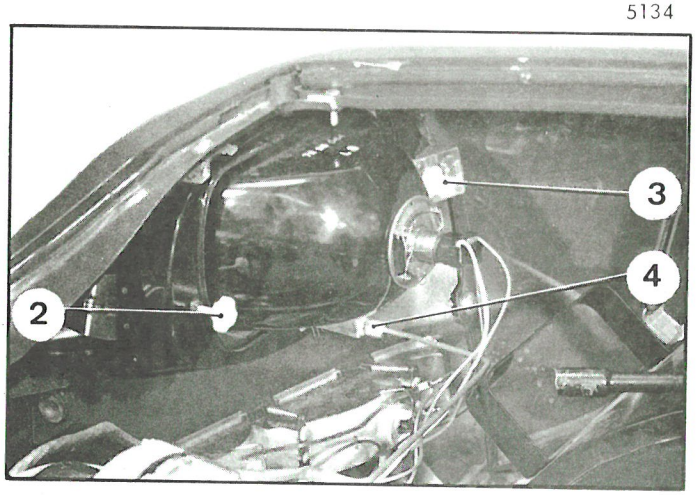

C. HEADLAMP CONTROL :

(AM vehicles)

NOTE : A manual control is provided for correcting the headlamp setting according to the vehicle load. However, it is necessary to carry out an initial adjustment with the car in running order (vehicle empty except for the tool kit, the spare wheel and 5 litres (1 gallon) of petrol in the tank).

Adjustment to be carried out using an instrument like « REGLOLUX » or « REGLOSCOPE ».

1. Make sure that the tyres are correctly inflated and the heights correctly adjusted.

2. Put the vehicle on a flat horizontal ground.

3. Turn the control knob (1) fully to the left.

4. Screw the adjustment knobs (2) and (3) in by half of their thread length.

5. Place the instrument opposite to the headlamp unit (the setting instrument and the vehicle must be on the same level).

6. **Adjust the headlamps :**

a) *Height adjustment :*
- Switch the headlamps on « dipped beam ».
- Using the knurled knob (4), adjust the height of the beam. Its upper limit must reach the instrument in the indicated area.

b) *Direction adjustment :*
- Switch the headlamps on « main beam ».
  By simultaneously turning the knobs (2) and (3) (in opposite direction, but by the same amount), bring the centre of the light spot on the appropriate mark of the setting instrument.

7. Adjust the other headlamp.

NOTE : In case there is a dark area in the middle of the beam, replace the bulb.

A. REMOVING AND FITTING THE WINDSCREEN WIPER COMPONENTS

(AZ and AY vehicles)

PL. 597

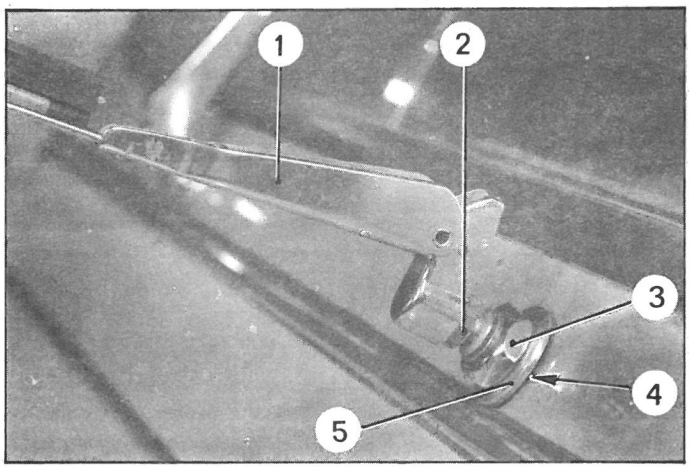

3252

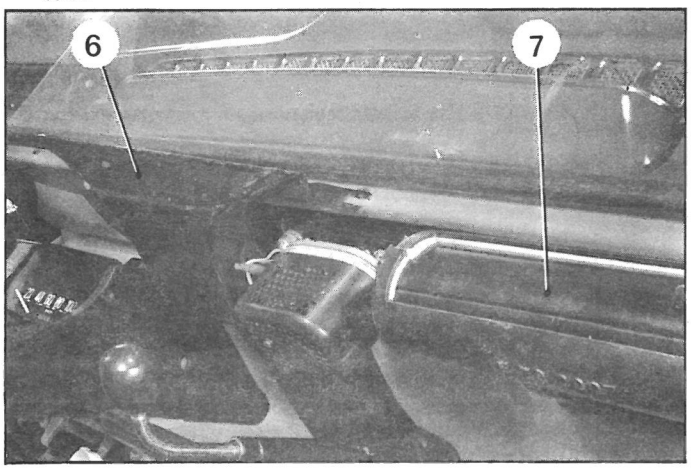

PL. 598

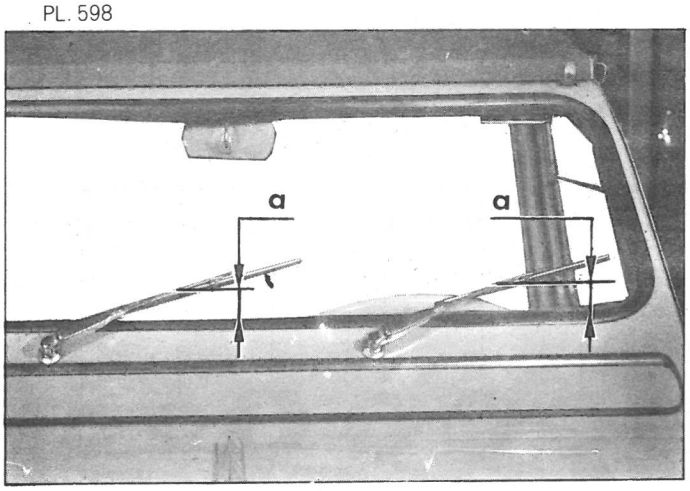

I. Removing and fitting a windscreen wiper bearing plate.

REMOVAL.

1. Disconnect the negative cable from the battery.

2. Remove the wipers (1) from their splined shaft (2) as well as nuts (3), washers (5) and gaskets (4).

3. Remove the dashboard panel.

4. Release defrosting nozzle (6) *(on AY vehicles, remove it as well as R.H. side swivelling vent (7).*

5. Disconnect the supply leads of the motor.

6. Remove the two lower bolts of the bearing plate and release it, without forcing on the shafts.

FITTING.

7. Fit the bearing plate : insert the shafts in the scuttle panel and fix the earth of the engine under a lower securing screw.

8. Fit gaskets (4) and washers (5) on shafts (2) of wiper arms (1).

Slightly tighten nuts (3).

9. Connect the supply leads to the motor.

10. Fit R. H. side swivelling vent (7) *(AY vehicles)* and defrosting nozzle (6).

11. Fit the dashboard panel.

12. Connect the negative cable to the battery.

Start the motor *(without the wipers)* and let it stop in the "automatic stop" position.

13. Fit the wiper arms (1) on the splined shafts (2), the wiper shaft being located at a distance "a" of the windscreen rubber upper edge.

$a = 50 \begin{smallmatrix} +5 \\ 0 \end{smallmatrix}$ mm *(AY vehicles)*

$a = 37 \begin{smallmatrix} 0 \\ -0.5 \end{smallmatrix}$ mm *(AZ vehicles)*

II. Removing and fitting a windscreen wiper motor.

3250

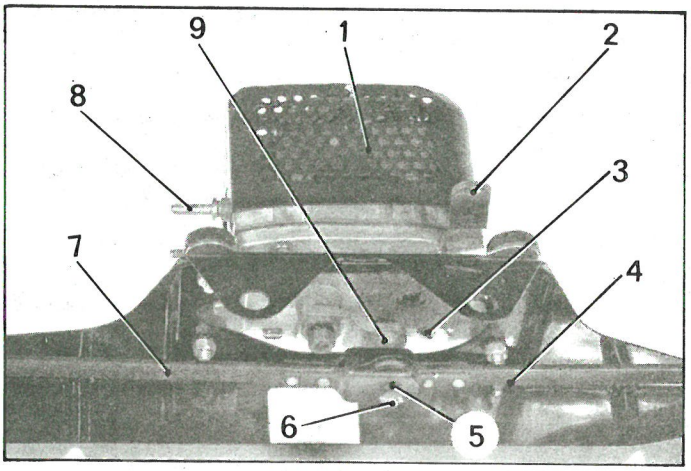

REMOVAL.

1. **Removing the windscreen wiper bearing plate :** *(See Chapter I. same operation).*
2. Open spring (6) and remove the linkage articulation.
3. Remove the two screws (3) and release motor (1) with its bracket from the bearing plate.

FITTING.

4. Fit the motor bracket on the bearing plate, with terminals (8) orientated towards the left. Place earth (2) under R.H. securing screw (3).
5. Grease the articulation of the linkage and fit linkage (7) (distance between centres : 195 mm (7.6 in.) on control lever axle (9), on the L.H. side, and linkage (4) (distance between centres : 175 mm (6.8 in.) on the R.H. side. Fit plain washer (5) and spring (6).

III. Removing and fitting a wiper arm shaft

PL. 593

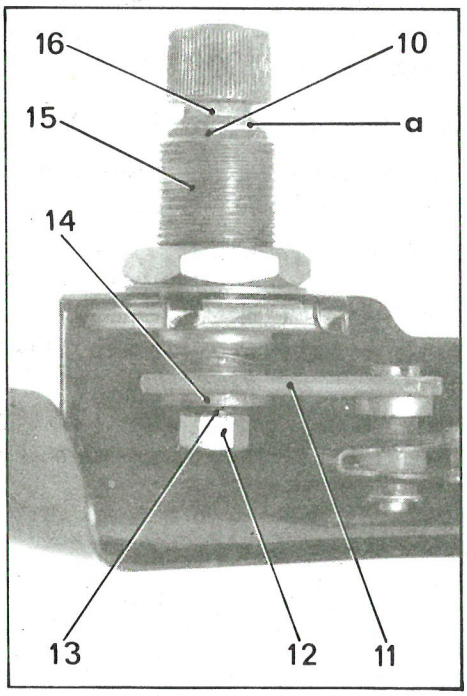

REMOVAL.

1. **Remove the windscreen wiper bearing plate.** *(See Chapter I, same operation).*
2. Loosen nut (12) of shaft (16).
3. Release the washers, the gaskets and link rod (11) without uncoupling the linkage.
4. Release shaft (16) and gaskets (10) and (21) from bearing (15).
5. Clean the parts.

FITTING.

6. Grease shaft (16) with a rust preventive oil.
7. Fit gaskets (10) and (21) on shaft (16) : gasket (10) under flange "a" and gasket (21) in groove "b".
8. Fully insert shaft (16) in bearing (15) and fit in the following order : celoron washer (20), corrugated washer (19), celoron washer (18), plain washer (17), link rod (11), plain washer (14), serrated washer (13) and nut (12).

PL. 594

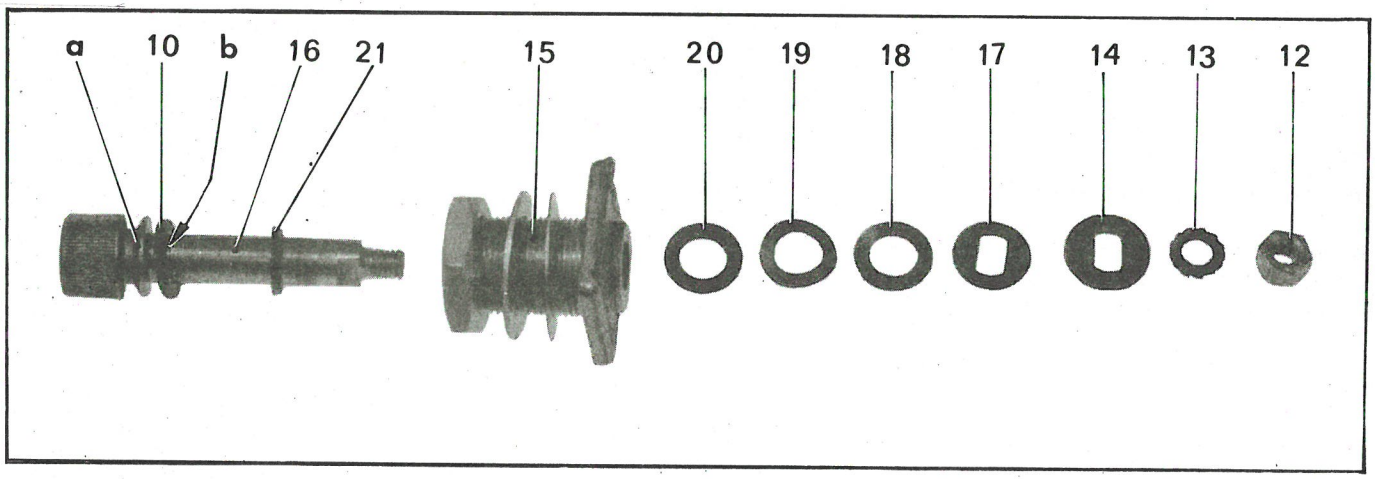

5149

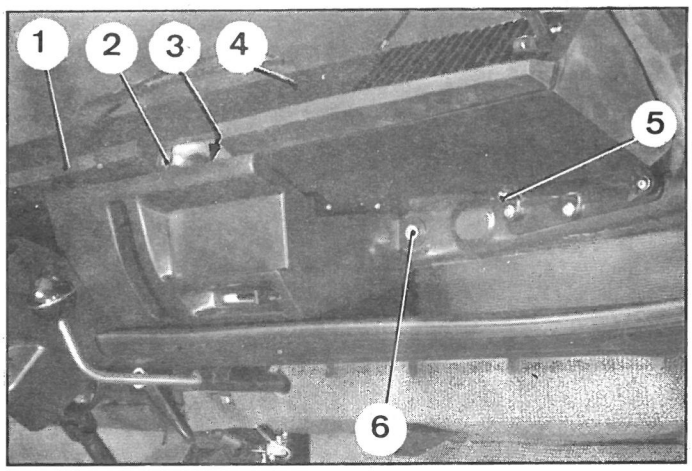

5148

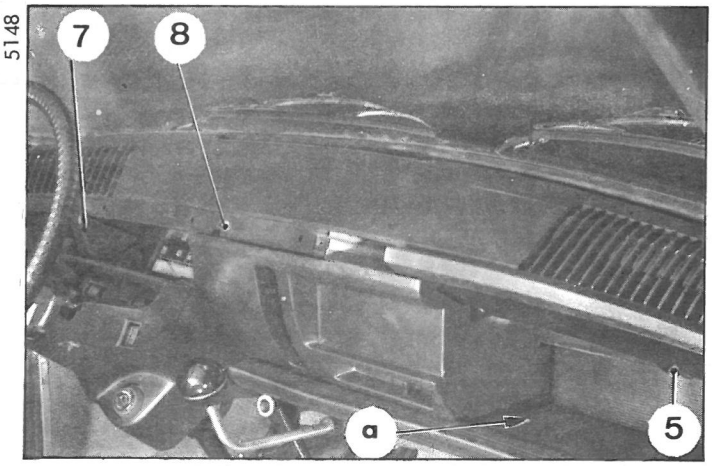

5173

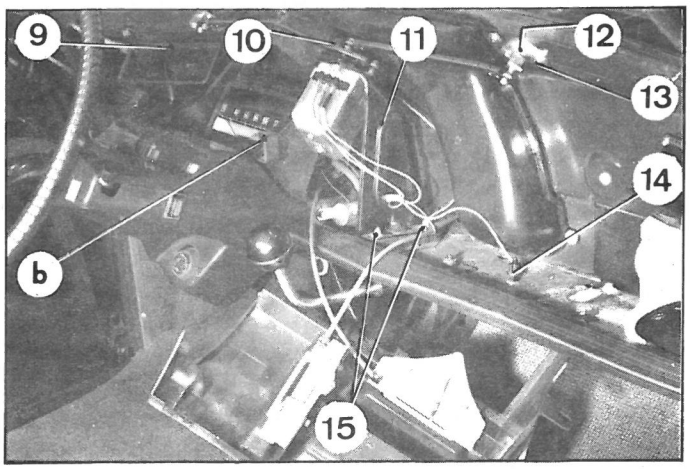

4836

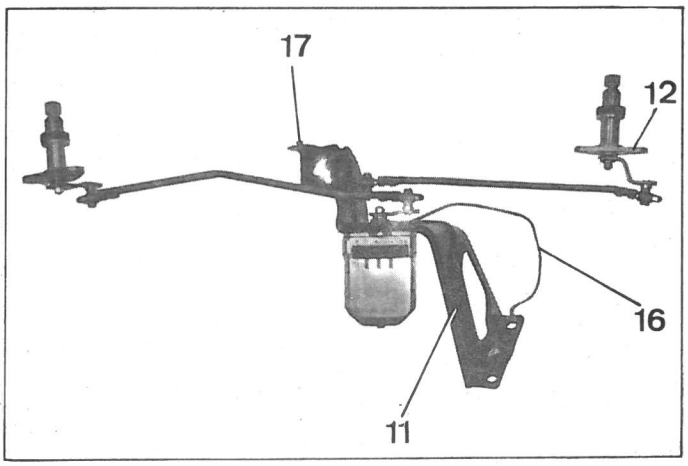

B - REMOVING AND FITTING WINDSCREEN WIPER COMPONENTS *(AM vehicles).*

I. Removing and fitting a windscreen wiper unit

REMOVAL.

1. Disconnect the earth cable from the negative terminal of the battery.
2. Remove the wipers. Swing them towards the front so as to unlock them and release them from their splined shaft.
3. Remove securing nuts of wiper shaft brackets. Release the incurved washers and sealing rubbers.
4. Remove side trimming (7) after removing press studs.
5. Remove upper part (4) of the dashboard :
   - Remove screw (2) and shock-proof panel (1).
   - Remove screws (8) and (3).
   - Loosen the five other securing screws (5) without removing them (three on the R.H. side and two on the L.H. side).
   - Release the upper part of the dashboard.
6. Remove screw (6), securing bolt at "a" on the scuttle panel, securing screw at "b" on the dashboard centre part.
   Release the centre part of the dashboard with its heater controls from the scuttle panel.
7. Remove L.H. side swivelling vent (9).
8. Remove the two screws (13) securing the brackets of the wiper shaft.
9. Disconnect the three leads supplying the windscreen wiper motor and the lead supplying accessory terminal (14).
10. Remove bracket (11) of the windscreen wiper unit :
    - Remove bolt (10), the two nuts (15) and free the two earth wires.

    Release the harness of the windscreen wiper bracket.
    Release the pin for positioning the bracket on the scuttle panel.
    Release the bracket harness and release the bracket and windscreen wiper control unit.

FITTING.

11. Fit the bracket and windcreen wiper control unit and position it on scuttle panel, using pin (17).
12. Fit bolt (10) (lugged contact washer under the nut), the two nuts (15) (lugged contact washers) inserting the earth wire (16) of the windscreen wiper motor and the earth wire of the harness between the nut and the washer.
13. Connect the three leads supplying the windscreen wiper motor : the lead in the black sleeve to terminal " + ", the lead in the blue sleeve to terminal "IN" the lead in the white sleeve to terminal "AR".
    Connect the lead in the black sleeve to the accessory terminal.

5173

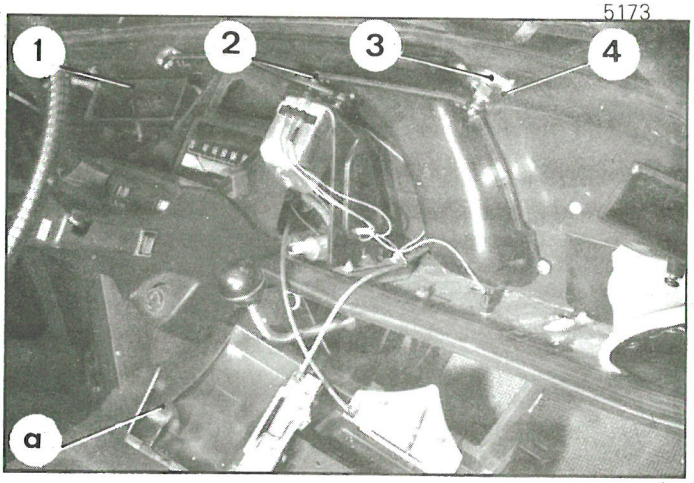

5148

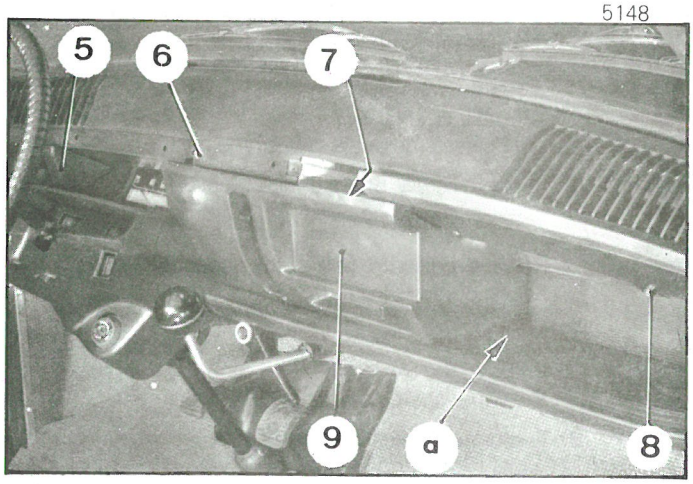

5149

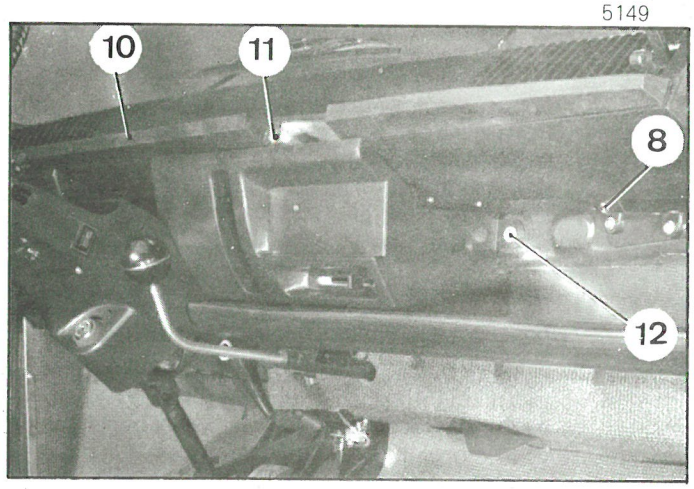

5156

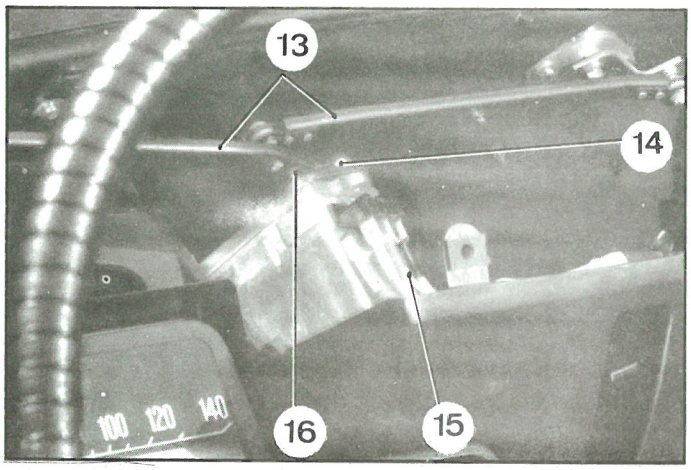

14. Position each bracket (3) of wiper shaft in its housing, tighten the two securing screws (4).
15. Fit L.H. side swivelling vent (1).
16. Fit the centre part of the dashboard. Tighten securing screw (12), the bolt at (b) on the scuttle panel, the screw at (a).
17. Fit the upper part of the dashboard.
    Fit screws (6) and (7). Tighten screws (12) unscrewed when the dashboard has been removed (three on the R.H. side, two on the L.H. side).
18. Fit noise proof panel (10). Tighten screw (11).
19. Fit side trimming (5). Fit the two press studs.
20. Fit the sealing rubbers and the incurved washers on the wiper arms. Slightly tighten the nuts.
21. Connect the earth cable to the negative terminal of the battery.
22. Swith on the ignition for a few seconds and switch it off (in "automatic stop" position).
23. Fit the wiper arms and correctly position them.

II. Removing and fitting a windscreen wiper motor.

REMOVAL.

1. Disconnect the earth cable from the negative terminal of the battery.
2. Remove the windscreen wipers.
3. Remove the upper part of the dashboard.
   (See Chapter B-I., para. 4 and 5 - same operation).
4. Disconnect leads (15) supplying the motor.
5. Remove nut (16) securing the control lever of the linkages (13). Release the linkages-control lever unit, the shim and the sheet metal washer from the motor shaft.
6. Remove the two screws (14) and release the earth lead.
   Release the windscreen wiper motor.

FITTING

7. Bring the windscreen wiper motor on its bracket. Tighten the two securing screws (14) inserting the terminal of the earth lead between the screw head and the washer (serrated washer).
8. Fit the sheet metal washer and the shim on the motor shaft.
9. Fit the control lever, orientating it correctly (if necessary, act upon the linkages.) Tighten nut (16).
10. Connect the leads supplying the motor.
    (See Chapter B-I., para. 13 - same operation).
11. Connect the earth cable to the negative terminal of the battery.
12. Switch the ignition on, in order to bring the wiper shafts in the "automatic stop" position, then switch it off

13. Fit the windscreen wipers.
14. Fit the upper part of the dashboard.
(See Chapter B-I., para. 17 and 19 - same operation).
15. Check the correct operation of the windscreen wiper.

III. Removing and fitting a wiper shaft bracket with the shaft.

5156

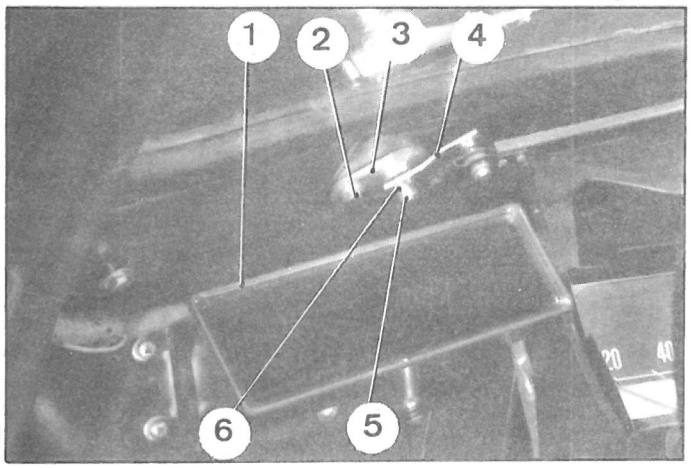

REMOVAL.

1. Remove the upper part of the dashboard.
(See Chapter B-I., para. 4 and 5 - same operation).
2. Remove swivelling vent (1) on the side where the bracket must be replaced.
3. Remove the windscreen wiper.
4. Remove nut (5) fixing the control lever on the wiper shaft.
Release spacer (6) and control lever (4) with its linkage.
Refit the spacer and the securing nut.
5. Remove shaft bracket (3) with the shaft.
Remove the two screws (2) fixing the bracket.
Release bracket (3).

FITTING.

6. Fit shaft bracket (3) with the shaft (during this operation, do not remove nut (5) in order to avoid losing the various washers).
Tighten the two securing screws (2) (lugged contact washer).
7. Remove nut (5) and spacer (6).
Fit control lever (4) on the wiper shaft, and fit the spacer.
Tighten securing nut (5).
8. Fit the windscreen wiper.
9. Fit swivelling vent (1).
Fit the upper part of the dashboard.
(See Chapter B-I., para. 17 to 19 - same operation).

4837

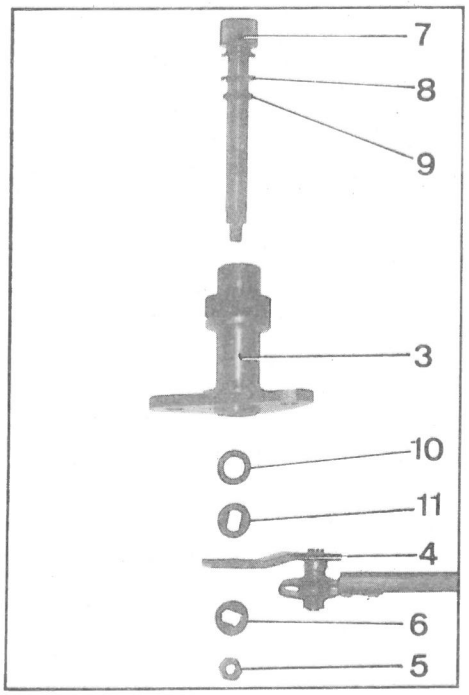

IV. Greasing a wiper shaft.

REMOVAL.

1. Remove the windscreen wiper.
2. Remove the upper part of the dashboard.
(See Chapter B-I., para. 4 and 5 - same operation).
3. Remove nut (5) fixing control lever (4) on wiper shaft.
Release spacer (6), control lever (4) with its linkage, sheet metal washer (11), expanding washer (10).
4. Release wiper shaft (7) from its bracket.
5. Grease the shaft with a rust preventive oil.

FITTING.

6. Fit the wiper shaft fitted with sheet metal washer (8) and O-ring seal (9) in bracket (3).
7. Fit expanding washer (10), sheet metal washer (11), control lever (4) and spacer (6) on the shaft. Tighten nut (5).
8. Fit the upper part of the dashboard.
(See Chapter B-I., para. 17 to 19 - same operation).
9. Fit the windscreen wiper.

OPERATION N° A. 614-00 : *Fitting the hazard warning signal (Vehicles All Types 6 and 12 Volts)*

FITTING A HAZARD WARNING SIGNAL

Procure from the Replacement Parts Department :

One hazard warning signal outfit ..... ZC. 9 858 176 U

1. Disconnect the earth lead from the battery.

2. Remove the dashboard (1).
(See operations AZ. 520-1 and AZ. 520-1 a).

12 095

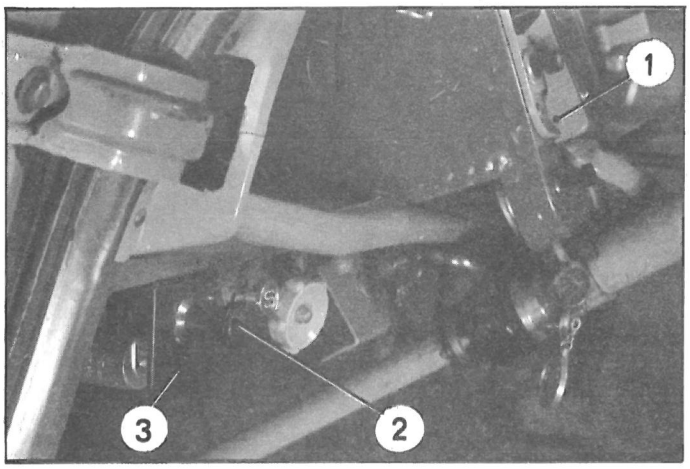

3. Thread the warning signal leads (with the exception of the earth lead, black lead) with the speedometer cable in order to achieve the connections as indicated on the diagram supplied with the warning signal :
« + » **battery terminal** : to the ignition switch lead (black terminal),
- **Left and right-hand direction indicator lamps :** to green and yellow direction indicator control leads.
- **Earth** : (black lead) to the right-angle bracket (3).

4. Unscrew the warning lamp knob (2) to fix the right-angled bracket (3).
Pierce two holes, and secure the bracket (3) and the earth wire with two self tapping screws as shown opposite.
Fix the hazard warning signal on the right-angled bracket (3) by screwing in knob (2).

5. Refit the dashboard (1).

6. Connect the earth lead to the battery.

FITTING OF A HAZARD WARNING SIGNAL

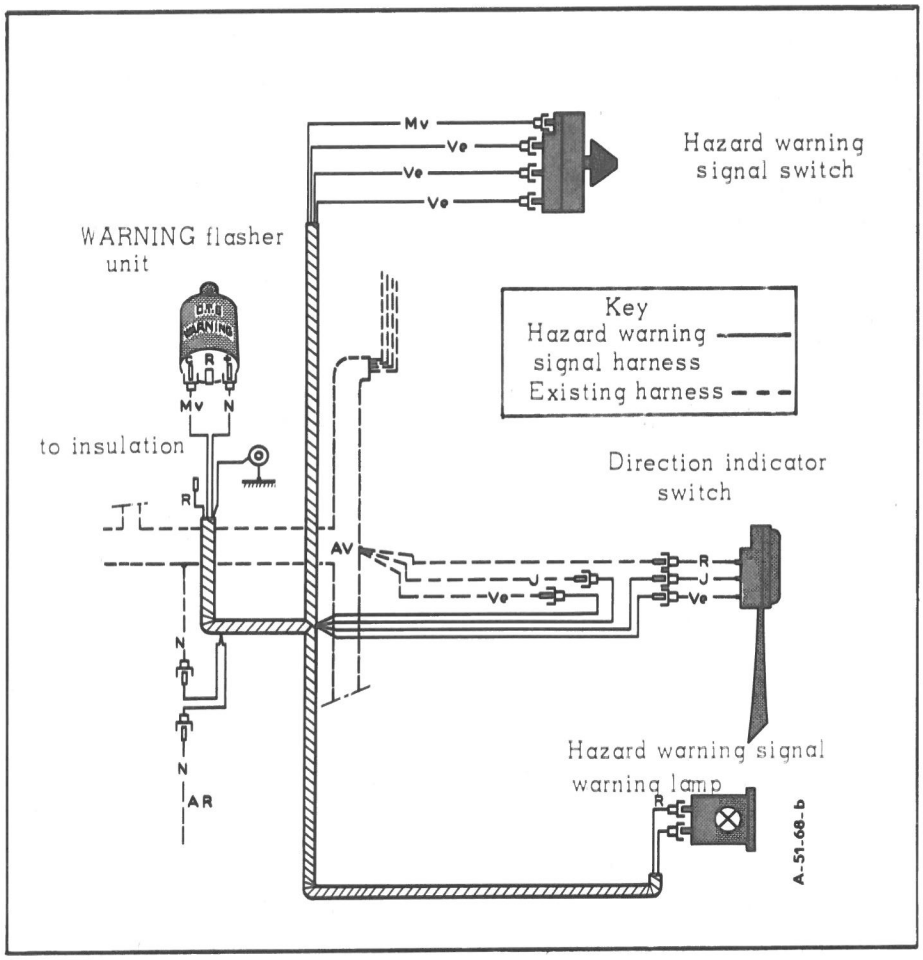

Procure from the Replacement Parts Department :

Hazard warning signal outfit ..... ZC 9 858 139 U

Preparation :

- Drill a hole 10.5 mm in diameter, in the dash panel, under the speedometer, for fixing the warning lamp for the hazard warning signal.
- Drill a hole 16 mm in diameter, next to the above mentioned hole, for fitting the hazard warning signal switch; make a notch to prevent the switch from rotating.

Dismantling :

- Disconnect the earth lead from the battery.
- Remove the speedometer to gain access to wiring.

Fitting :

1) Thread the hazard warning harness across the scuttle.
2) Fix « WARNING » flasher unit next to the direction indicator unit.
3) Connect the hazard warning signal harness terminals :
   - female clip (black) to « + » terminal of « WARNING » flasher unit.
   - female clip (violet) to the « COM » terminal of « WARNING » flasher unit
   - male clip (red) to insulation
4) Disconnect the Black plugs from the front harness, at its junction with the rear harness (left of the scuttle) and mount them with their opposite numbers on warning signal harness.
   Fix the earth terminal of the hazard warning signal harness with the other terminals on the scuttle.
5) Disconnect the Yellow and the Green plugs from the direction indicator switch under the speedometer, and connect them with their opposite numbers on the hazard warning signal harness.
6) Connect the three Green leads and the Violet lead of the hazard signal harness to the hazard warning signal switch and fix the switch.
7) Connect the Red female clip and unmarked female clip, to the hazard warning signal and fix the latter.
8) Refit the speedometer and the battery earth lead.

FITTING A HAZARD WARNING SYSTEM

Procure from the Replacement Parts Department :

Hazard warning oufit ..... ZC. 9 858 140 U

Dismantling :

Disconnect the earth lead from the battery.
Remove the switch bracket cover, upper ledge of the dashboard and edge pieces of the speedometer.
Disconnect the starter motor switch, the warning lamp and parking lamp switch, and remove them

Preparation :

Drill a 10.5 mm hole in the upper ledge of the dashboard, next to the other warning lamp (or remove grommet on Dyane 4).

Fitting :

Fit the warning signal switch and the flasher unit (fixed on the left hand screw of the defrosting nozzle).
Thread the hazard warning signal harness and connect as shown in the diagram below.
Fit the upper ledge of dashboard and connect warning lights and switch.
Refit edge pieces of speedometer and switch bracket cover.
Reconnect the earth lead to the battery.

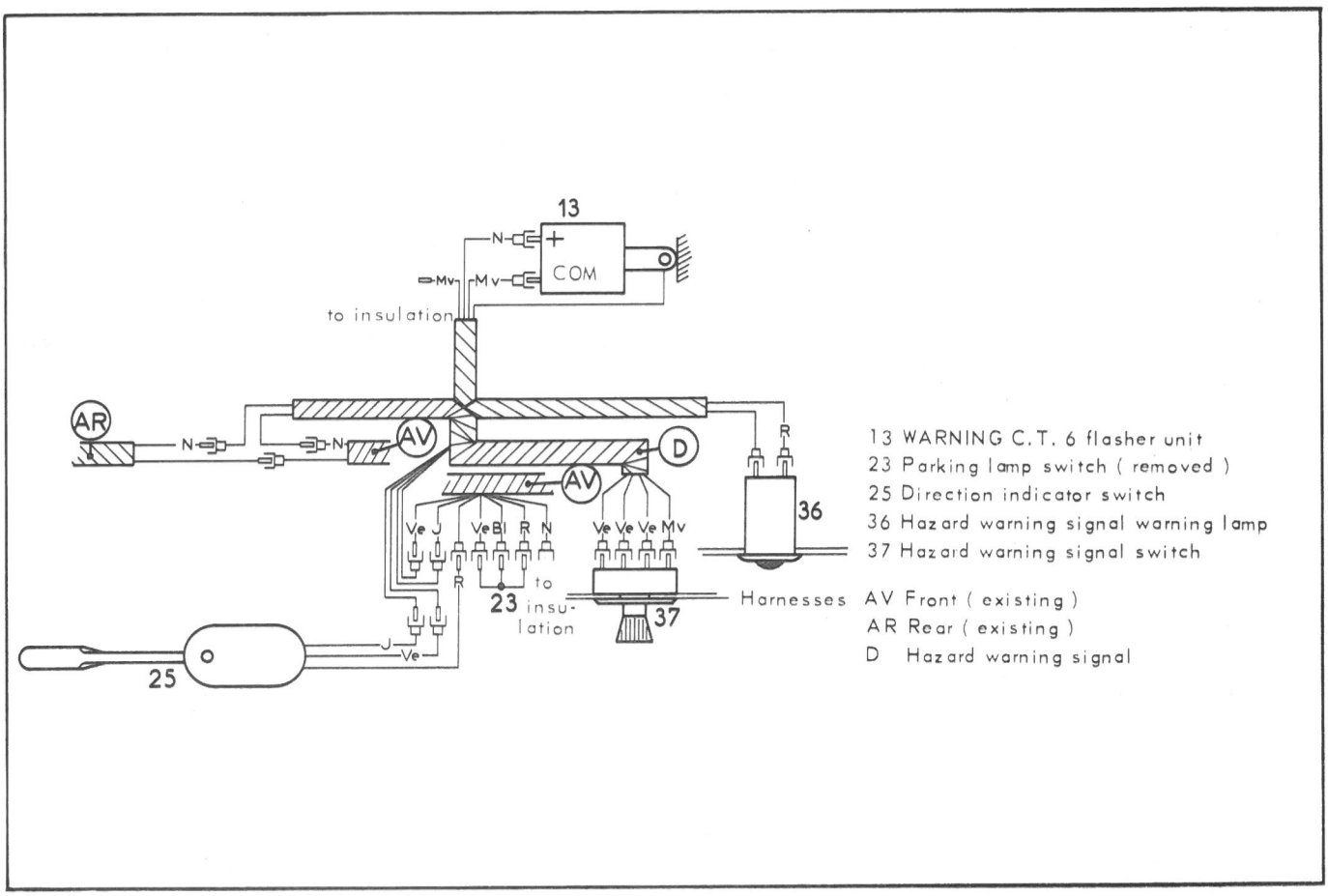

NOTE : If the parking lamps are retained, drill a hole in any desired position for fixing the hazard warning signal switch, and elongate the connecting wires.

FITTING HAZARD WARNING SIGNAL

Procure from the Replacement Parts Department :

Hazard warning signal outfit ..... ZC. 9 858 189 U

DISMANTLING.

Disconnect the negative lead from the battery.
Remove the dashboard side panels the switch bracket cover and the upper ledge of dashboard. (First disconnect the windscreen wiper switch and the oil pressure warning lamp).

PREPARATION.

Form an opening 20 × 30 mm in the position marked on the back of upper ledge of the dashboard, next to the windscreen wiper switch.
Drill a hole 10.5 mm in diameter, in the upper ledge of the dashboard, in the position marked on the reverse side of the latter.
Fix the warning lamp for the hazard warning signal and the switch on the dashboard ledge.

FITTING.

Fix the flasher unit with the left hand defrosting nozzle fixing screw, placing the earth terminal under the screw.
Insulate the male connector (Mauve) of the hazard warning signal harness.
Connect to the Black connectors to the harness, at junction point behind the speedometer.
Thread wires (marked Yellow and Green) under the speedometer, and connect them at junction of harness and the direction indicator switch.
Position the upper ledge, connect the switches and the warning lamps and fit them.
Fit the switch bracket cover and the dashboard side panels.
Connect the earth lead to the battery.

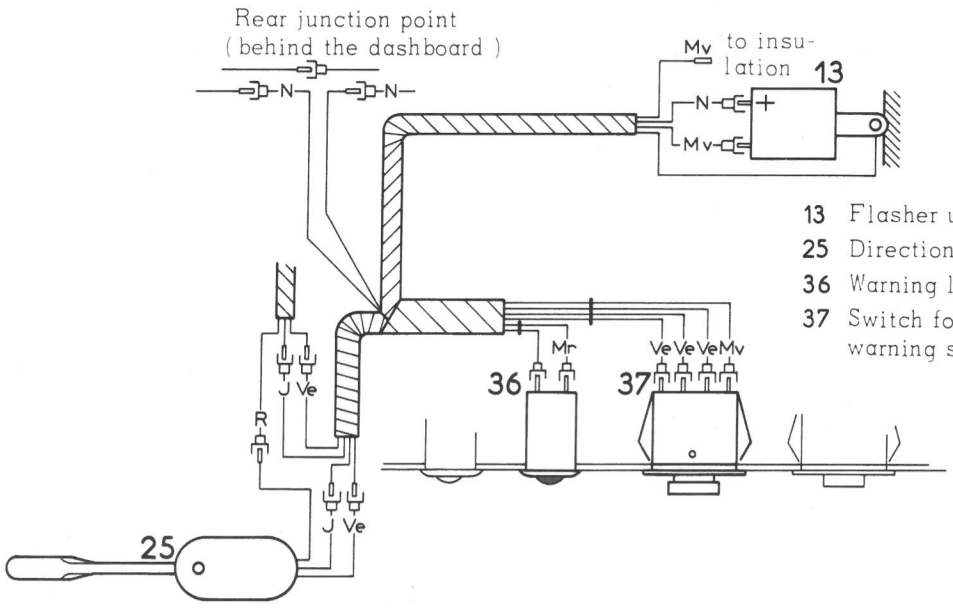

LIST OF SPECIAL TOOLS MENTIONED IN THE THIRD SECTION OF MANUAL 816-2

DESCRIPTION	NUMBERS Repair - Method	REFERENCE of tool on sale
(2) FUEL SYSTEM		
Outfit for testing petrol pump	.....	4005-T
(3) IGNITION		
Rod for setting the ignition point	MR. 630-51/15	
(4) ELECTRICAL		
Battery terminal lug extractor	.....	2200-T
Fan extractor	.....	3006-T a
Dynamo armature extractor (6 volts)	.....	2205-T

FREE SUBSCRIPTION TO CORRECTIVE SHEETS to REPAIR MANUALS

Buying a document does not automatically imply the registration on the subscribers lists (even if the document had been included in a systematic distribution).

To benefit from the subscription, the application form (below) must be filled in immediately on receipt of the document, and sent to the address mentionned on this form.

SUBSIDIARIES

The Branches and Import Dealers of the Citroën Network are the only ones who are entitled to benefit from it.
The corrective sheets of the documents they have sold must be distributed by themselves to the users.

WORDING OF THE SUBSCRIPTION APPLICATION

SUBSCRIBER NUMBER :

Each member of the Citroën Network has been attributed a subscriber number which he should write down on the application form.
This number is printed on the label of each envelope containing the technical bulletins.

SUBSCRIBER CATEGORIES : 3 = Branch - 6 = Import Dealer

QUANTITY :
If several copies of the same document have been received, only one application form should be filled in, by indicating the number of copies.



APPLICATION FORM for SUBSCRIPTION TO CORRECTIVE SHEETS

TO BE FILLED IN BY THE USER

Factory use only

Code Mvt : D 5 O b

No. bordereau :

5 11

Date : .....

DOCUMENT REFERENCE : MAN0081 62

QUANTITY : .....
Document :

SUBSCRIBER No. : (8 digits - no letter)

Factory use only
letter

CATEGORY : *subscriber*

Sections below : Your trade mark ink-stamp should be used by preference. If not, write in block letters.

NAME or trade name : .....
Address : .....
.....
TOWN : .....
COUNTRY : .....

Please forward this form to the following address : Automobiles CITROËN
Informatique Abonnements - B.P. 306
92302 LEVALLOIS - PERRET CEDEX
FRANCE